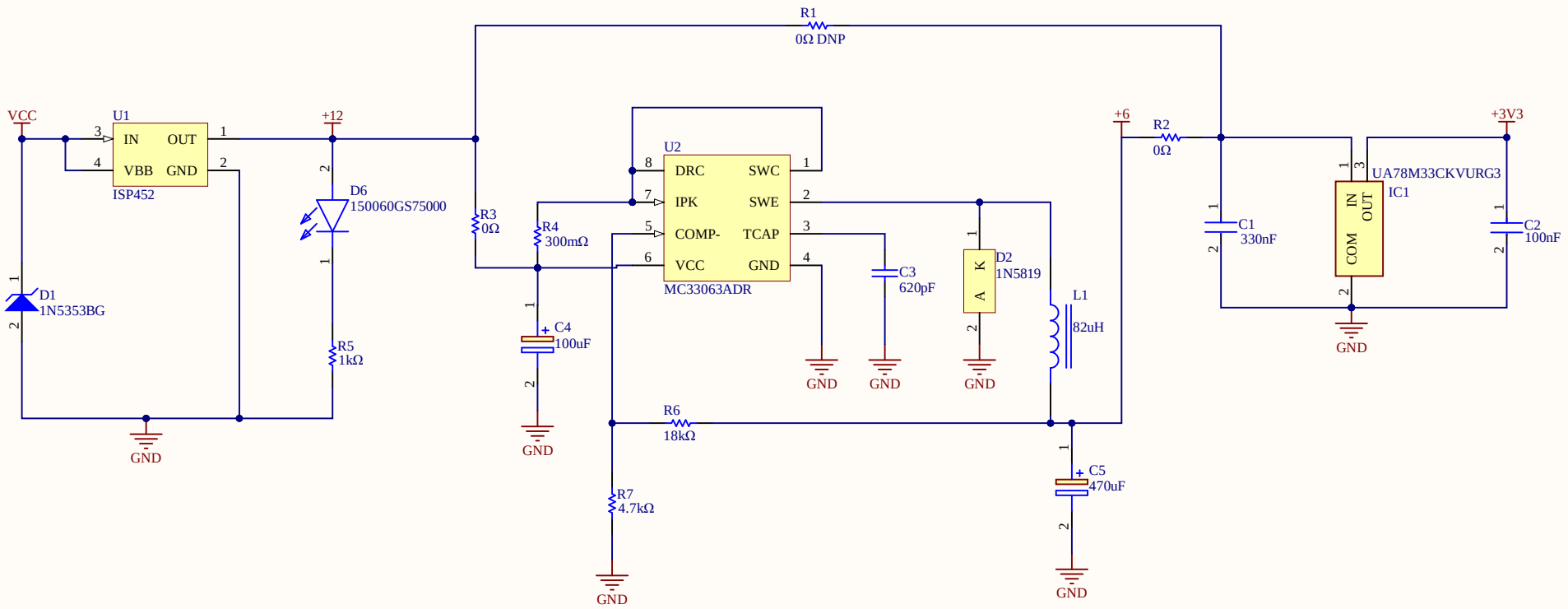

Title		
Power Stage		
Size: A4	Number	Revision
Date: 4/20/2026	Sheet of	
File: C:\Users\..\PowerStage.SchDoc	Drawn By:	

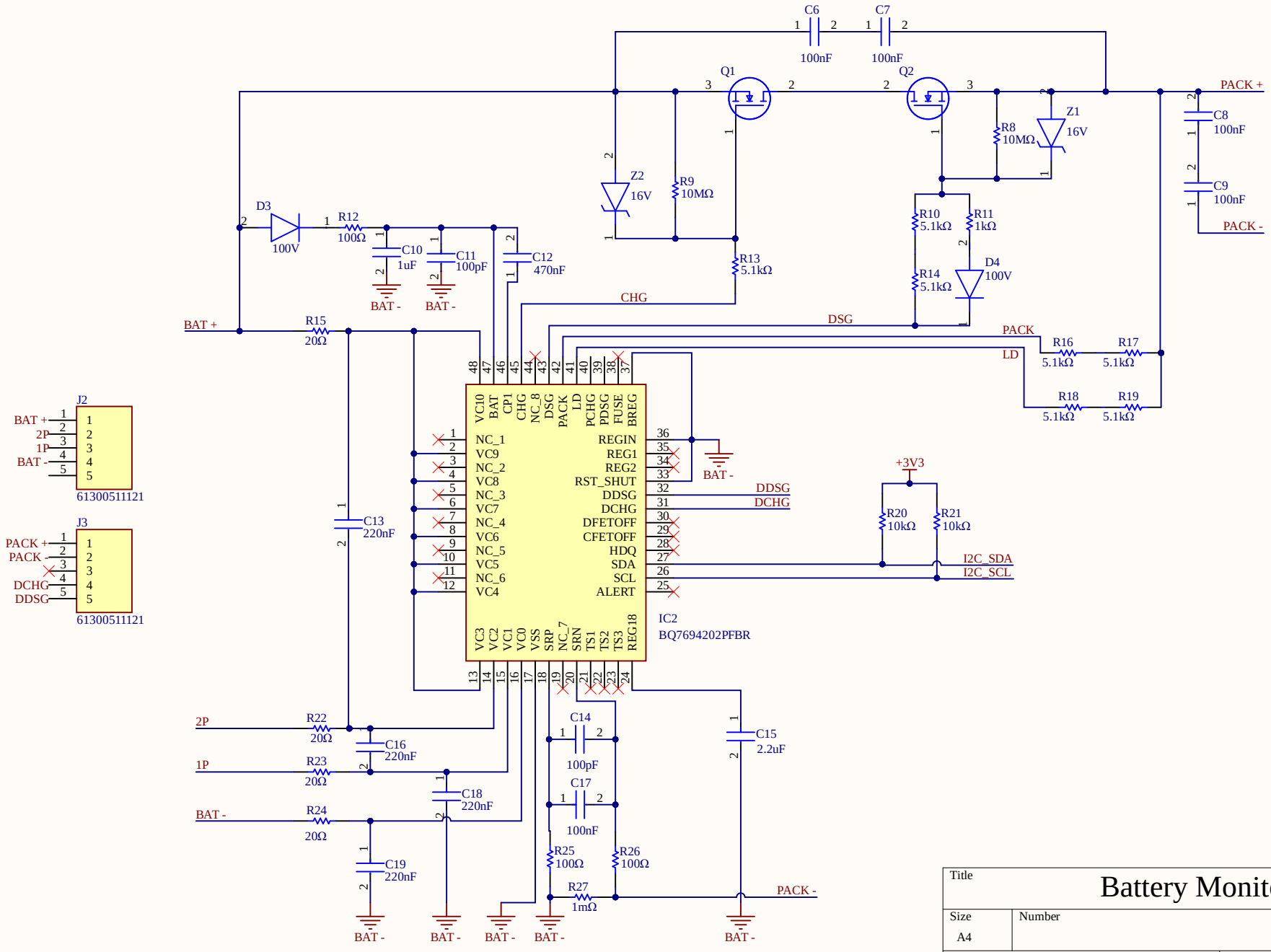

Title	Battery Monitor	
Size A4	Number	Revision
Date: 4/20/2026	Sheet of	
File: C:\Users\..\BatteryMonitor.SchDoc	Drawn By: Jeffrey Chandy	

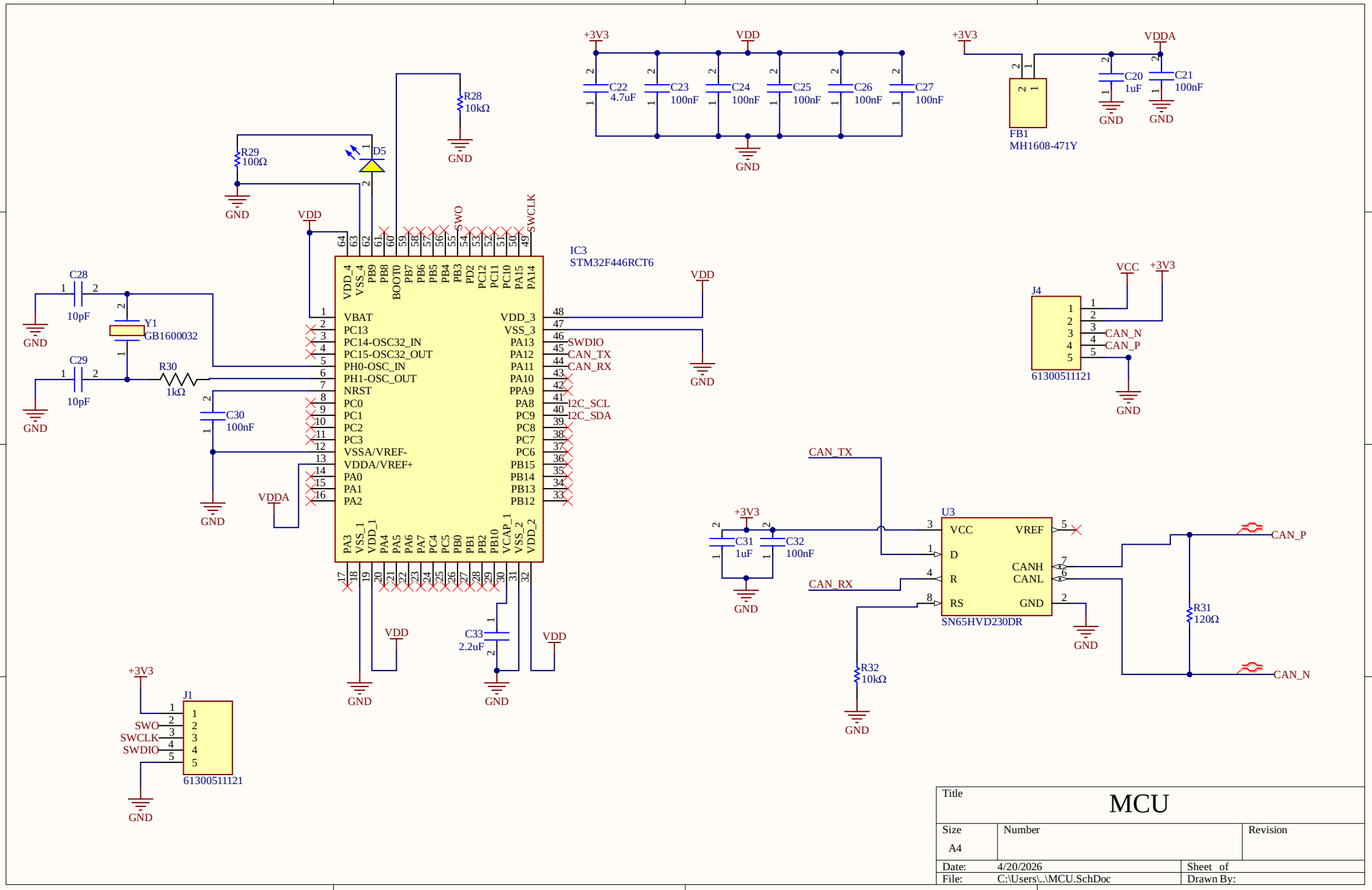

Title	MCU	
Size A4	Number	Revision
Date: 4/20/2026		Sheet of
File: C:\Users\..\MCU.SchDoc		Drawn By: