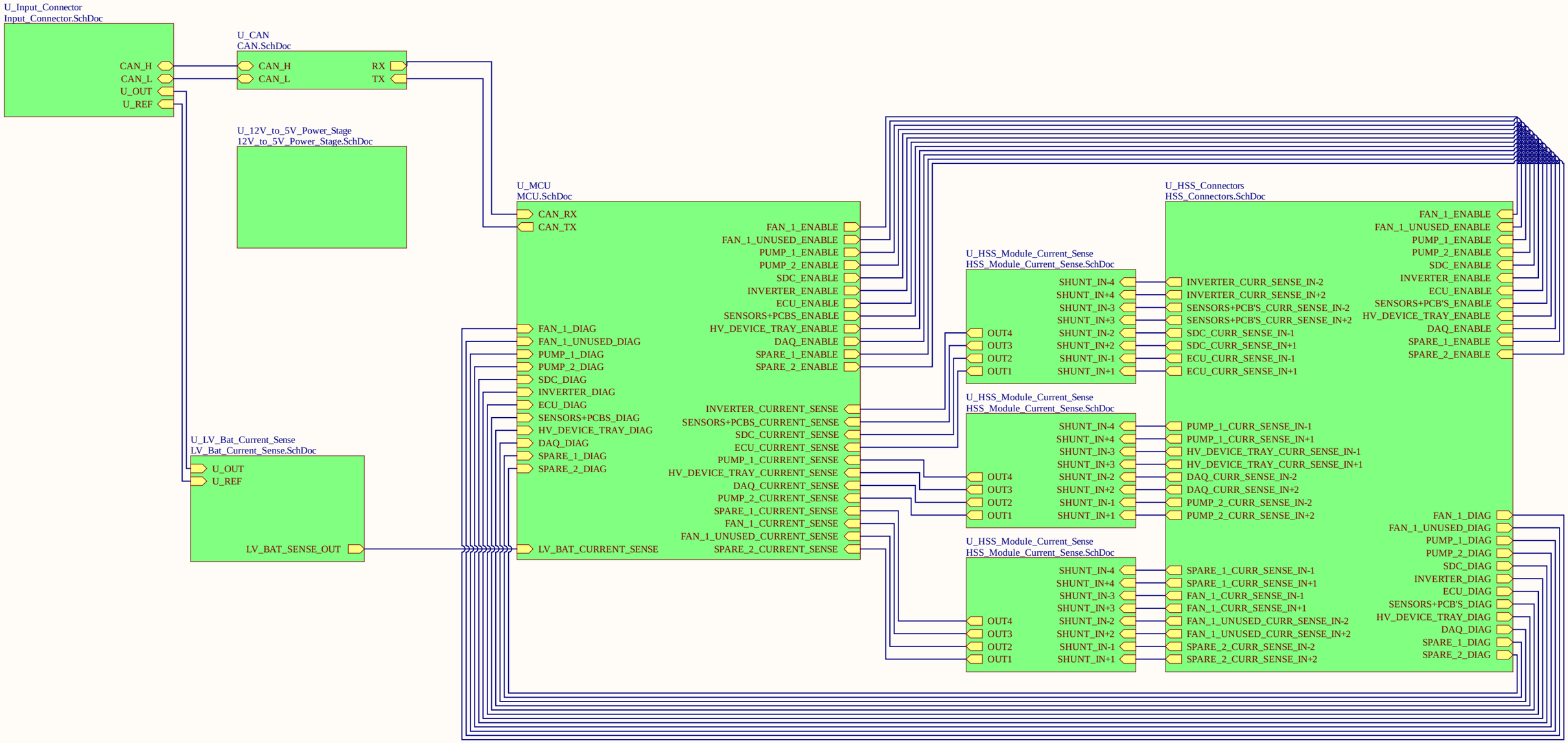

Title	High Level Schematic	
Size A3	Number	Revision
Date: 4/23/2026		Sheet of
File: C:\Users\..\Overview.SchDoc		Drawn By:

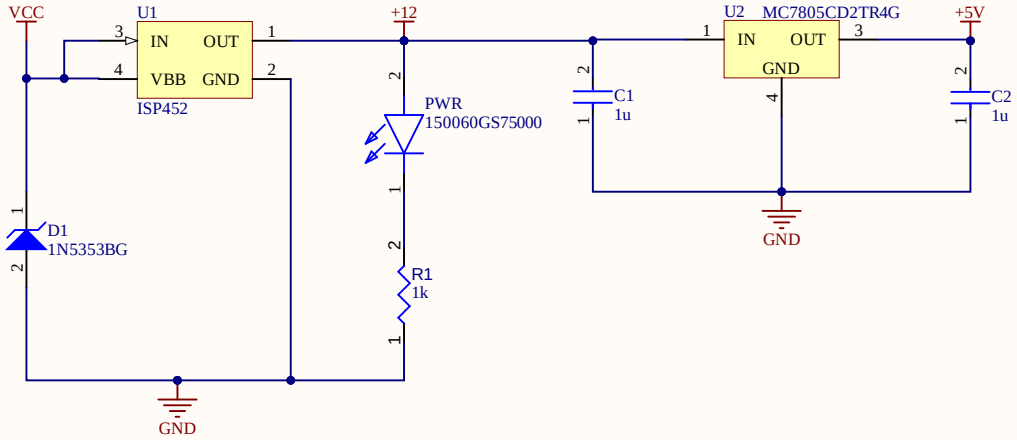

A high side switch and low dropout voltage regulators are used to ensure a clean power supply at the cost of efficiency. As a low power board efficiency is of only minor importance.

Title	12V_to_5V_Power_Stage		
Size A4	Number		Revision
Date:	4/23/2026	Sheet of	
File:	C:\Users\..\12V_to_5V_Power_Stage.SchDoc	Drawn By:	

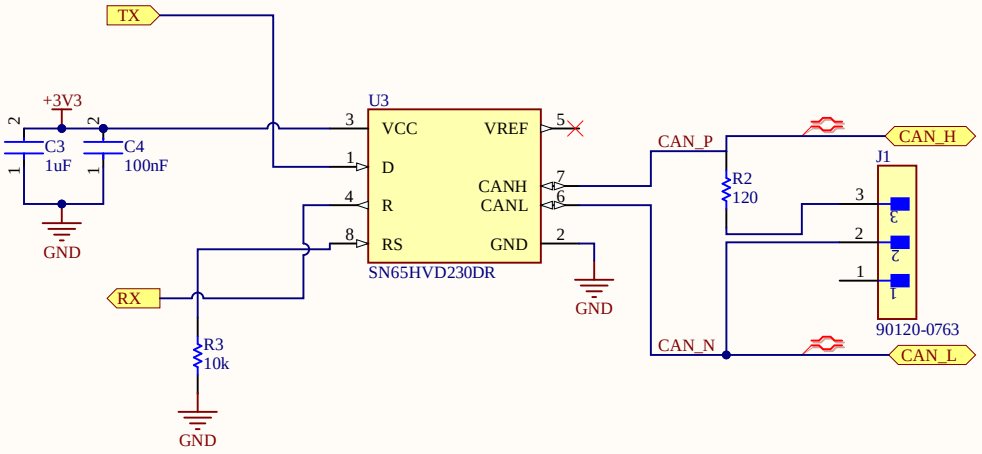

Title	CAN	
Size A4	Number	Revision
Date: 4/23/2026		Sheet of
File: C:\Users\..\CAN.SchDoc		Drawn By:

The pinouts of the teensy 3.5 footprint was modified to match teensy 4.1 to save time. This board uses a Teensy 4.1

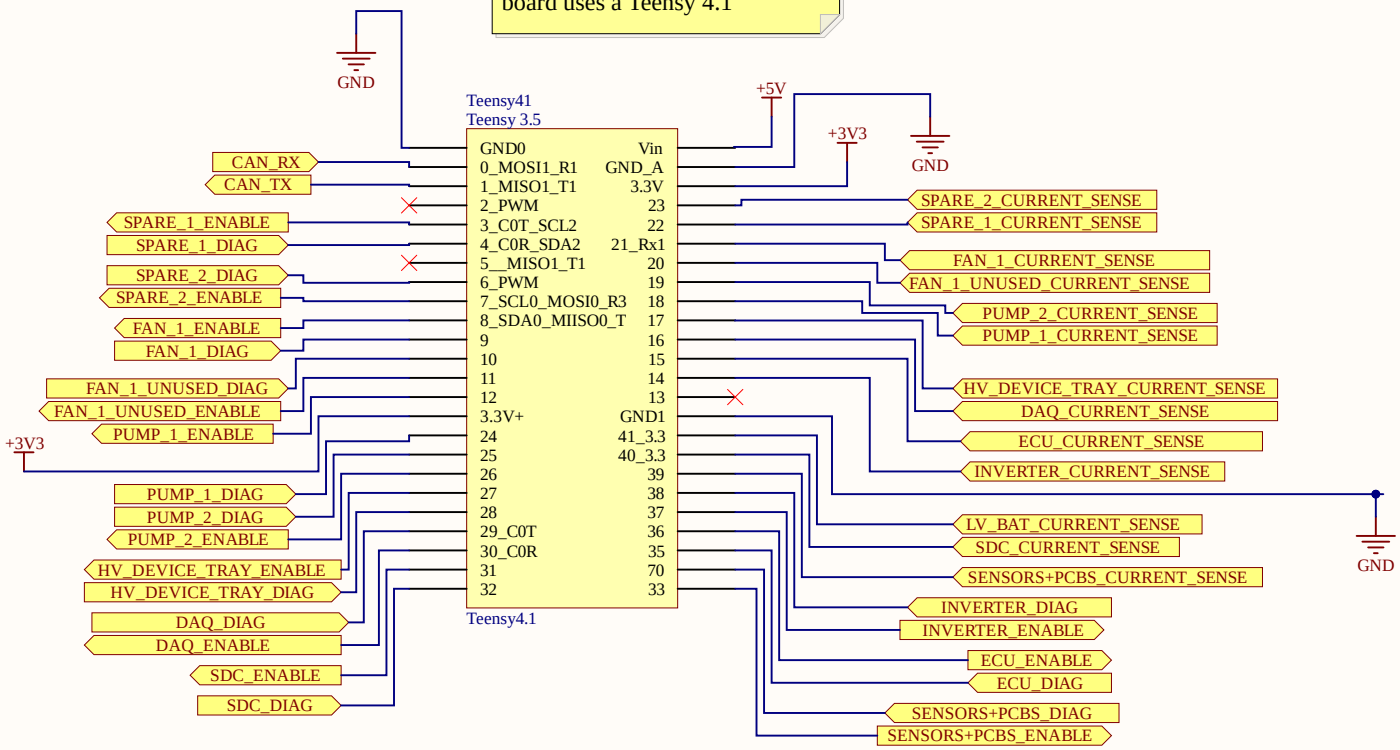

The 3D Teensy model is wrong. The micro-usb port of the teensy should face towards the notch in the footprint.

DO NOT use this teensy footprint for future porjects.

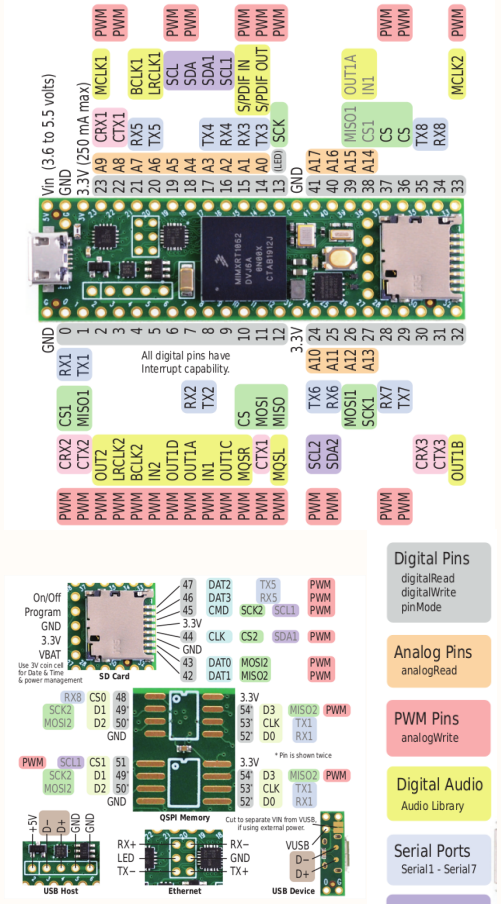

Title	MCU	
Size A4	Number	Revision
Date: 4/23/2026	Sheet of	
File: C:\Users\..\MCU.SchDoc	Drawn By:	

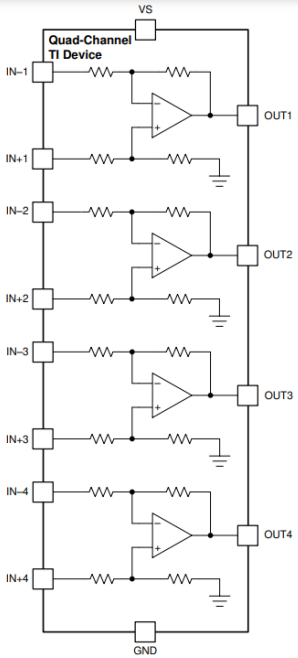

Figure 8-3. INA4180 Functional Block Diagram

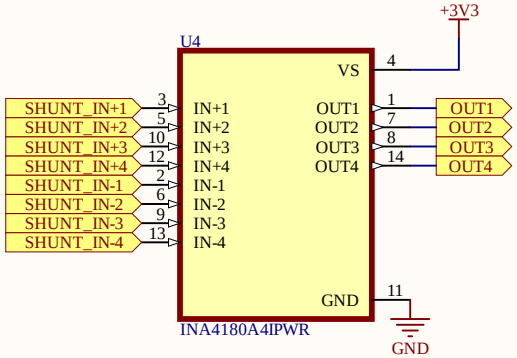

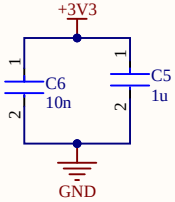

Title	HSS Module Current Sense	
Size A4	Number	Revision
Date: 4/23/2026	Sheet of	
File: C:\Users\..\HSS_Module_Current_Sense.SchDoc	Drawn By:	

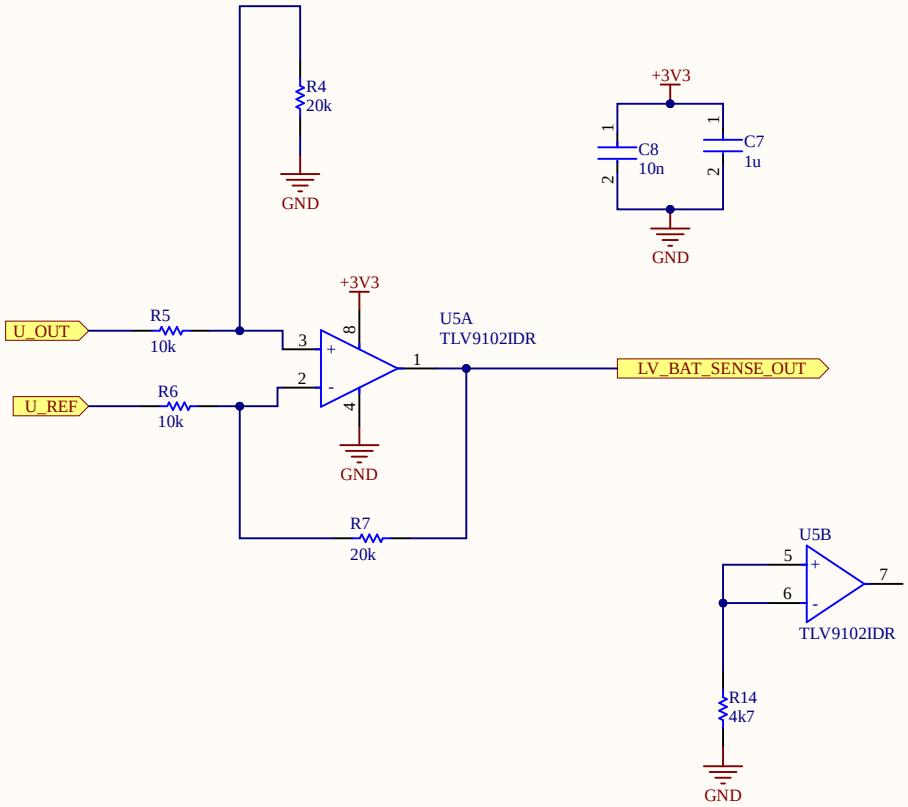

Title	LV Battery Current Sense	
Size A4	Number	Revision
Date: 4/23/2026	Sheet of	
File: C:\Users\..\LV_Bat_Current_Sense.SchDoc	Drawn By:	

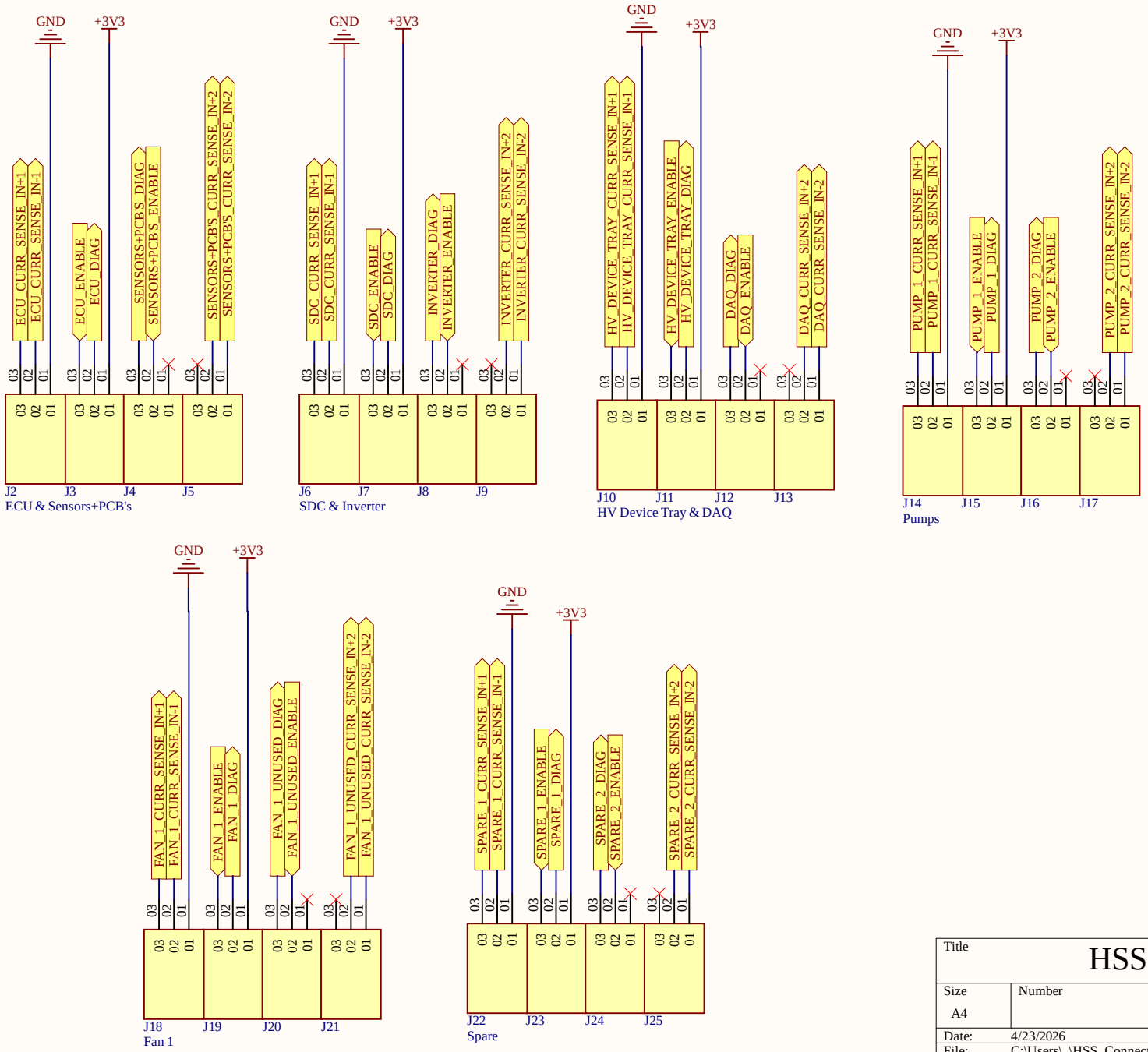

Title	HSS Connector	
Size A4	Number	Revision
Date: 4/23/2026	Sheet of	
File: C:\Users\..\HSS_Connectors.SchDoc	Drawn By:	

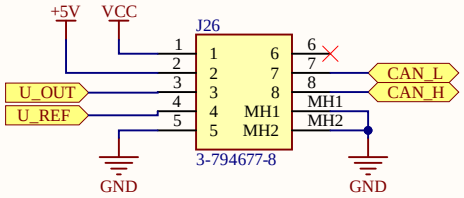

Title	Input Connector	
Size A4	Number	Revision
Date: 4/23/2026		Sheet of
File: C:\Users\..\Input_Connector.SchDoc		Drawn By: