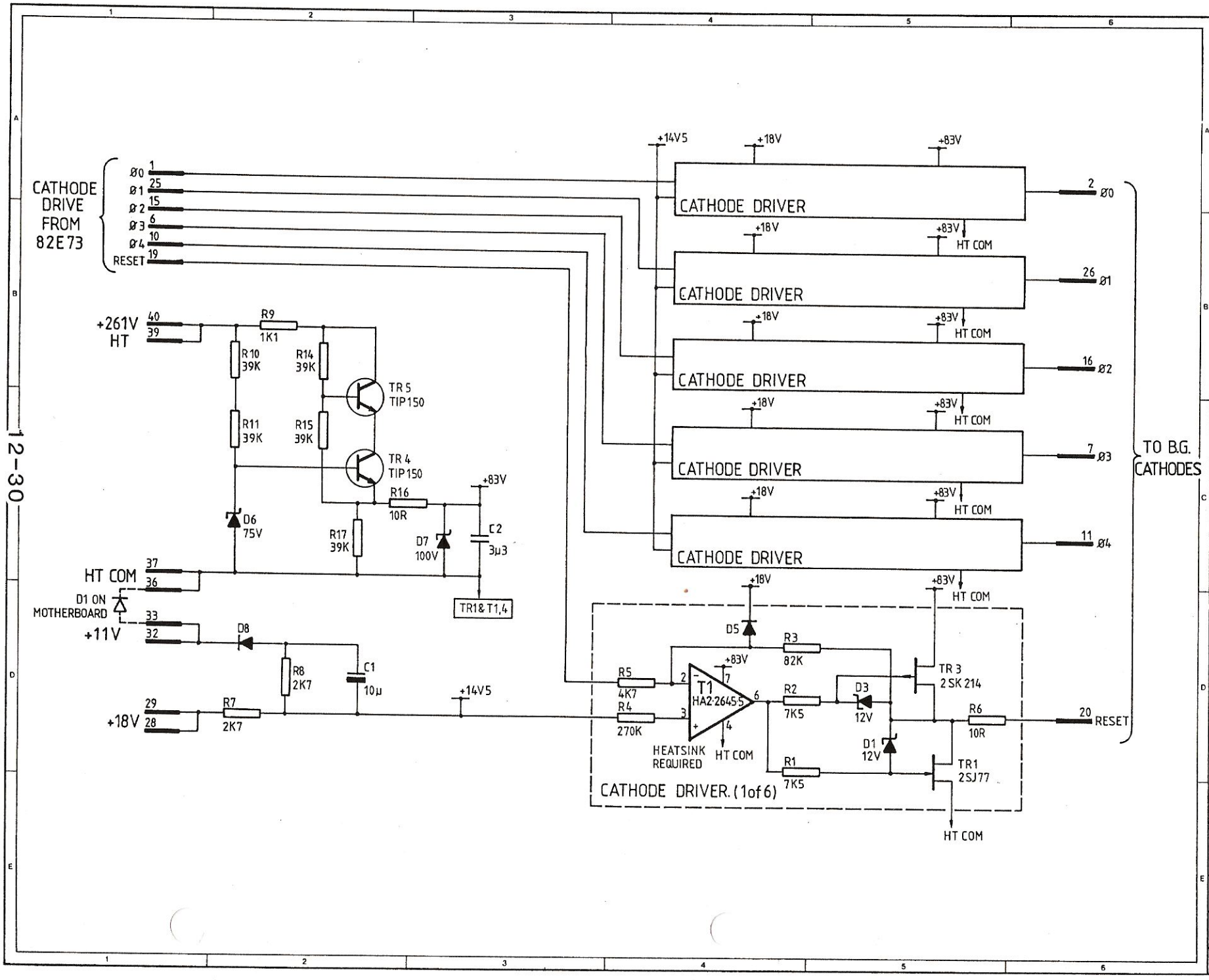

Copyright © SSL All rights reserved. This document may not be reproduced in any form without the written permission of SSL

Rev.	Issue	Ckd	Details
8	a	11·82	D6 CHANGED TO 75V.
9	a	1·83	REGULATOR CHANGED.
9	b	AM Mar86	REDRAWN.

Title
BARGRAPH DRIVER CARD

Drg.No. T82075·71

Solid State Logic
Stonesfield · Oxford · England