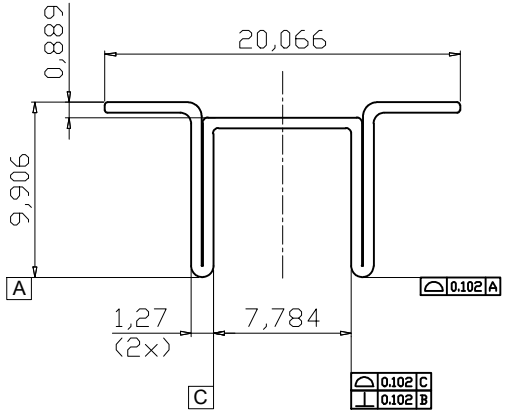

⑥ Recommended PCB solder layout footprint
all dimension in mm

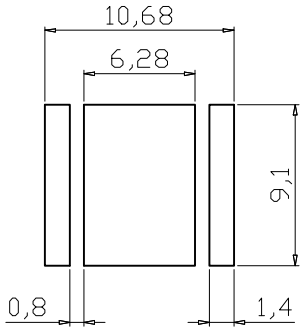

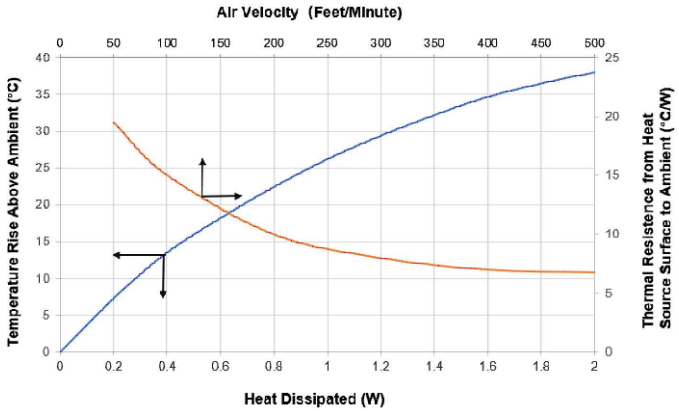

⑨ Thermal Resistance Diagram

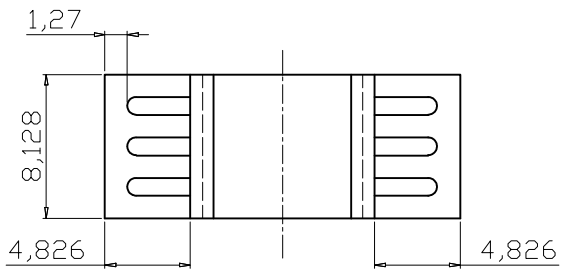

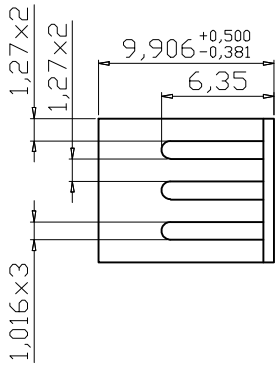

Option	Packaging	Thermal resistance(K/W)
V-1100-SMD/B	⑤ Tape&Reel ③ 400 pcs/reel	25
V-1100-SMD/B-L	Bulk ⑦ 625 pcs/pe bag	25

RoHS compliant

Unit:mm

Material :Copper T=0.6mm;
Finished: Bright Tin Plated;
Unmarked round angle R is 0.75

Scale	Free
TOLERANCE	
UNIT	±0.3
DIM	TOL
UNIT	±0.5°
Angle	TOL

Id.	Modification	Date	Name
⑨	Add the thermal resistance diagram	23.09.2023	Segal
⑧	Add the packing information on page 2	01.07.2020	Segal
⑦	Update packaging qty	19.03.2018	Amy
⑥	Add PCB layout	14.10.2014	Amy
⑤	Change the packing qty	10.01.2014	Amy
④	Change production plant	26.09.2013	Amy

	Date	Name
Drawn	11.08.2009	Dean
Approved	23.09.2023	Segal

ASSMANN WSW components
A company of BCS

Description: Stamping heat sink

ASSMANN WSW-No.
V-1100-SMD/Bx

Drawing-No.
ASS 0855 HS

rev09

Customer-No.

SHEET
1 / 2

V-1100-SMD/B packing way

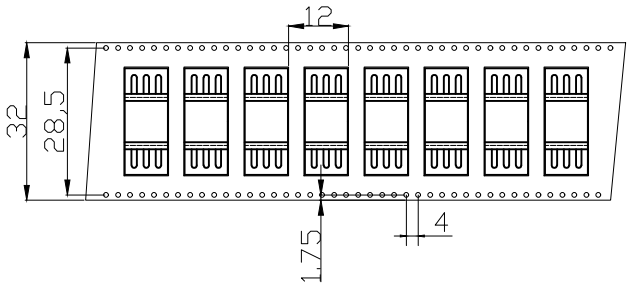

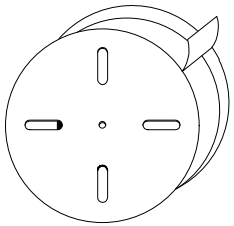

Material: PS

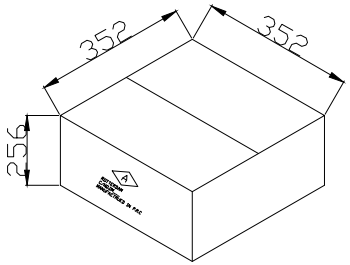

1. Carton size: 352x352x256mm;
2. 400pcs/Reel, 4 Reels/Carton, 1600pcs/Carton;
3. N.G.: 4.8KG, W.G.: 6.0KG.

V-1100-SMD/B-L packing way

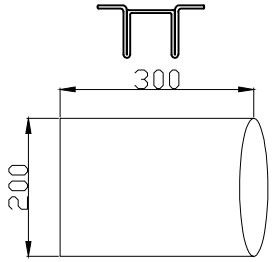

PE bag

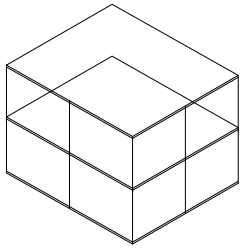

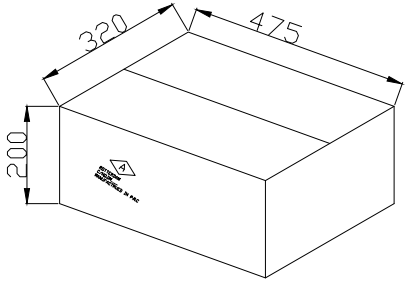

1. Carton size: 475x320x200mm;
2. 625pcs/PE bag, 8 bags/Carton, 5000pcs/Carton;
3. N.G.:10.0kG, W.G.:11.0KG.

RoHS compliant

Unit:mm

Scale	Free
TOLERANCE	
UNIT	±0.3
DIM	TOL
UNIT	±0.5°
Angle	TOL

Id.	Modification	Date	Name
⑨	Add the thermal resistance diagram	23.09.2023	Segal
⑧	Add the packing information on page 2	01.07.2020	Segal
⑦	Update packaging qty	19.03.2018	Amy
⑥	Add PCB layout	14.10.2014	Amy
⑤	Change the packing qty	10.01.2014	Amy
④	Change production plant	26.09.2013	Amy

	Date	Name
Drawn	11.08.2009	Dean
Approved	23.09.2023	Segal

ASSMANN WSW components
A company of BCS

Description: Stamping heat sink

ASSMANN WSW-No.
V-1100-SMD/Bx

Drawing-No.
ASS 0855 HS

rev09

Customer-No.

SHEET
2 / 2