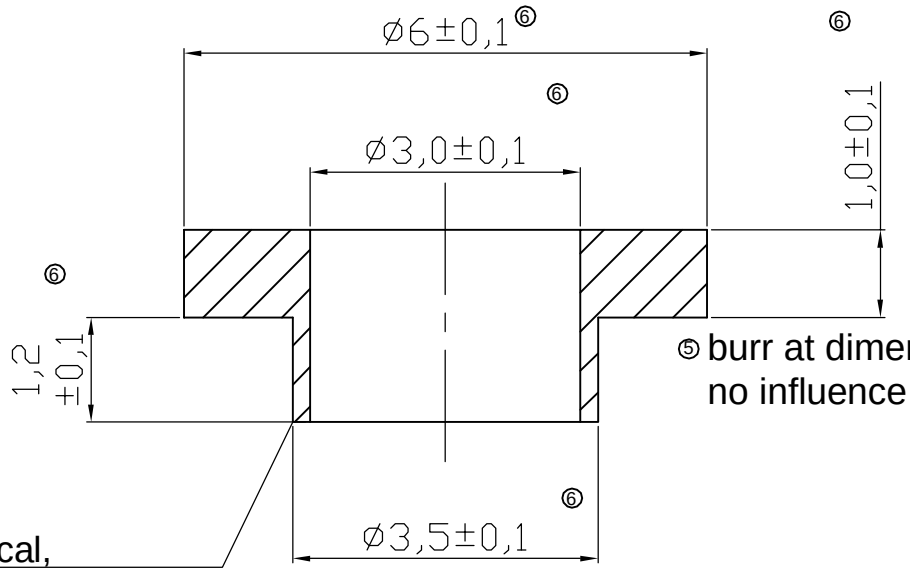

RoHS compliant

unit:mm

Notes
Material:SR25
Dielectric strength: 380kV/cm
Heat resistance:215°C
Tensile strength: 80N/mm

Id.	Modification	Date	Name
⑥	change tolerance	19.07.2018	Hellwig
⑤	Add. comment	13.07.2018	Hellwig
④	Add. tolerance	28.02.2012	N.Schulz
③	Modify drawing layout	10.03.2010	Dean
②	Update	20.08.2009	Dean
①	Drawn	23.06.2005	Storb

	Date	Name
Drawn	23.06.2005	Storb
Approved	28.02.2012	Andy

ASSMANN WSW components

Customer-No.

ASSMANN WSW-No. V5359

Drawing-No. ASS 0416 HS

rev07
~~rev06~~

Replace

Sheet