VDT Research Roadmap

From Same-Stack Attribution to a Paper-Ready Depth-Routing Story

Repository-grounded roadmap for the current `vdt_dev/` research stack

March 23, 2026

1 Project Status and Real Code Boundaries

The repository currently supports two distinct roles.

- The root baseline remains the preserved original VDT reference line. The baseline training and evaluation logic still live in `main.py`, `decision_transformer.py`, `trajectory_gpt2.py`, `src/iql.py`, `src/util.py`, and `src/value_functions.py`. This path should continue to serve reproduction, not rapid research iteration.
- The research line now lives inside `vdt_dev/` and is already a real experiment platform rather than a loose prototype.

The `vdt_dev/` stack has progressed through four concrete stages:

1. **Step 1: VDT-BAR.** The actor backbone adds static-query Block Attention Residual routing over transformer depth. The change is intentionally narrow: actor residual aggregation changes, but the Q/V objectives, actor loss, and original value-guided sampling semantics do not.
2. **Step 2: VDT-VCDR.** The BAR path now supports four query modes: `static`, `state`, `state_rtg`, and `state_rtg_value`. Query fusion is additive, $q = w + \Delta q$, and the value-conditioned mode only uses detached scalar $V(s_t)$. The repository still does *not* implement advantage-, uncertainty-, or Q-conditioned routing.
3. **Step 3: experiment and analysis infrastructure.** `vdt_dev/runner.py` now supports manifests, structured logs, best/latest checkpoints, resume behavior, RTG-grid reevaluation, aggregation, plotting, table export, and routing-debug collection. The experiment registry and preset layer already cover query-mode sweeps, depth sweeps, seed sweeps, Gym environment sweeps, and RTG-grid analysis.
4. **Step 4: attribution, rigor, and stronger setting.** The repo now includes a same-stack `vanilla_dev` baseline, compute-reporting plus approximate matched-budget depth presets, and a dev-stack offline-to-online tuning path for Hopper. This gives the project a much stronger paper framing than a pure architecture tweak inside offline Gym-only experiments.

2 Standard Residual Connection (Baseline)

The standard residual update:

$$h_l = h_{l-1} + f_{l-1}(h_{l-1}) \tag{1}$$

Unrolling the recurrence:

$$h_l = h_1 + \sum_{i=1}^{l-1} f_i(h_i) \tag{2}$$

Every layer receives the same uniformly-weighted sum of all prior layer outputs — this is what our depth routing aims to improve.

3 Full Attention Residuals

Replace fixed accumulation with learned softmax attention over depth:

$$h_l = \sum_{i=0}^{l-1} \alpha_{i\to l} \cdot v_i \tag{3}$$

The attention weights are computed via softmax:

$$\alpha_{i\to l} = \frac{\phi(q_l,\, k_i)}{\sum_{j=0}^{l-1} \phi(q_l,\, k_j)} \tag{4}$$

with the kernel function:

$$\phi(q,\, k) = \exp\Big(q^\top \operatorname{RMSNorm}(k)\Big) \tag{5}$$

Queries and keys are defined as:

$$q_l = w_l, \qquad k_i = v_i = \begin{cases} h_1 & i = 0 \\ f_i(h_i) & 1 \le i \le l-1 \end{cases} \tag{6}$$

where $w_l \in \mathbb{R}^d$ is a layer-specific learnable pseudo-query vector.

4 Block Attention Residuals (VDT-BAR)

Partition L layers into N blocks of $S = L/N$ layers each.

Intra-block accumulation. Within each block n, layer outputs are summed:

$$b_n = \sum_{j \in \mathcal{B}_n} f_j(h_j) \tag{7}$$

Let b_n^i denote the partial sum over the first i layers in $\mathcal{B}_n$, so that $b_n = b_n^S$.

Inter-block attention. For the i-th layer in block n, the value matrix is:

$$V = \begin{cases} [b_0,\, b_1,\, \ldots,\, b_{n-1}]^\top & \text{if } i = 1 \text{ (first layer of block } n) \\ [b_0,\, b_1,\, \ldots,\, b_{n-1},\, b_n^{i-1}]^\top & \text{if } i \ge 2 \text{ (subsequent layers)} \end{cases} \tag{8}$$

where $b_0 = h_1$ (token embedding). Keys and attention weights follow Eq. (4) and Eq. (6).

Efficiency. Memory reduces from $O(Ld)$ to $O(Nd)$, and computation from $O(L^2)$ to $O(N^2)$. Empirically, $N \approx 8$ recovers most of the benefit.

5 Value-Conditioned Depth Routing (VDT-VCDR)

In VDT-VCDR, the static pseudo-query w_l is augmented with a *dynamic* residual that depends on the decision context:

$$q_l = w_l + \Delta q_l \tag{9}$$

The project supports four query modes:

- `static`: $\Delta q_l = 0$ (reduces to BAR)
- `state`: $\Delta q_l = g_\theta(s_t)$
- `state_rtg`: $\Delta q_l = g_\theta(s_t,\, \hat{r}_t)$
- `state_rtg_value`: $\Delta q_l = g_\theta\big(s_t,\, \hat{r}_t,\, \mathrm{sg}[V_\psi(s_t)]\big)$

where sg[·] denotes stop-gradient (detached value), ensuring the value function does not receive gradients through the routing path. The fusion is additive, preserving the static query as the base routing signal.

6 VDT Actor Loss (Kept Fixed)

The advantage-weighted actor loss with value regularization (unchanged from the original VDT):

$$\mathcal{L} = \mathbb{E}_{\substack{\tau_t \sim D \\ (s_t, a_t) \sim \tau_t}} \Big[\exp\big(\eta \cdot A_t\big) \, \|\pi_{\mathrm{DT}}(\tau_t) - a_t\|^2 \; - \; \lambda \cdot \min_{i=1,2} Q_{\hat{\theta}_i}\big(s_t,\, \pi_{\mathrm{DT}}(\tau_t)\big) \Big] \tag{10}$$

where the advantage is:

$$A_t = \min_{i=1,2} Q_{\hat{\theta}_i}(s_t,\, a_t) - V_\psi(s_t) \tag{11}$$

η is an inverse temperature and λ balances the two loss terms.

7 Value Function Training (Kept Fixed)

State-value function. Trained via expectile regression:

$$\mathcal{L}_V(\psi) = \mathbb{E}_{(s_t, a_t) \sim D} \Big[L_2^\epsilon \Big(Q_{\hat{\theta}}(s_t, a_t) - V_\psi(s_t) \Big) \Big] \tag{12}$$

where $L_2^\epsilon(u) = |\epsilon - \mathbf{1}(u < 0)| \, u^2$ and $\epsilon > 0.5$.

Q-function. Updated via the n-step Bellman target:

$$\mathcal{L}_Q(\theta_i) = \mathbb{E}_{(s_t, a_t, r_t, \ldots, s_{t+n}) \sim D} \left[\left(\sum_{k=0}^{n-1} \gamma^k r_{t+k} + \gamma^n V_\psi(s_{t+n}) - Q_{\theta_i}(s_t, a_t) \right)^2 \right] \tag{13}$$

8 Depth Mixing Matrix (Analysis Framework)

All residual variants can be unified as:

$$h_l = \sum_{i=0}^{l-1} M_{i\to l}\, v_i \tag{14}$$

- **Standard residual:** $M_{i\to l} = 1$ for all $i < l$ (all-ones lower-triangular).
- **Full AttnRes:** $M_{i\to l} = \alpha_{i\to l}$ (dense, rank-L, input-dependent).
- **Block AttnRes:** $M_{i\to l} = \alpha_{n\to l}$ for all $i \in \mathcal{B}_n$ (effective rank between N and $N + S$).

This provides a clean lens for comparing vanilla_dev (standard) vs. BAR (block) vs. VCDR (block + dynamic query).

9 VDT Sampling Process with Q-Evaluation

At timestep t, the optimal action is selected across m candidate RTGs using:

$$Q_t^k = \sum_{i=0}^{E} \gamma^i \cdot Q\big(s_{t+i}^k,\, a_{t+i}^k\big) \tag{15}$$

$$a_t = \arg\max_{a_t^k}\; Q_t^k \tag{16}$$

where E is the evaluation horizon and trajectories are predicted autoregressively under each RTG $\hat{r}_0^k$.

Important real boundaries remain:

- `runner.get_env_metadata()` currently supports the Gym medium trio: Hopper, Walker2d, and HalfCheetah.
- Maze2D and AntMaze exist only as preset/config templates, not as runnable mainline experiments in the current runtime path.
- The matched-budget infrastructure is parameter-matched and compute-aware, but not exact FLOP-matched.
- The online path is real and integrated, but the explicit configs and launchers are currently Hopper-first rather than broad-environment online sweeps.

The dev test suite is also nontrivial. The current repository contains tests for BAR/VCDR forward and backward behavior, query-conditioning modes, same-stack `vanilla_dev` support, compute reporting, preset expansion, schema stability, plot smoke tests, and online rollout shape handling. That is important for paper execution because it means the stack is stable enough to support systematic experimentation.

10 Main Conference Narrative

10.1 One-sentence thesis

Value guidance in VDT should not stop at objectives and target returns; it should also determine which *depth-level representations* the decision model relies on when choosing actions.

10.2 Three-sentence abstract-level story

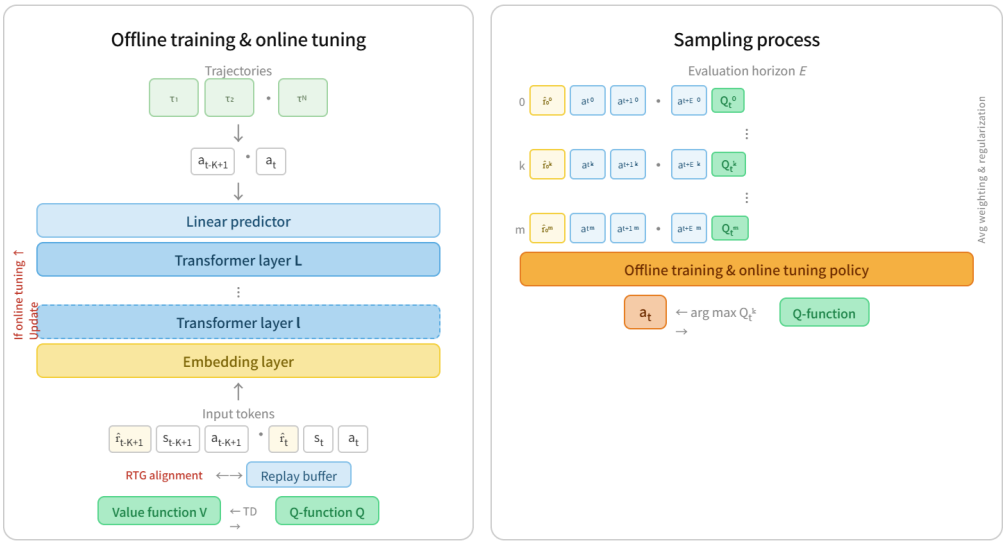

Figure 1: vdt.png

The original VDT already uses value information in the critic/value objectives and in target-return-guided decision making, but it still aggregates transformer depth in a standard residual manner. This project asks whether the actor should also perform *depth-wise residual routing*, first with static routing over grouped residual sites (VDT-BAR) and then with state/RTG/value-conditioned routing (VDT-VCDR), while keeping the original Q/V objectives and sampling semantics fixed. The resulting same-stack comparison—`vanilla_dev` vs. BAR vs. VCDR—is the cleanest path to attributing gains to depth routing itself rather than to unrelated training changes.

10.3 Three-sentence abstract-level story

10.4 Why this story is plausible

The current repository already supports the exact ingredients needed for this thesis:

- a preserved original baseline for historical reference,
- a same-stack `vanilla_dev` baseline for clean attribution,
- BAR and VCDR variants that differ only in actor-side depth routing,
- compute-aware depth infrastructure,
- offline-to-online tuning support aligned with the original VDT narrative,
- RTG-grid reevaluation and routing-debug hooks for mechanism and alignment analysis.

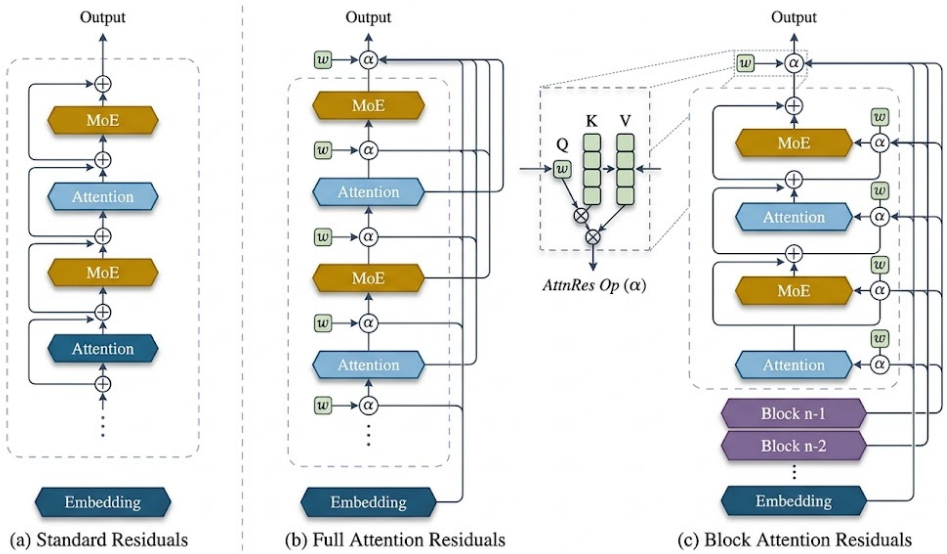

Figure 2: Overview of Attention Residuals

10.5 Why the story is not complete yet

The story is promising but not yet paper-complete because the repository state alone is not the evidence. The paper still needs:

- a convincing same-stack attribution result showing `BAR` beats `vanilla_dev` often enough to justify the architecture change,
- a convincing incremental result showing `state_rtg_value` improves on static BAR often enough to justify value-conditioned routing,
- a compute-aware depth story showing whether routing matters more when depth increases,
- and at least one stronger setting result, preferably online tuning, so the paper is not reduced to "offline Gym architecture cosmetics".

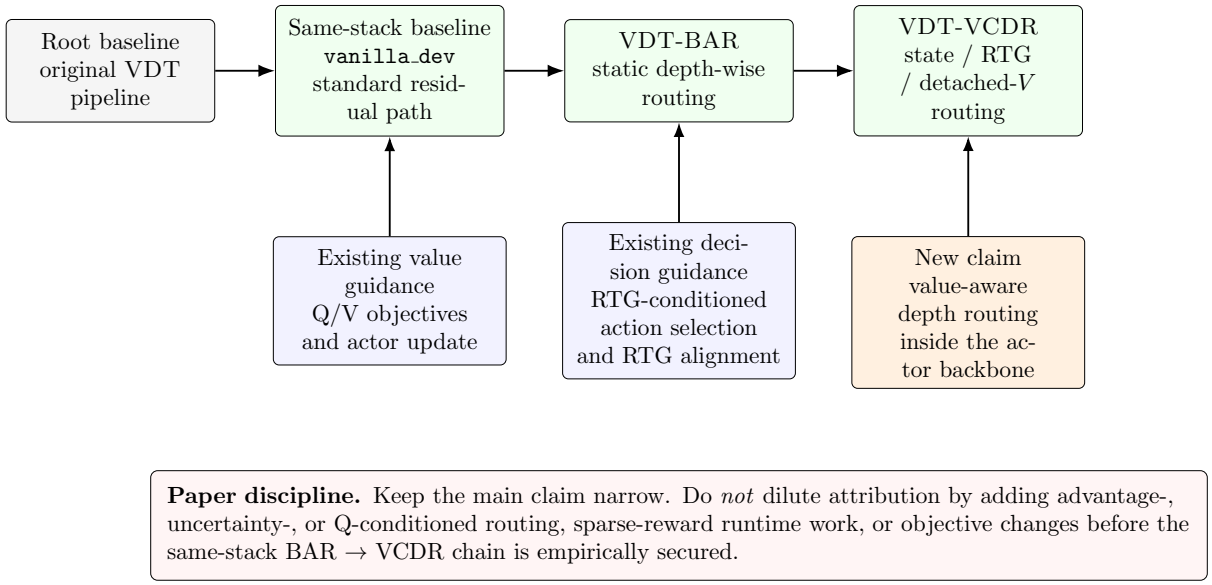

Paper discipline. Keep the main claim narrow. Do *not* dilute attribution by adding advantage-, uncertainty-, or Q-conditioned routing, sparse-reward runtime work, or objective changes before the same-stack BAR → VCDR chain is empirically secured.

Figure 3: Repository-grounded paper framing. The proposal adds a third locus of value guidance—depth-wise routing—while preserving the original VDT Q/V objectives and target-return semantics.

11 What the Repository Already Secures for Publication

Status	Assessment
Strongest contribution	Same-stack actor-side attribution: the repo now supports `vanilla_dev`, BAR, and VCDR under the same runner, checkpointing, manifest schema, aggregation, plotting, RTG-grid reevaluation, and online entrypoints. This is the clearest publishable asset because it isolates depth routing from unrelated engineering changes.
Supporting contribution	The project has become an experiment platform rather than a one-off model fork. Presets, manifests, compute reports, online/offline-aware aggregation, and routing-debug summaries make the work more reproducible and more reviewable.
Still-weak contribution	The structural depth claim is not yet strong until the matched-budget sweep is actually run and the compute overhead is reported next to returns. The infrastructure exists, but the paper value only materializes once the evidence is produced.
Risky contribution	Broad generality claims beyond Hopper medium are still weak. Sparse-reward claims are especially risky because Maze2D/AntMaze are only templates in the current runtime. Any main-text claim in that direction would currently overstate the repository.

12 Reviewer-Style Direction Check

12.1 What the project is doing right

- The scope is disciplined: routing changes are isolated to the actor backbone.
- The same-stack baseline closes a major attribution gap that many architecture papers leave open.
- The online path makes the work more faithful to the original VDT narrative than a pure offline-Gym-only paper.
- The analysis layer already supports RTG alignment, routing entropy, source usage, source distance, hidden norms, and query norms, which is unusually strong for mechanism follow-up.

12.2 What could weaken the paper if not controlled

- If the paper tries to claim too many things at once—architecture, representation learning, sparse-reward stitching, online RL, and calibration—the core message will blur.
- If matched-budget evidence is missing, any strong "deeper models benefit more" claim will sound confounded by width and compute.
- If online results are weak, the paper should not force online as a headline contribution; it should become a supporting result or appendix line.
- If only Hopper is strong, the project must avoid pretending that the method is already a broad offline RL generalization story.

12.3 What should *not* expand right now

- Do not add advantage-conditioned routing yet.
- Do not add uncertainty-conditioned routing yet.
- Do not add Q-conditioned routing yet.
- Do not pivot the current paper around Maze2D or AntMaze until the runtime truly supports them.
- Do not let the paper become mostly about infrastructure; the infrastructure is a means to clean evidence, not the thesis.

13 Critical Research Questions and Their Priority

1. **Same-stack attribution:** Does BAR beat `vanilla_dev` under the exact same dev stack? If not, the paper loses its first causal link.
2. **Incremental routing value:** Does `state_rtg_value` beat static BAR reliably enough to justify conditioning routing on decision and value context?
3. **Minimal useful dynamic context:** Is `state_rtg_value` actually better than `state` and `state_rtg`, or is the detached value input unnecessary?

4. **Depth story:** Does routing matter more as the actor gets deeper, especially when depth comparisons are compute-aware?
5. **Online relevance:** Do BAR or VCDR improve offline-to-online tuning over the same-stack baseline, or are their gains confined to offline evaluation?
6. **Alignment and mechanism:** Do RTG alignment curves and routing-mechanism summaries support the intended interpretation, rather than merely reporting return deltas?

For the current repository, Questions 1 and 2 are *mandatory*. Questions 3–5 are the main strengthening axes. Question 6 is critical for interpretation but should follow once the core behavioral signal exists.

14 Staged Research Roadmap

Stage A: Immediate (next 1–2 weeks)

Goal. Establish whether the paper has a viable same-stack causal chain: `vanilla_dev` → BAR → VCDR.

Must-run experiments.

- Hopper same-stack attribution: `vanilla_dev` vs. BAR static vs. VCDR `state_rtg_value`.
- Hopper query-mode sweep: `static`, `state`, `state_rtg`, `state_rtg_value`.
- Hopper same-stack online compare: `vanilla_dev` vs. BAR vs. VCDR.
- One seed extension on the most promising same-stack and query-mode settings.

Mechanism analysis.

- Routing entropy and source-distance summaries for BAR vs. VCDR.
- Query norm decomposition: static, delta, fused.
- RTG-grid reevaluation for at least BAR static vs. VCDR `state_rtg_value`.

Deliverables.

- A first main-result table candidate for Hopper.
- A query-mode ablation figure.
- An initial online before/after bar figure.
- One alignment curve and one mechanism figure draft.

Failure signals.

- BAR does not outperform `vanilla_dev` at all.
- VCDR fails to improve over BAR or only wins in noisy one-off seeds.
- Online results are flat or negative across all three variants.

Go / no-go gate.

- **Go:** BAR > `vanilla_dev` on Hopper and VCDR > BAR on at least one meaningful axis (offline, online, or alignment).
- **No-go:** Neither causal step is supported. If that happens, narrow the paper immediately instead of expanding experiments.

Stage B: Decision and Expansion (2–6 weeks)

Goal. Decide whether the paper can support a depth-routing story beyond a single-environment anecdote.

Must-run experiments.

- Same-stack equal-width depth sweep: `vanilla_dev`, BAR, VCDR at 6/12/18 layers.
- Matched-budget depth sweep using the current preset generator.
- Gym same-stack environment sweep across Hopper, Walker2d, and HalfCheetah at 6 layers.
- Seed sweeps on the best one or two model families only.

Mechanism analysis.

- Compare whether depth increases amplify routing selectivity or source-distance changes.
- Check whether VCDR's benefit tracks RTG alignment improvements.
- Build compute tables alongside return tables; never present deeper-is-better without compute context.

Deliverables.

- A main-text table candidate across environments or across model families, depending on where the signal is strongest.
- A compute-aware depth figure and table.
- A refined mechanism panel for routing entropy, source usage, and query norms.

Failure signals.

- Gains disappear outside Hopper.
- Depth claims vanish once budget matching is considered.
- The compute overhead is large enough that the return gains are not persuasive.

Go / no-go gate.

- **Go:** at least one of the following becomes robust: cross-environment gains, compute-aware depth gains, or online gains.
- **No-go:** if the signal remains Hopper-only and shallow, reshape the paper around a narrower but cleaner claim.

Stage C: Manuscript Strengthening (paper convergence)

Goal. Convert positive evidence into a compact, defensible conference paper.

Main-text emphasis.

- Same-stack attribution must become the center of the narrative.
- One strengthening axis should accompany it in the main text: either online tuning, compute-aware depth, or RTG alignment/mechanism, depending on the strongest evidence.

Appendix emphasis.

- Additional query-mode details.
- Full compute tables.
- Extra debug figures and per-layer visualizations.
- Extra seeds and supplementary environment breakdowns.

Paper-writing gate.

- Lock the main table only after the same-stack and query-mode evidence are stable.
- Lock the main figure only after deciding which strengthening axis is strongest.
- Freeze algorithmic scope before drafting related work and final method sections.

Stage D: If the main conclusion is weak

Goal. Preserve publishable value by narrowing the claim rather than over-claiming.

Fallback pathways.

- If BAR beats `vanilla_dev` but VCDR is weak, write the paper as a depth-wise residual routing study with dynamic routing as an exploratory appendix result.
- If VCDR helps only online, position value-conditioned routing as a setting-sensitive extension rather than a universally better backbone.
- If the signal is narrow but interpretable, convert the paper into a mechanistic study of representation routing in value-guided decision models rather than a broad benchmark paper.

15 Paper-Level Experiment Map

Experiment family	Repository support	Paper role	Priority	Placement
Same-stack attribution	Dedicated launcher, manifests, checkpoints, aggregation	Establish BAR and VCDR as real improvements over the same-stack baseline	Mandatory now	Main text
Query-mode sweep	Dedicated 4-GPU launcher	Show whether detached value context matters beyond state and RTG	Mandatory now	Main text or main ablation
Online compare	Dedicated Hopper launcher plus online-aware aggregation/plotting	Show relevance to the original VDT offline-to-online narrative	High priority	Main text if strong, appendix otherwise
Equal-width depth sweep	Existing preset/launcher support	Trend diagnostic for depth sensitivity	Important	Likely main text support or appendix, depending on signal
Matched-budget depth sweep	Preset generation plus compute tables	Structural rigor for the depth claim	High priority after Stage A	Main text if clean, appendix if mixed
RTG-grid reevaluation	Existing runner/eval path and plotting	Alignment/calibration evidence	Important but secondary	Main text support figure or appendix
Mechanism analysis	Debug hooks plus plotting scripts	Explain *how* routing differs, not only *whether* returns change	Important once returns move	Usually one main figure plus appendix extras
Sparse reward / trajectory stitching	Template only	Future extension or follow-up paper	Not current mainline	Not for current main text

16 Route from Now to Submission

1. **Run and aggregate the same-stack attribution line first.** This decides whether the paper can cleanly claim that actor-side depth routing helps at all.

2. **Run query-mode sweep immediately after.** This decides whether the value-conditioned story is worth centering, or whether BAR alone is the real paper.

3. **Inspect the first four artifacts before broad expansion:** the Hopper same-stack bar

chart, the query-mode bar chart, the online before/after bar chart, and one RTG alignment curve.

4. **Only then commit to the main strengthening axis.** If online looks strong, make online the paper's second pillar; if compute-aware depth looks stronger, make depth the second pillar instead.

5. **Lock the main table once the same-stack and query-mode results are stable across seeds.**

6. **Add mechanism figures only after the behavioral result is fixed.** Mechanism plots are supporting evidence; they should not be used to rescue a weak main result.

7. **Decide by manuscript time whether harder extensions are worth it.** Sparse reward, extra routing channels, or broader online work should only continue if the core paper is already secure.

17 Risks and Backup Plans

Risk	Response
BAR does not beat `vanilla_dev`	Do not keep a broad routing paper. Either narrow to an exploratory negative result plus mechanism observations, or terminate the BAR/VCDR mainline and avoid building on a broken first link.
VCDR does not beat BAR	Reframe VCDR as an exploratory extension. The current paper can still be a clean BAR paper if same-stack BAR is robust.
Online tuning shows no gain	Keep online as a secondary evaluation line rather than a central claim. Use it to show compatibility, not superiority.
Only some environments improve	State the scope honestly. A strong Hopper story with clear attribution can still be publishable if the mechanism is convincing and the claims are appropriately narrow.
Compute overhead is too high	Pair every depth claim with compute tables. If compute-normalized value is weak, downgrade the depth claim and foreground same-stack attribution instead.
Mechanism plots are noisy or non-diagnostic	Keep only one or two clean mechanism figures in the paper; move the rest to appendix rather than overfitting interpretation.

18 Most Recommended Next Actions

1. **Complete Hopper same-stack attribution.** Purpose: verify the first causal link. Success criterion: BAR meaningfully exceeds `vanilla_dev` and VCDR is at least competitive with or better than BAR.

2. **Complete Hopper query-mode sweep and one seed extension.** Purpose: verify whether the detached value channel is a real contributor. Success criterion: `state_rtg_value` is best or tied-best with cleaner RTG/mechanism behavior than simpler modes.

3. **Complete Hopper online compare and at least one RTG-grid alignment pass.** Purpose: determine whether the paper's second pillar should be online relevance or something else. Success criterion: one of online gains, alignment gains, or compute-aware depth gains becomes clearly worth main-text emphasis.

Bottom line. This repository is already beyond the stage of asking "what could we try?" The right question now is "what is the narrowest, strongest conference paper that the current stack can support?" The answer is not a sprawling new-method paper. It is a disciplined same-stack depth-routing paper in which BAR establishes the architectural effect, VCDR tests whether decision/value context improves routing further, and one carefully chosen strengthening axis—online tuning, compute-aware depth, or alignment/mechanism—turns a neat idea into a credible submission.