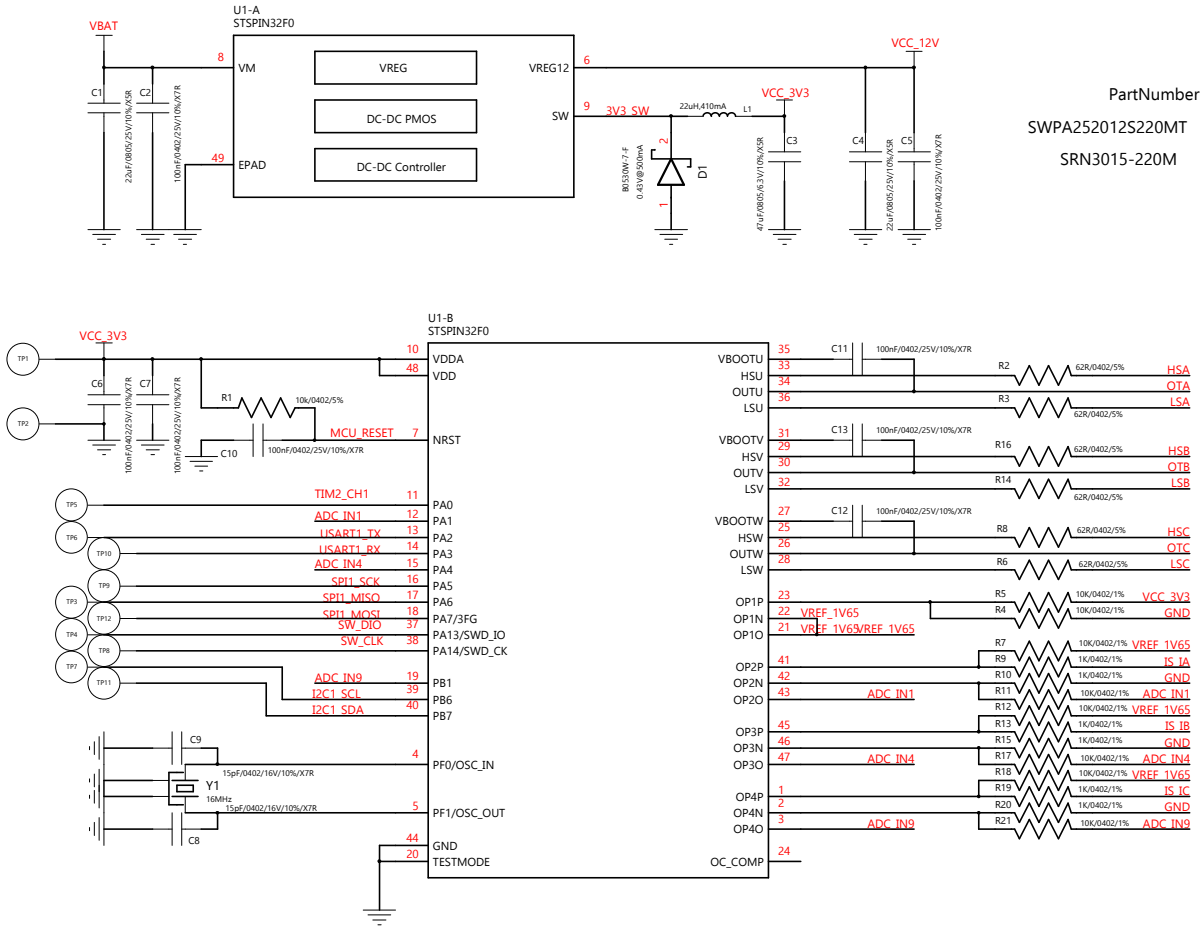

PartNumber	Inductance	DC Resistance	Self-resonant Frequency	Saturation Current	Heat Rating Current	demision
SWPA252012S220MT	22±20%uH	1.52Ω	20MHz	0.53A	0.38A	2.5x2.0x1.0mm
SRN3015-220M	22±20%	0.622	16MHz	0.58	0.6	3.0x3.0x1.5mm

04_STSPIN32F0

Title

D1 Motor Driver_EA_5x6.sch

Size	Document Number	Rev
B		v1.0.0

Date: Wednesday, September 07, 2016 Sheet 4 of 5

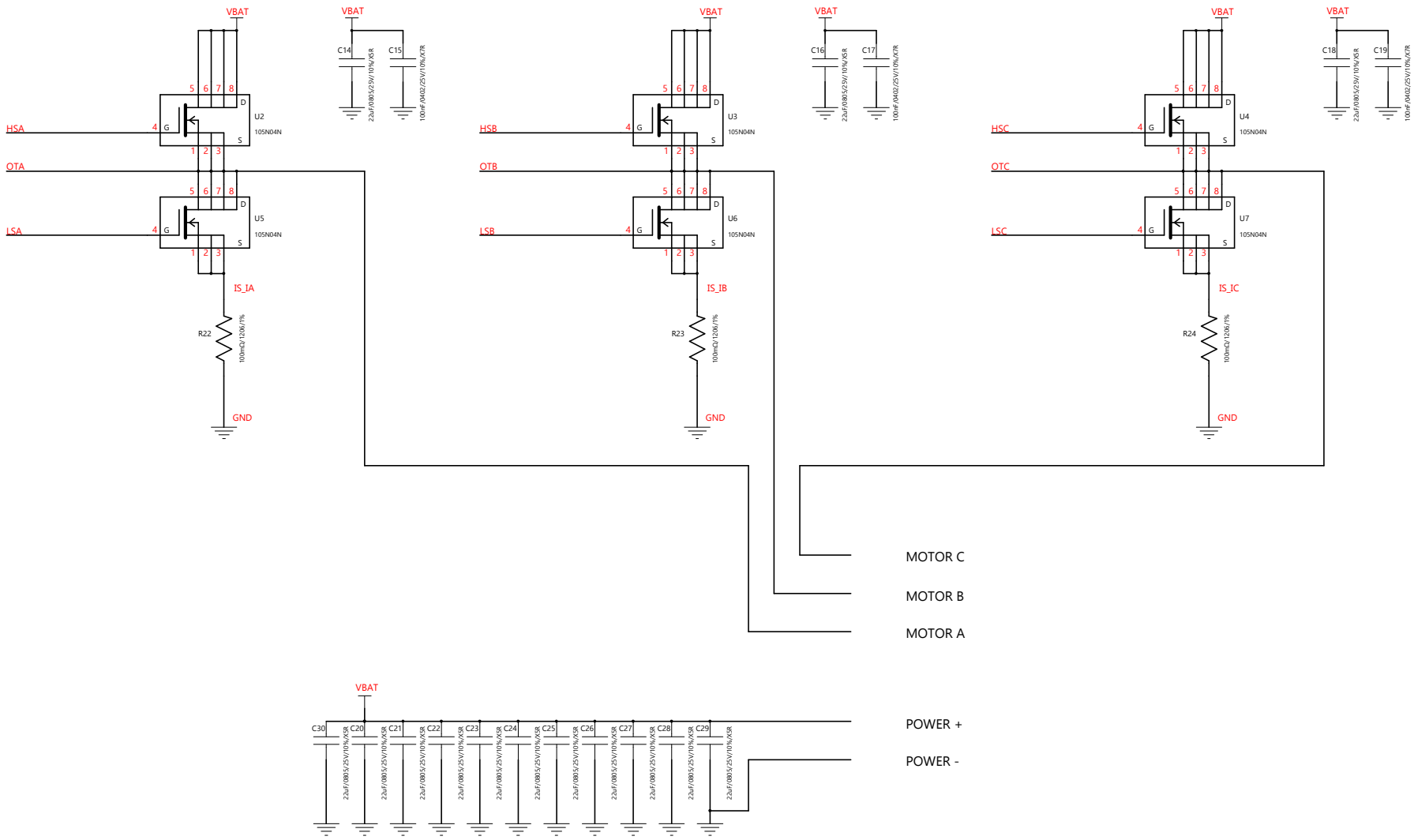

05_MOS_FET

Title

D1 Motor Driver_EA_5x6.sch

Size	Document Number	Rev
B		v1.0.0

Date: Wednesday, September 07, 2016 Sheet 5 of 5