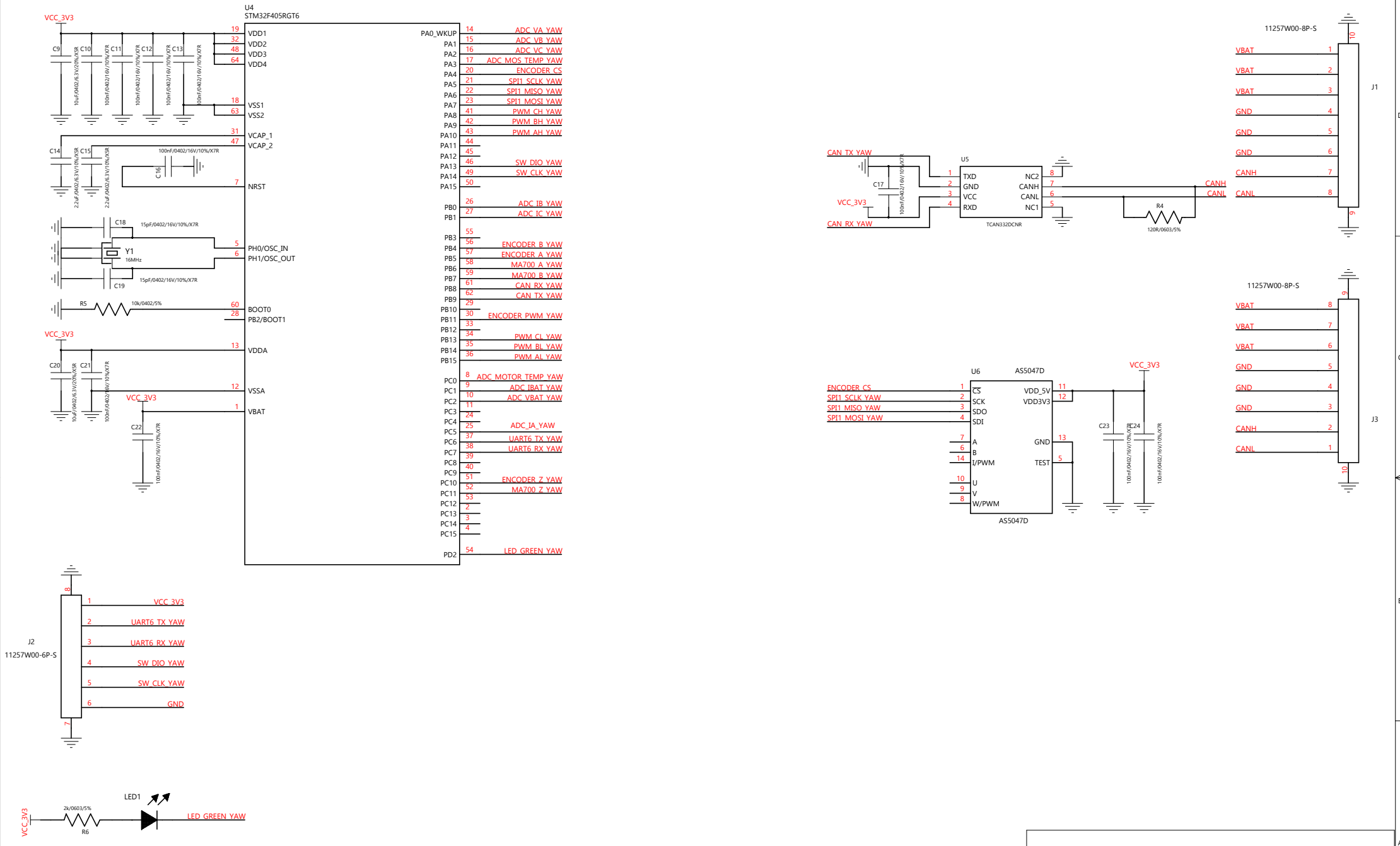


| | |
|---|---|
| | 08_YAW_FOC_STM32 |
| Title | D1 Motor Driver_AC.sch |
| Size B | Document Number |
| Rev v1.0.0 | |
| Date: Wednesday, September 07, 2016 | Sheet 5 of 6 |

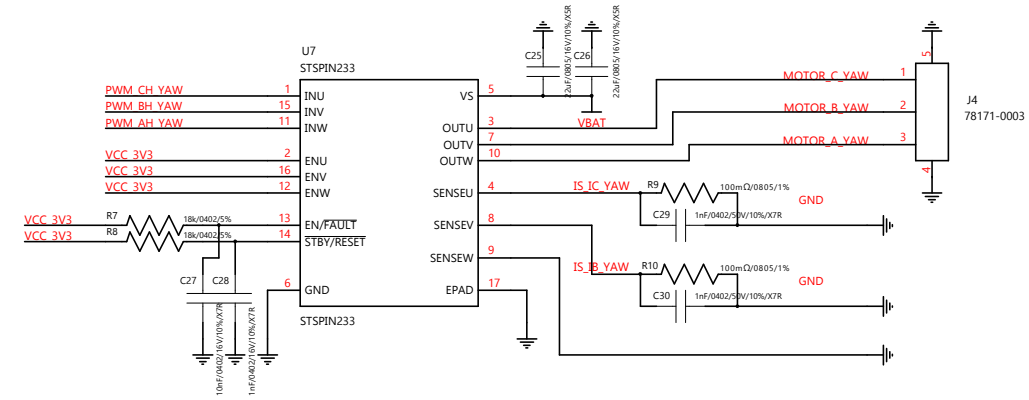


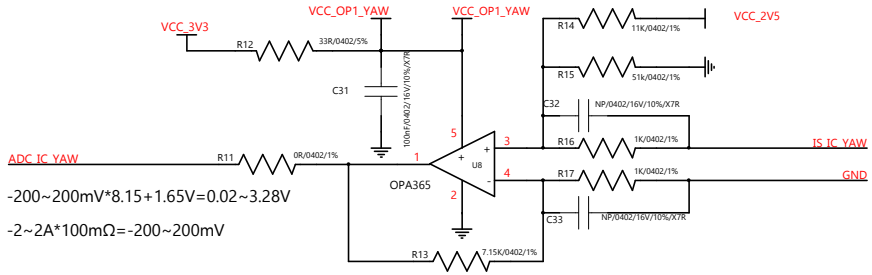


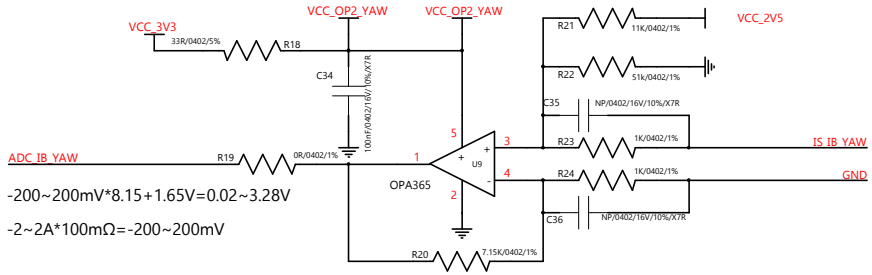


| | | |
|---|---|---|
| 09_YAW_FOC_MOS | | |
| Title: D1 Motor Driver_AC.sch | | |
| Size: B | Document Number | Rev: v1.0.0 |
| Date: Wednesday, September 07, 2016 | Sheet 6 of 6 | |