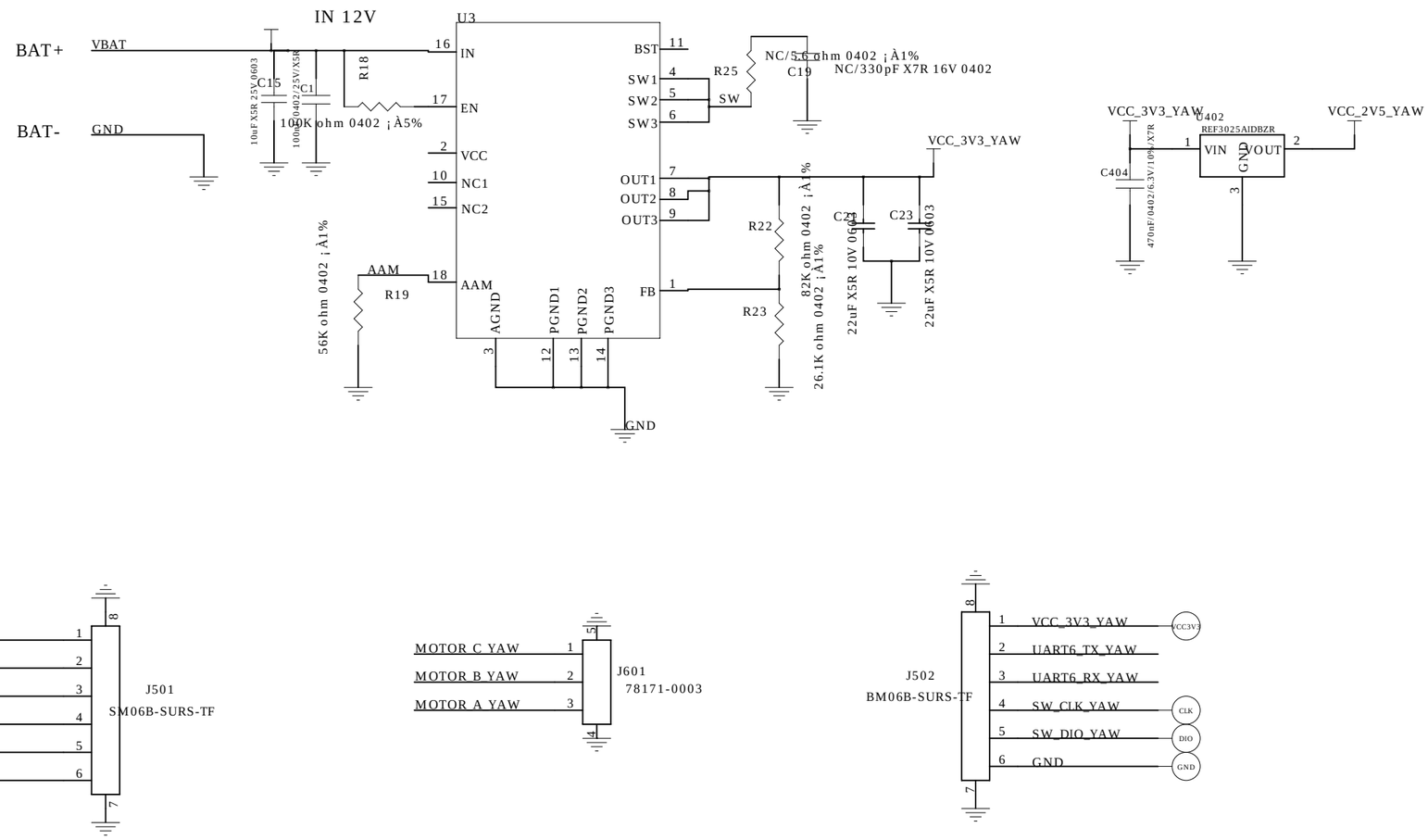

07_YAW_FOC_POWER

Title

Motor Driver Roll.sch

Size	Document Number	Rev
B		v1.0.0

Date: Wednesday, September 07, 2016 Sheet 4 of 6

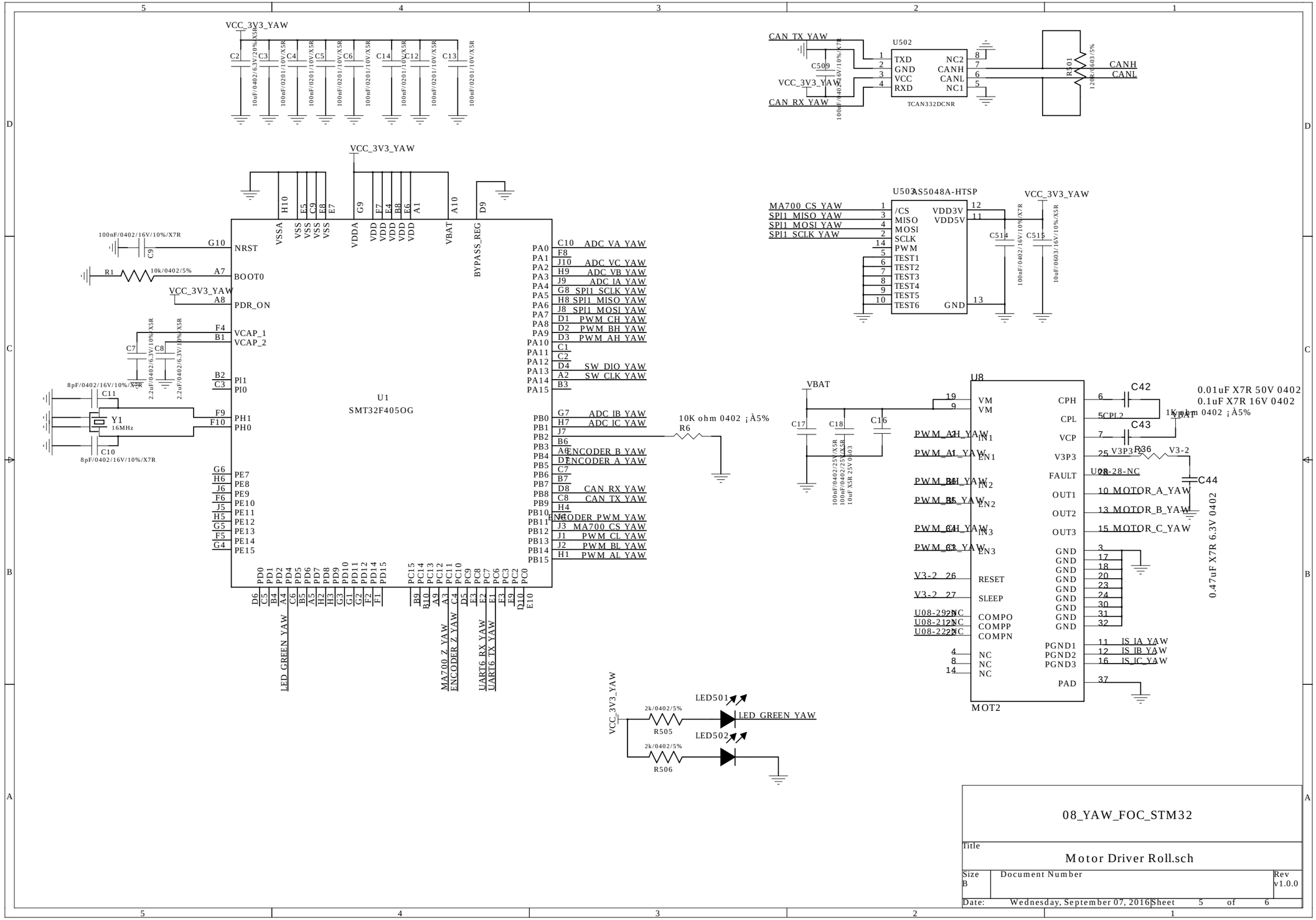

Title	08_YAW_FOC_STM32
	Motor Driver Roll.sch
Size B	Document Number
Rev	v1.0.0
Date:	Wednesday, September 07, 2016
Sheet	5 of 6

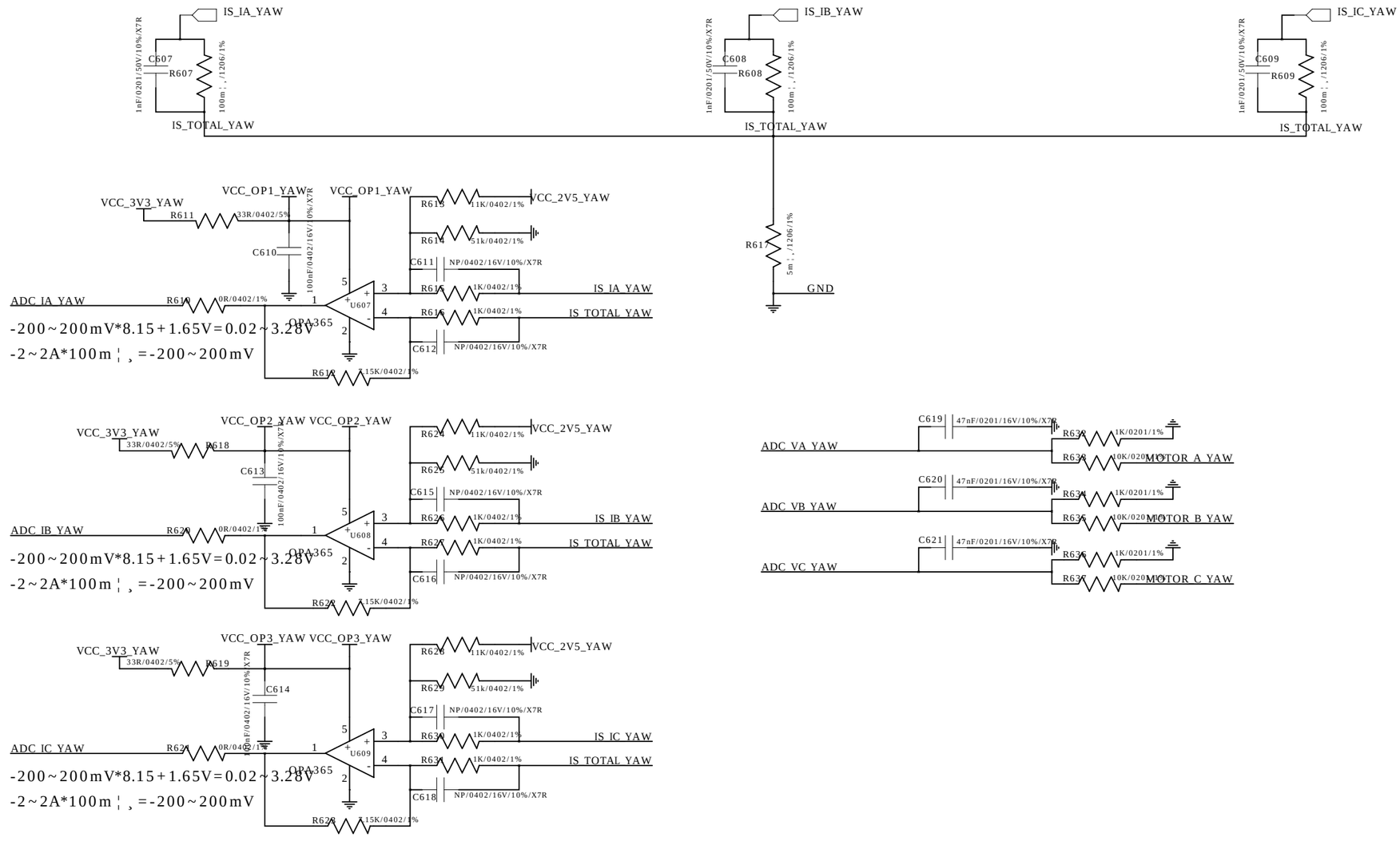

09_YAW_FOC_MOS

Title

Motor Driver Roll.sch

Size	Document Number	Rev
B		v1.0.0

Date: Wednesday, September 07, 2016 Sheet 6 of 6