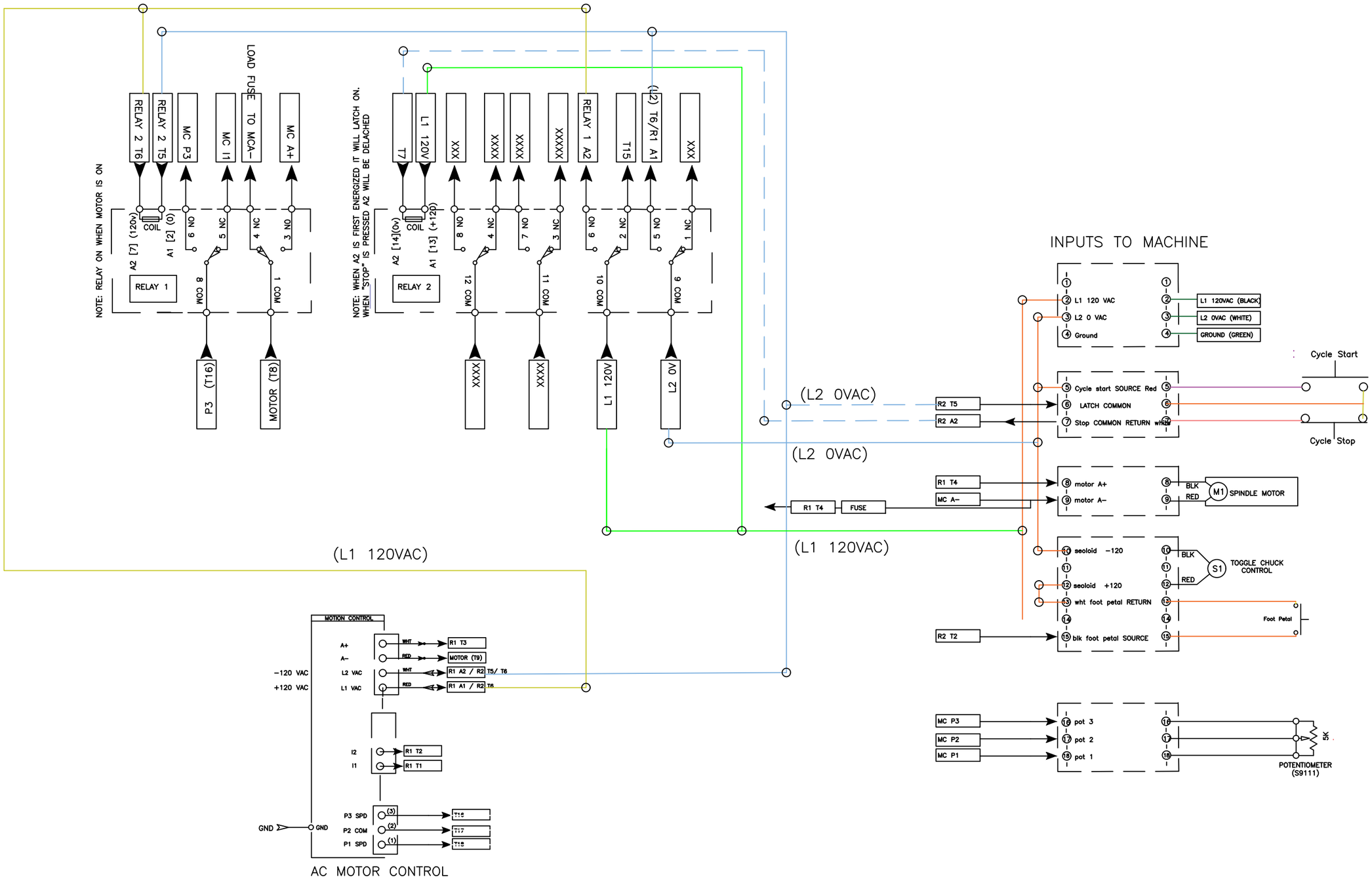

RWD Deburing System Wire Diagram

RBC
Industrial Tectonics Bearings
Automation - Electrical

REVISION	BY

DWG TITLE
TITLE#1
TITLE#2
TITLE#3
TITLE#4

ENGINEER JENKINS,M	CHECKED BY CHKDBY
JOB NO JOB#	DRAWN BY JENKINS,M
SCALE SCALE	DATE 11/26/2018
DWG NO DWG#	
SHEET NO SH# OF SHTS	

WD TB