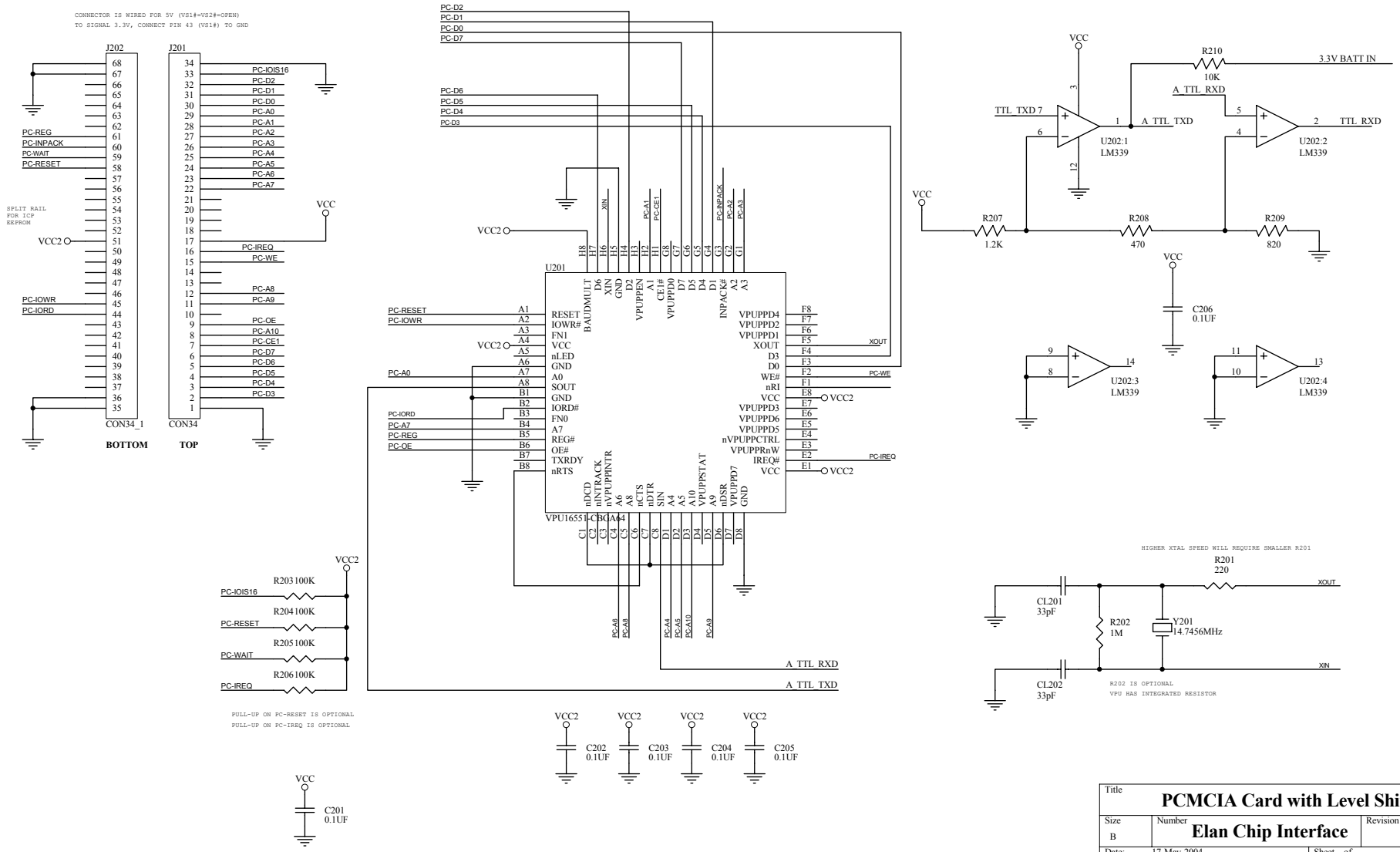
CONNECTOR IS WIRED FOR 5V (VS1#=VS2#=OPEN)
TO SIGNAL 3.3V, CONNECT PIN 43 (VS1#) TO GND
J202
J201
CON34_1
CON34
BOTTOM
TOP
SPLIT RAIL FOR ICP EEPROM
VCC2
VCC
PC-REG
PC-INPACK
PC-WAIT
PC-RESET
PC-IOIS16
PC-D2
PC-D1
PC-D0
PC-A0
PC-A1
PC-A2
PC-A3
PC-A4
PC-A5
PC-A6
PC-A7
PC-IREQ
PC-WE
PC-A8
PC-A9
PC-IOWR
PC-IORD
PC-OE
PC-A10
PC-CE1
PC-D7
PC-D6
PC-D5
PC-D4
PC-D3
U201
VPU16551-CBCIA64
RESET
IOWR#
FN1
VCC
nLED
GND
A0
SOUT
GND
IORD#
FN0
A7
REG#
OE#
TXRDY
nRTS
BAUDMULT
D6
XIN
GND
D2
VPUPPEN
A1
CE1#
VPUPPD0
D7
D5
D4
D3
INPACK#
A2
A3
VPUPPD4
VPUPPD2
VPUPPD1
XOUT
D3
D0
WE#
nRI
VCC
VPUPPD3
VPUPPD6
VPUPPD5
nVPUPPCTRL
VPUPPRnW
IREQ#
VCC
nDCD
nINTRACK
nVPUPPINTR
A6
A8
nCTS
nDTR
SIN
A4
A5
A10
VPUPPSTAT
A9
nDSR
VPUPPD7
GND
A_TTL_RXD
A_TTL_TXD
R203 100K
R204 100K
R205 100K
R206 100K
PULL-UP ON PC-RESET IS OPTIONAL
PULL-UP ON PC-IREQ IS OPTIONAL
C201 0.1UF
C202 0.1UF
C203 0.1UF
C204 0.1UF
C205 0.1UF
R210 10K
3.3V BATT IN
TTL_TXD
TTL_RXD
U202:1 LM339
U202:2 LM339
U202:3 LM339
U202:4 LM339
R207 1.2K
R208 470
R209 820
C206 0.1UF
HIGHER XTAL SPEED WILL REQUIRE SMALLER R201
R201 220
CL201 33pF
CL202 33pF
R202 1M
Y201 14.7456MHz
R202 IS OPTIONAL
VPU HAS INTEGRATED RESISTOR
Title
PCMCIA Card with Level Shifter
Size
B
Number
Elan Chip Interface
Revision
00
Date: 17-May-2004
Sheet 6 of 6
File: C:\Protel Files\PCMCIA Card\PCMCIA Card with Level Shifter\PCMCIA Card with Level Shifter.
Drawn by: