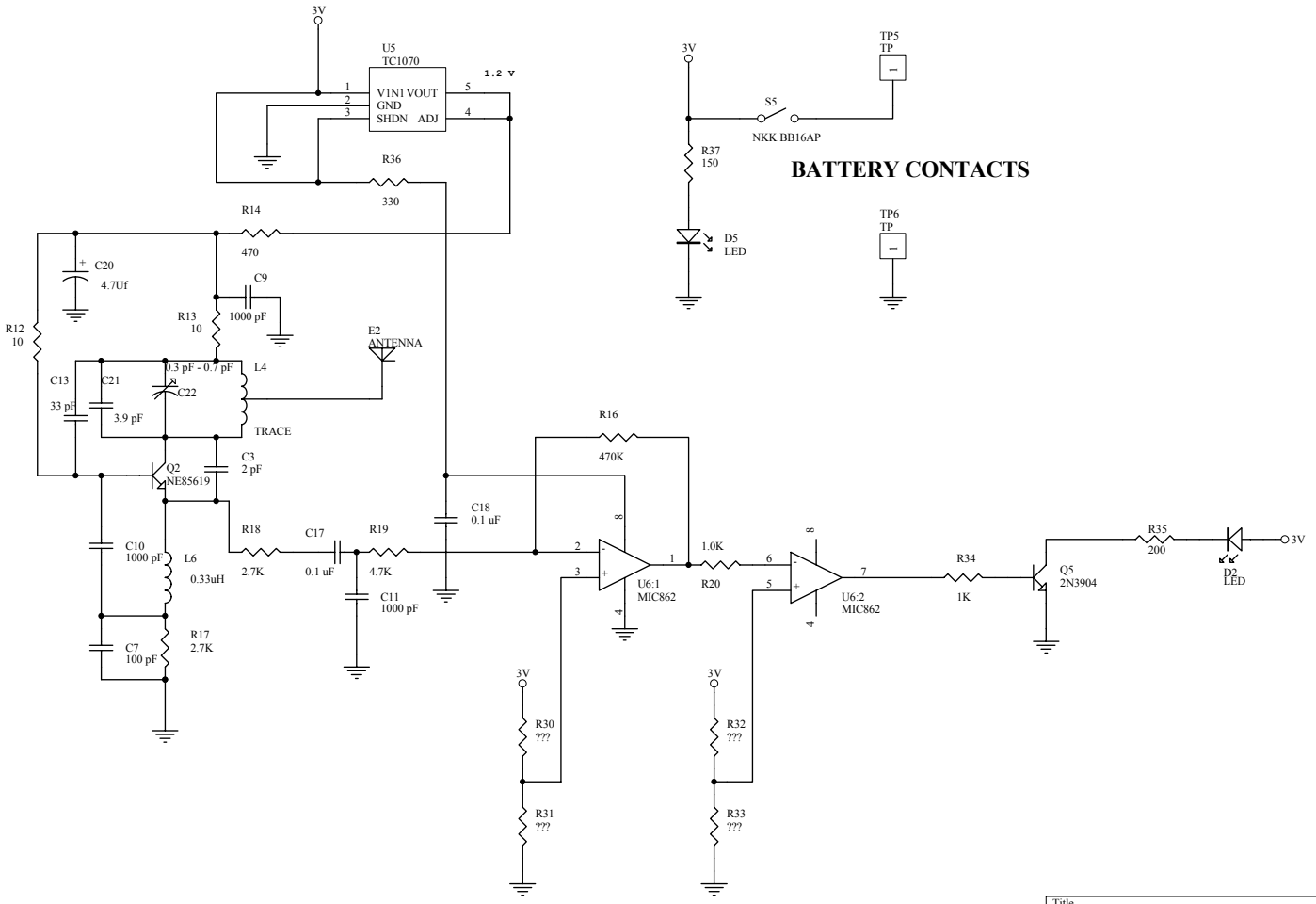

BATTERY CONTACTS

Title	**Field Generator Calibration Tool**	
Size: B	Number: **ACTIVE WAVE**	Revision: **00**
Date: 4-Jun-2004	Sheet of	3 of 3
File: C:\Protel Files\Field Generator Calibration Tool.Ddb	Drawn By:	