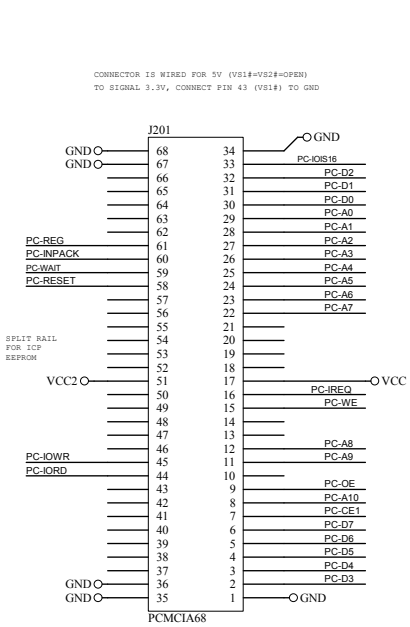

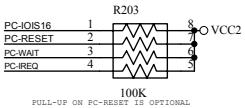

PULL-UP ON PC-RESET IS OPTIONAL
PULL-UP ON PC-IREQ IS OPTIONAL

ANY CERAMIC

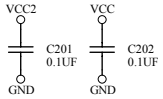

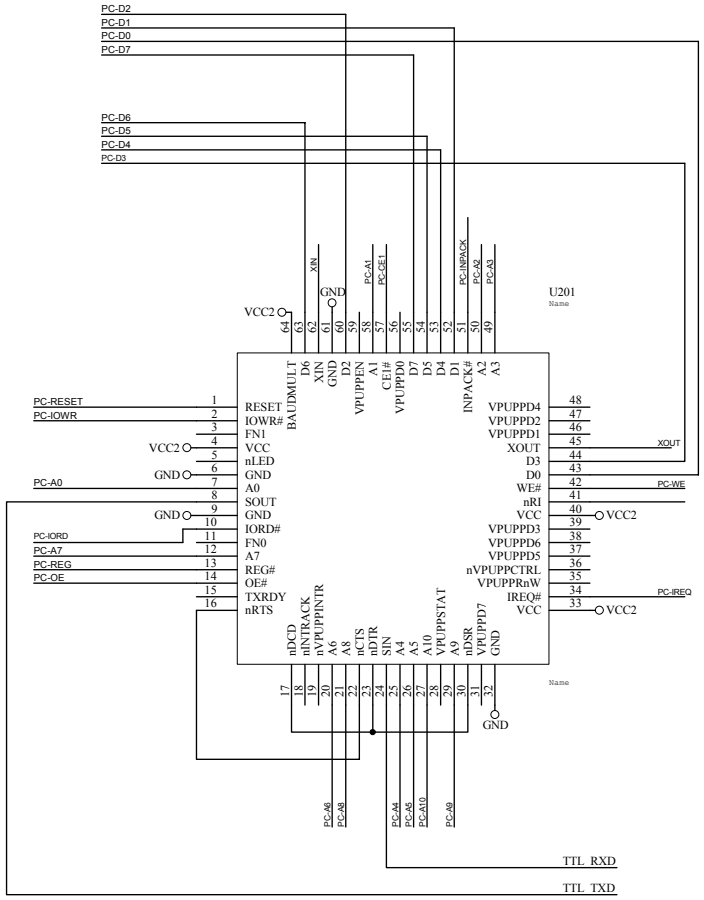

HIGHER XTAL SPEED WILL REQUIRE SMALLER R1

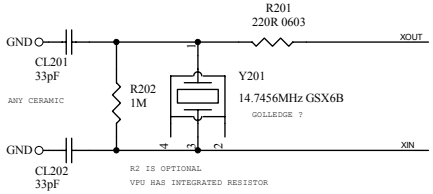

ANY CERAMIC

R2 IS OPTIONAL
VPU HAS INTEGRATED RESISTOR

Title	**PCMCIA Card**		
Size B	Number **Elan Chip Interface**		Revision **00**
Date: 29-Apr-2004		Sheet of	**6 of 6**
File: C:\Protel Files\PCMCIA Card\PCMCIA Card.ddb		Drawn By:	**404KK**