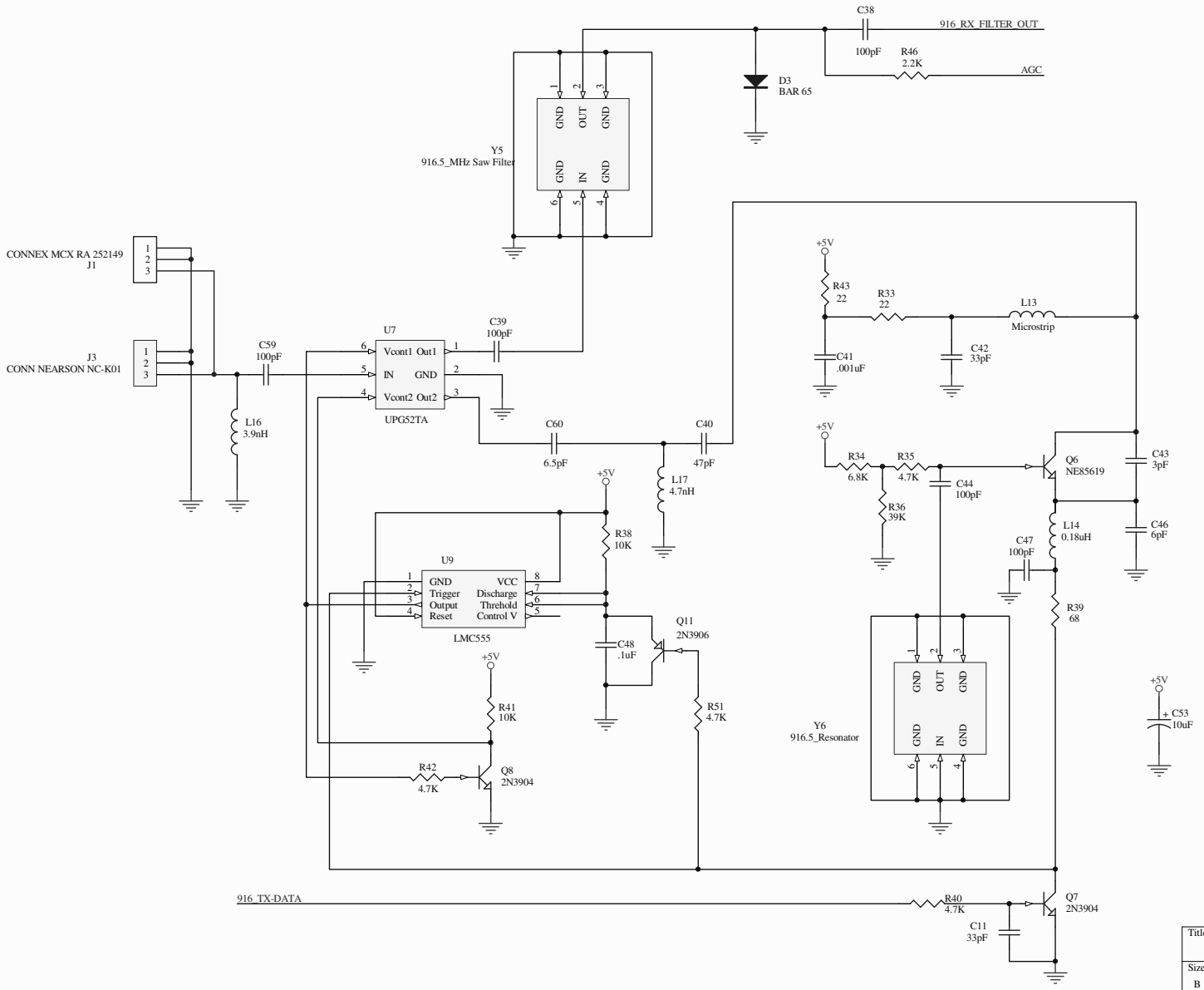

Title	**Compact Flash Reader2**		
Size B	Number		Revision **02**
Date: 4/22/2010		Sheet of	**1 of 6**
File: G:\Protel Files\..\Analog3.schdoc		Drawn By:	**307KK**