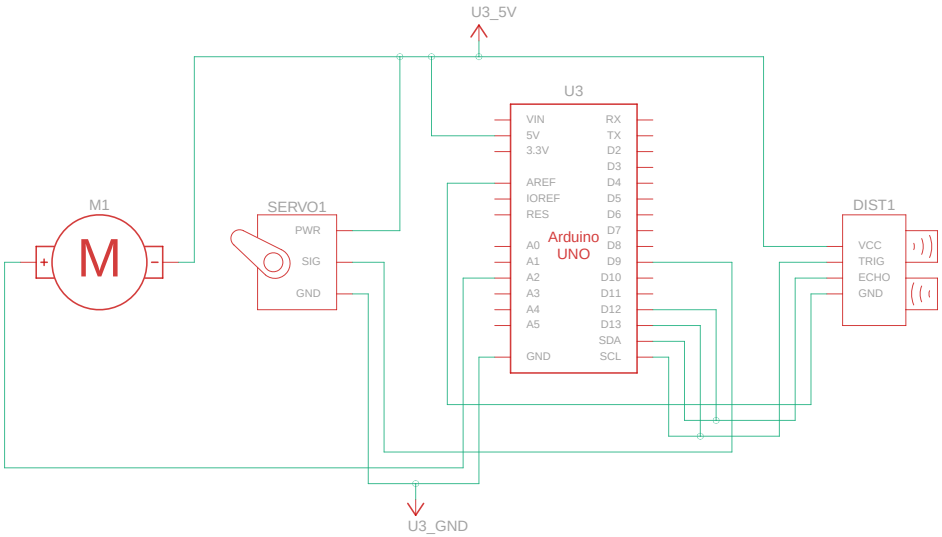

Made with Tinkercad®

Title: Smashing Hillar

Date: 13/7/2023, 12:50:48

Sheet: 1/1