TACTRACE V1

Wire Fault Troubleshooting Trainer

System: Tactical Circuit Tracing & Evaluation System
Version: V1 Prototype
Supply Voltage: 24V DC

Document Control

Field	Value
Document	TACTRACE V1 Training Guide
Revision	A
Date	2026-03-12
Author	Jeremy Surgeon
System	24V DC Fault Injection Trainer

Revision History

Revision	Date	Change
A	2026-03-12	Initial prototype documentation

Training Objective
This trainer teaches maintainers to diagnose electrical wiring faults using voltage and resistance measurements.

Skills trained:
• Voltage measurement
• Continuity testing
• Fault isolation
• System troubleshooting logic

Safety

• Ensure power supply is OFF before resistance tests.
• Verify supply voltage is 24V DC before connecting trainer.
• Do not short test points with probes.

PART I — TRAINEE WORKSHEET

Objective

Diagnose an unknown wiring fault using:

- Voltage measurements
- Resistance / continuity testing

The instructor will set the trainer to an unknown fault condition.

Your task is to determine the fault.

Equipment Required

- Digital Multimeter
- TACTRACE Trainer
- 24V Power Supply

Test Points

Test Point	Description
TP1	Source voltage after power switch
TP2	Wire after fault selector
TP3	Load return
GND	Ground reference

Phase 1 — Voltage Test (Power ON)

Procedure

1. Turn the **power switch ON**.
2. Set the multimeter to **DC Voltage**.
3. Measure voltage relative to **GND**.

Record Measurements

Test Point	Measured Voltage
TP1	_____ V
TP2	_____ V
TP3	_____ V

LED State

□ ON

□ OFF

Phase 2 — Resistance / Continuity Test (Power OFF)

⚠ **Important:** Turn the **power switch OFF** before performing resistance tests.

Set the multimeter to:

Ω (resistance) or continuity mode

Test 1 — TP1 to TP2

Measure resistance between:

TP1 → TP2

Measurement	Result
Resistance	_____ Ω

Continuity	☐ Yes ☐ No

Test 2 — TP2 to TP3

Measure resistance between:

TP2 → TP3

Measurement	Result
Resistance	_____ Ω
Continuity	☐ Yes ☐ No

Test 3 — TP2 to Ground

Measure resistance between:

`TP2 → GND`

Measurement	Result
Resistance	_____ Ω
Continuity	☐ Yes ☐ No

Fault Diagnosis

Using both voltage and resistance measurements, determine the fault.

```
☐ Normal Operation
☐ Open Circuit
☐ Short to Ground
☐ Short to Power
```

Troubleshooting Logic HINTs
If TP1 = 24V → Power source is good
If TP2 = 0V but TP1 = 24V → Fault between TP1 and TP2
If TP2 = 24V with power switch OFF → Short to Power

If TP2 = 0V and continuity to GND → Short to Ground

Troubleshooting Explanation

Explain how you determined the fault.

_____

_____

_____

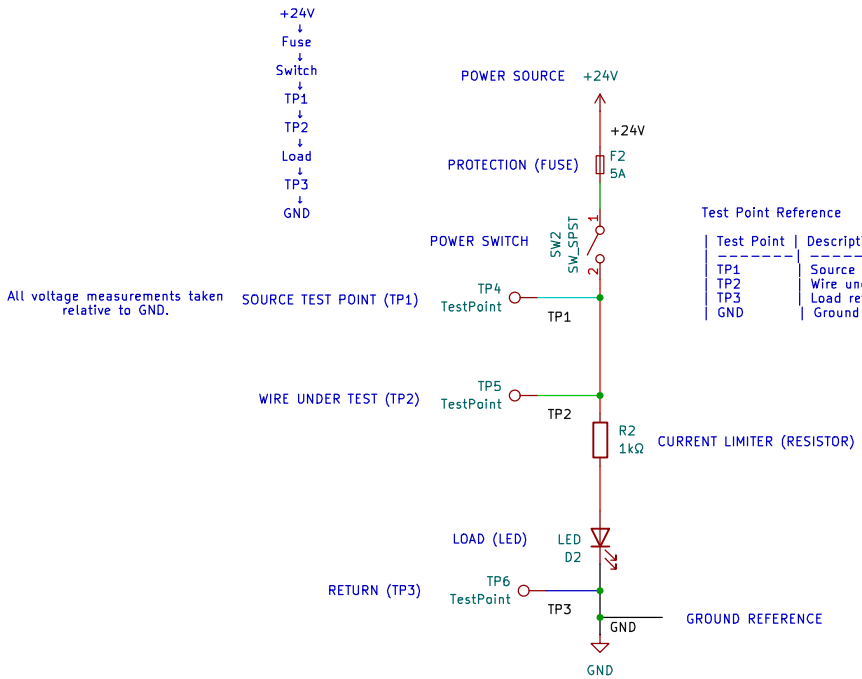

Test Point Reference

Test Point	Description	Normal Voltage
TP1	Source voltage after power switch	24V
TP2	Wire under test	24V
TP3	Load return	0V
GND	Ground reference	0V

Electrical Schematic / Wiring Diagram
Prototype V1
24V DC 3-Level Wire Fault Training System
Designed by: Jeremy Surgeon
TACTRACE Development

Sheet: /Tactrace V1 SIMPLE SCHEMATIC/
File: TacTrace_V1_Simple_Schematic.kicad_sch

Title: TACTRACE V1 - Wire Fault Injection Trainer

Size: A4	Date: 2026-03-12	**Rev: A**
KiCad E.D.A. 9.0.7		Id: 2/2

PART II — INSTRUCTOR REFERENCE

Trainer Description

TACTRACE V1 is a fault injection trainer designed to simulate common wiring failures encountered in aircraft electrical systems.

The trainer simulates:

- Normal circuit operation
- Open wire faults
- Short-to-ground faults
- Short-to-power faults

These faults are selected using a **4-position rotary switch**.

Electrical Overview

Circuit path:

24V Supply

|

Fuse

|

Power Switch

|

TP1

|

Fault Selector (Rotary)

|

TP2

|

Resistor

|

LED

|

TP3

|

Ground

Fault Selector Positions

Position	Fault Condition
1	Normal
2	Open Circuit
3	Short to Ground
4	Short to Power

Expected Voltage Measurements

Fault Mode	TP1	TP2	TP3	LED
Normal	24V	24V	0V	ON
Open Circuit	24V	0V	0V	OFF
Short to Ground	24V	0V	0V	OFF
Short to Power	0V (switch off)	24V	0V	ON

Expected Resistance Measurements

Power OFF for all resistance/continuity checks.

Fault	TP2→GND	TP1→TP2	TP2→TP3
Normal	Open / high Ω	Continuity	LED + resistor path
Open Circuit	Open / high Ω	Open / high Ω	LED + resistor path
Short to Ground	Continuity / very low Ω	Open / high Ω	Continuity / very low Ω
Short to Power	Open / high Ω	Open / high Ω	LED + resistor path

Notes for the instructor

TP2→GND

- **Normal:** no direct short to ground, so this should read open or high resistance.
- **Open:** still open/high resistance.
- **Short to Ground:** this should read near 0 Ω or continuity.
- **Short to Power:** with power removed, this should usually read open/high resistance.

TP1→TP2

- **Normal:** continuity, because the source is connected through the normal path.
- **Open:** open, because the wire is intentionally disconnected.
- **Short to Ground:** open to TP1, because TP2 is being switched to ground instead of source.
- **Short to Power:** open to TP1, because TP2 is being switched to the alternate power path, not the normal switched path.

TP2→TP3

This one includes the **load path**, so you are measuring through the **resistor and LED**.

- On many meters, this will **not** give a simple continuity beep.
- It may show:
    - a moderate or high resistance,
    - an unstable reading,
    - or OL depending on meter polarity and how the meter handles the LED.

So for trainee documentation, I would phrase this as:

Fault	TP2→TP3 Expected
Normal	Load path present through resistor/LED
Open Circuit	Load path present through resistor/LED
Short to Ground	Near 0 Ω if TP2 is hard-grounded and TP3 is also at ground return
Short to Power	Load path present through resistor/LED

Instructor Setup Procedure

1. Ensure trainer is powered with **24V DC**.
2. Turn **POWER switch OFF**.
3. Set rotary selector to desired fault condition.
4. Turn **POWER switch ON**.
5. Instruct trainee to begin troubleshooting.

Instructor Evaluation

Student	Fault Set	Diagnosis	Pass/Fail

System Verification

Before training begins, verify the trainer functions correctly.

Checklist:

☐ Power supply = 24V

☐ Fuse installed

☐ LED functional

☐ All four rotary positions verified

☐Test points produce correct readings

Notes

_____

_____

_____

Tactrace V1 SIMPLE SCHEMATIC

File: TacTrace_V1_Simple_Schematic.kicad_sch

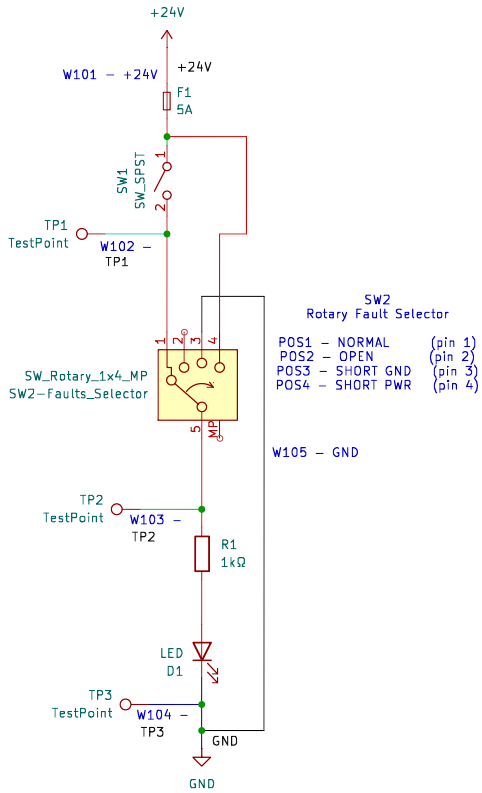

Electrical Schematic / Wiring Diagram
Prototype V1
24V DC 3–Level Wire Fault Training System
Designed by: Jeremy Surgeon
TACTRACE Development

Sheet: /
File: TacTrace_V1.kicad_sch

Title: TACTRACE V1 - Wire Fault Injection Trainer

Size: A4	Date: 2026–03–12	**Rev: A**
KiCad E.D.A. 9.0.7		Id: 1/2