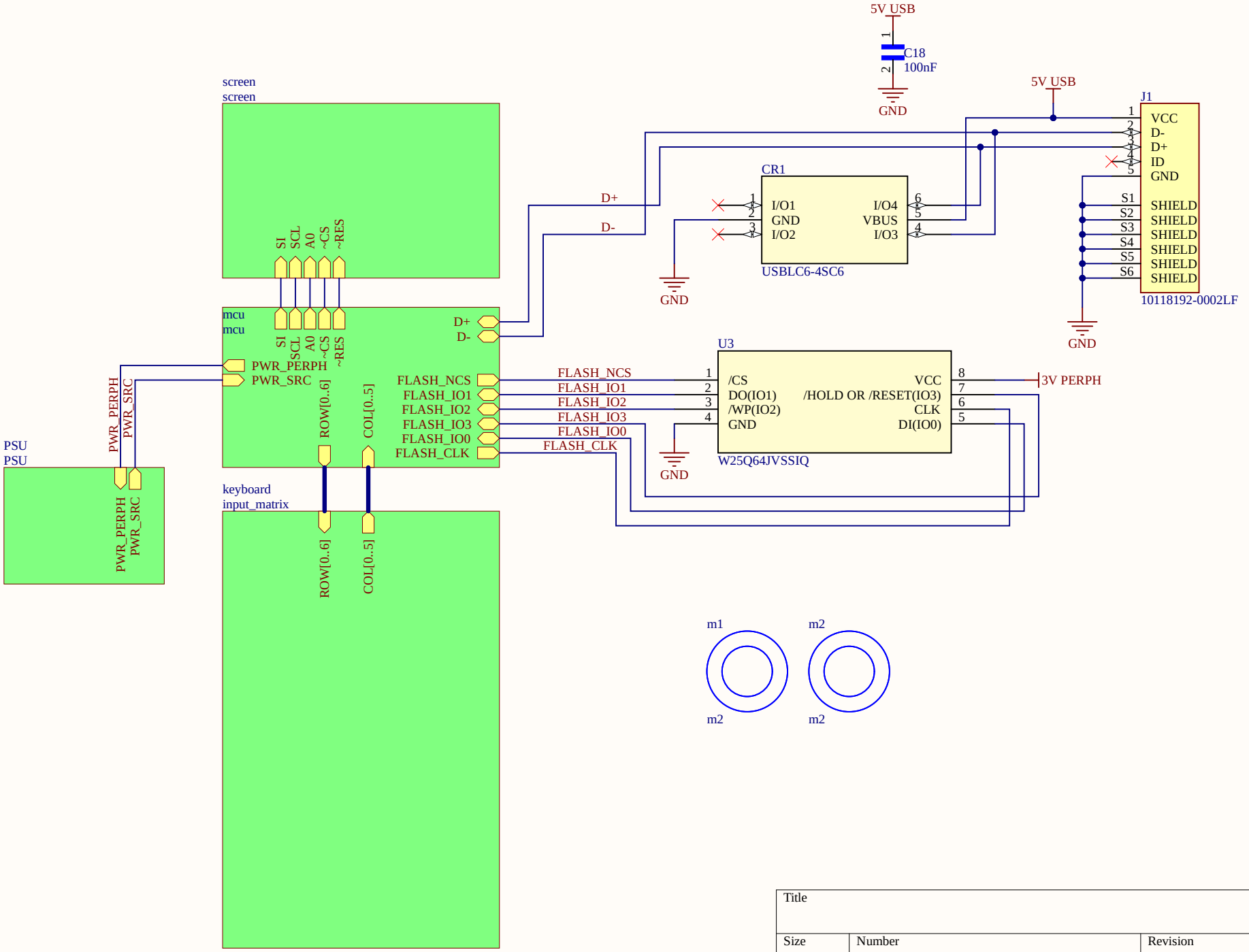

Title		
Size: A	Number	Revision
Date: 7/27/2024		Sheet of
File: C:\Users\..\main-board.SchDoc		Drawn By:

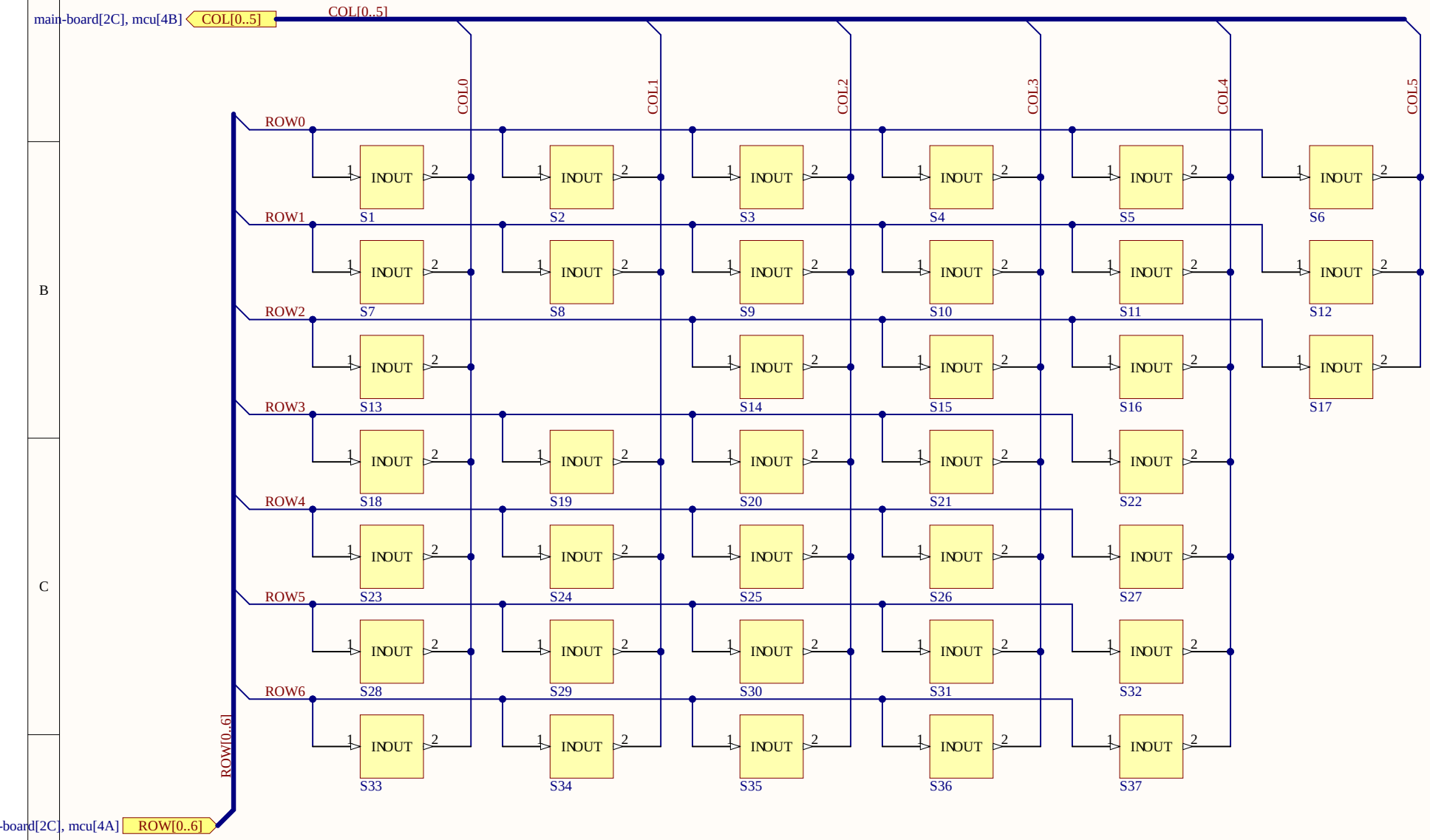

Title		
Size A	Number	Revision
Date: 7/27/2024		Sheet of
File: C:\Users\..\input_matrix.SchDoc		Drawn By:

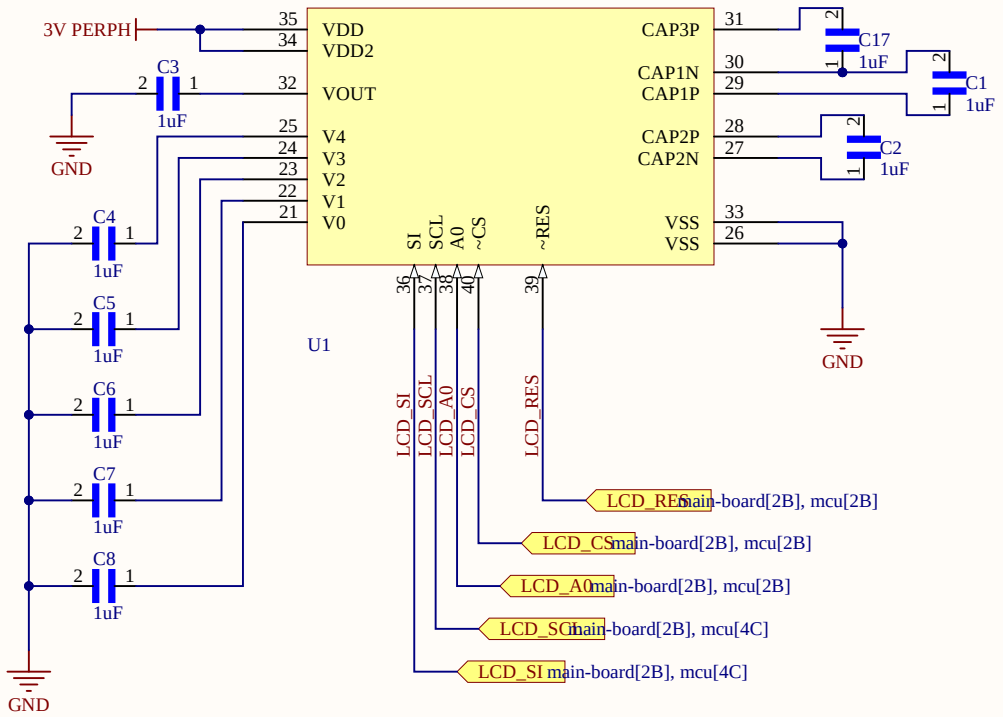

Title		
Size A	Number	Revision
Date: 7/27/2024		Sheet of
File: C:\Users\..\screen.SchDoc		Drawn By:

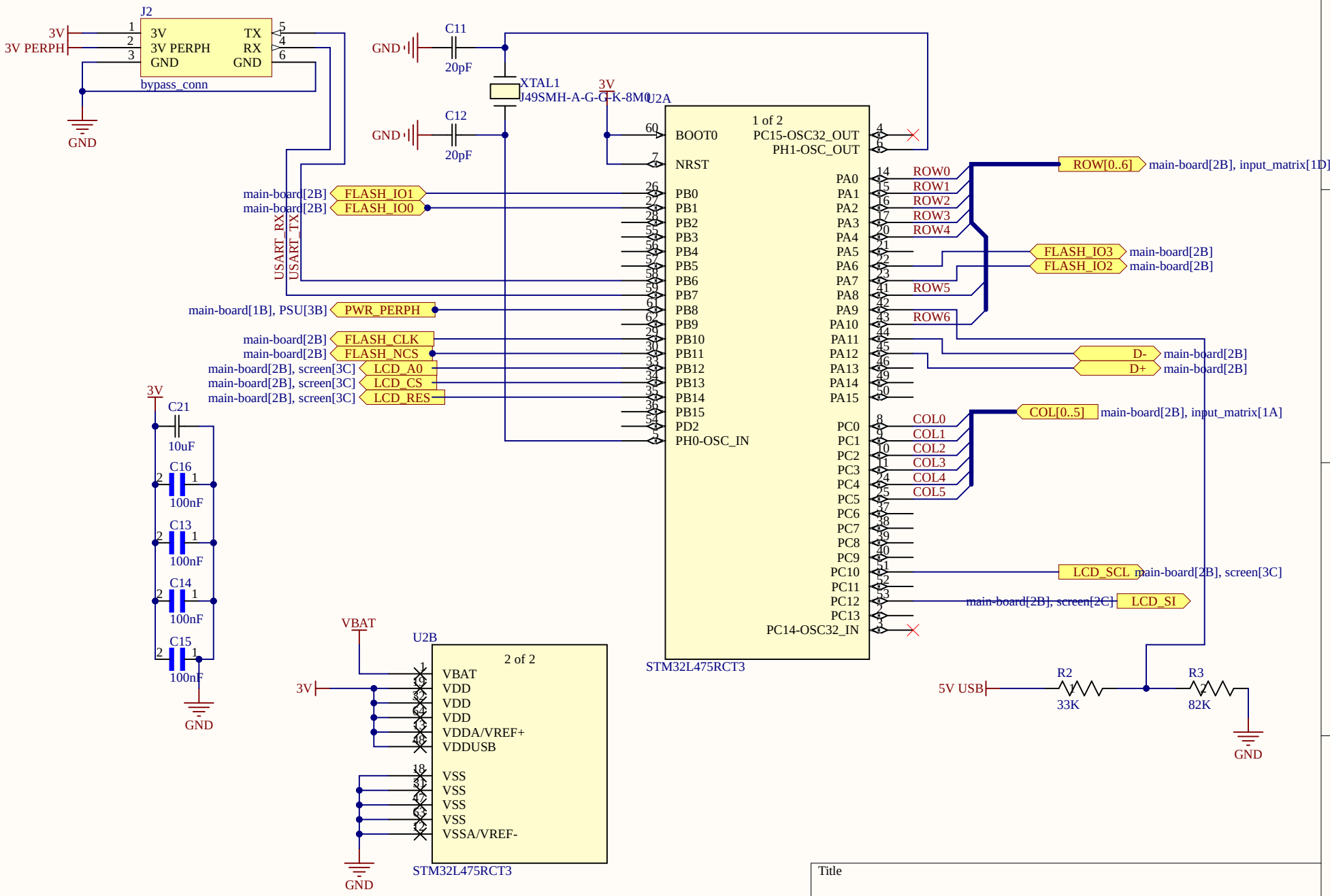
J2
3V
3V PERPH
GND
bypass_conn
C11
20pF
C12
20pF
XTAL1
J49SMH-A-G-G-K-8M0
U2A
1 of 2
BOOT0
NRST
PH0-OSC_IN
PC15-OSC32_OUT
PH1-OSC_OUT
PA0
PA1
PA2
PA3
PA4
PA5
PA6
PA7
PA8
PA9
PA10
PA11
PA12
PA13
PA14
PA15
PB0
PB1
PB2
PB3
PB4
PB5
PB6
PB7
PB8
PB9
PB10
PB11
PB12
PB13
PB14
PB15
PD2
PC0
PC1
PC2
PC3
PC4
PC5
PC6
PC7
PC8
PC9
PC10
PC11
PC12
PC13
PC14-OSC32_IN
STM32L475RCT3
main-board[2B] FLASH_IO1
main-board[2B] FLASH_IO0
USART_RX
USART_TX
main-board[1B], PSU[3B] PWR_PERPH
main-board[2B] FLASH_CLK
main-board[2B] FLASH_NCS
main-board[2B], screen[3C] LCD_A0
main-board[2B], screen[3C] LCD_CS
main-board[2B], screen[3C] LCD_RES
ROW[0..6] main-board[2B], input_matrix[1D]
ROW0
ROW1
ROW2
ROW3
ROW4
ROW5
ROW6
FLASH_IO3 main-board[2B]
FLASH_IO2 main-board[2B]
D- main-board[2B]
D+ main-board[2B]
COL[0..5] main-board[2B], input_matrix[1A]
COL0
COL1
COL2
COL3
COL4
COL5
LCD_SCL main-board[2B], screen[3C]
main-board[2B], screen[2C] LCD_SI
C21
10uF
C16
100nF
C13
100nF
C14
100nF
C15
100nF
U2B
2 of 2
VBAT
VDD
VDD
VDD
VDDA/VREF+
VDDUSB
VSS
VSS
VSS
VSS
VSSA/VREF-
STM32L475RCT3
R2
33K
R3
82K
5V USB
Title
Size
A
Number
Revision
Date: 7/27/2024
Sheet of
File: C:\Users\..\mcu.SchDoc
Drawn By:

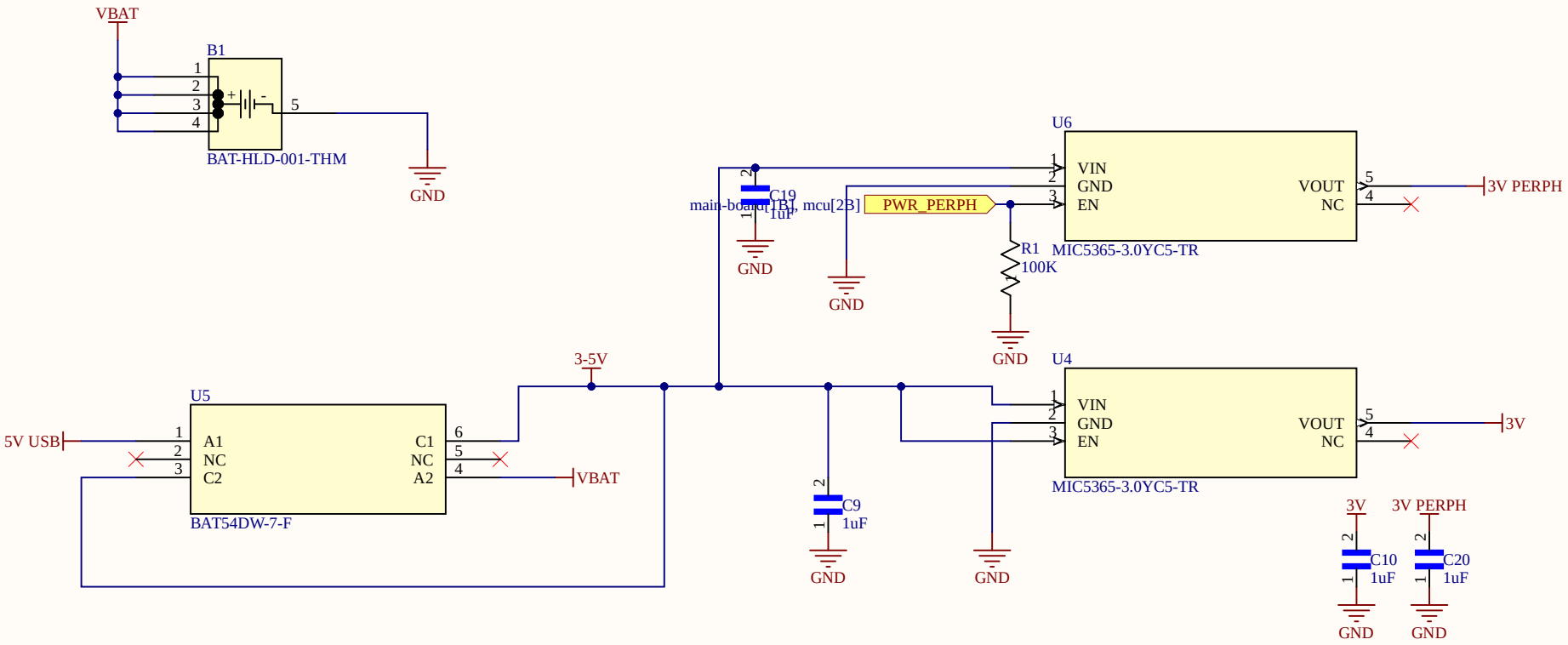

Title		
Size: A	Number	Revision
Date: 7/27/2024		Sheet of
File: C:\Users\..\PSU.SchDoc		Drawn By:

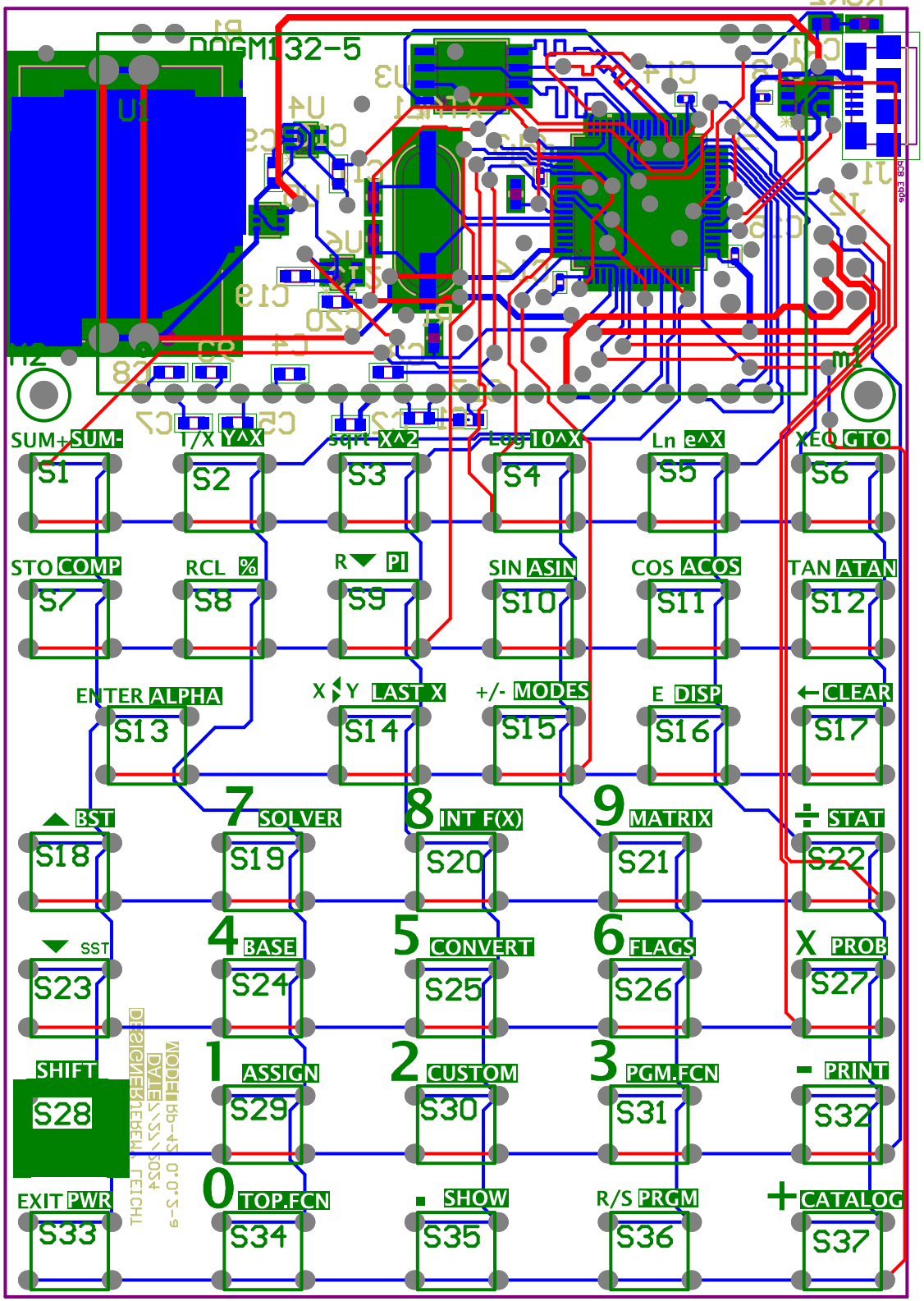
DOGM132-5
SUM+ SUM-
1/X Y^X
Sqrt X^2
Log 10^X
Ln e^X
XEQ GTO
S1
S2
S3
S4
S5
S6
STO COMP
RCL %
R▼ PI
SIN ASIN
COS ACOS
TAN ATAN
S7
S8
S9
S10
S11
S12
ENTER ALPHA
X⇕Y LAST X
+/- MODES
E DISP
←CLEAR
S13
S14
S15
S16
S17
▲ BST
7 SOLVER
8 INT F(X)
9 MATRIX
÷ STAT
S18
S19
S20
S21
S22
▼ SST
4 BASE
5 CONVERT
6 FLAGS
X PROB
S23
S24
S25
S26
S27
SHIFT
1 ASSIGN
2 CUSTOM
3 PGM.FCN
- PRINT
S28
S29
S30
S31
S32
EXIT PWR
0 TOP.FCN
▪ SHOW
R/S PRGM
+ CATALOG
S33
S34
S35
S36
S37

Line #	Name	Description	Designator	Quantity	Manufacturer 1	Manufacturer Part Number 1	Manufacturer Lifecycle 1	Supplier 1	Supplier Part Number 1	Supplier Unit Price 1	Supplier Subtotal 1
	BAT-HLD-001-THM	CR2032 Battery holder. 2.7V-3V. https://www.digikey.com/en/products/detail/te-connectivity-linx/BAT-HLD-001-THM/3044009	B1	1				Digikey	BAT-HLD-001-THM-ND		
	1uF	CL10B105KP8NNNC	C1, C2, C3, C4, C5, C6, C7, C8, C17, C20	10				[NoParam], Avnet	[NoParam], CL10B105KP8NNNC		
	1uF	CL10B105KP8NNNC https://www.digikey.com/en/products/detail/samsung-electro-mechanics/CL10B105KP8NNNC/3887604?s=N4IgTCBcDaIMIBkCMAGAQqgrAaQAoA4A5YuEAXQF8g	C9, C19	2				Avnet	CL10B105KP8NNNC		
	1uF	CL10B105KP8NNNC https://www.digikey.com/en/products/detail/samsung-electro-mechanics/CL10B105KP8NNNC/3887604?s=N4IgTCBcDaIMIBkCMAGAQqgrAaQAoA4A5YuEAXQF8g	C10	1				Avnet	CL10B105KP8NNNC		
	20pF	CL10C200JB8NNNC	C11, C12	2							
	100nF	0.1ÂµF Â±10% 10V Ceramic Capacitor X7R 0402 _1005 Metric_	C13, C14, C15, C16, C18	5							
	10uF	CL10A106KQ8NNNL	C21	1							
	USBLC6-4SC6	No Description Available	CR1	1							
	10118192-0002LF	Micro USB 2.0, Input Output Connectors, B TYPE RECEPTACLE without flange	J1	1							
	bypass_conn	Bypass connector for power supply and backup chip programming	J2	1							
	m2		m1, m2	2							
	100K	RC0603FR-07100KL	R1	1							
	33K	RMCF0603FT33K0	R2	1							
	82K	RC0603FR-0782KL	R3	1							
	temp_switch		S1, S2, S3, S4, S5, S6, S7, S8, S9, S10, S11, S12, S13, S14, S15, S16, S17, S18, S19, S20, S21, S22, S23, S24, S25, S26, S27, S28, S29, S30, S31, S32, S33, S34, S35, S36, S37	37							
	EADOGM132W	EADOGM132W. https://www.digikey.com/en/products/detail/display-visions/EA-DOGM132L-5/4896710	U1	1							
	STM32L475RCT3	STM32 - 256KB, 128KB RAM, USB OTG, QUAD SPI https://www.st.com/en/microcontrollers-microprocessors/stm32l475rc.html#overview	U2	1							
	W25Q64JVSSIQ	W25Q64JVSSIQ. 64MBit Quad-SPI flash	U3	1							
	MIC5365-3.0YC5-TR	3V Linear Voltage Regulator. https://www.digikey.com/en/products/detail/microchip-technology/MIC5365-3-0YC5-TR/1868092?s=N4IgTCBcDaIUEkDCBWAzANhQMjQOgAYBNVbAFQCUQBdAXyA	U4, U6	2				Newark	55AC2794		
	BAT54DW-7-F	2 Diode Array, 30V@100mA, Surface mount. Schottky. 6-TSSDP. https://www.diodes.com/assets/Datasheets/BAT54DW.pdf	U5	1				Arrow Electronics	BAT54DW-7-F		
	J49SMH-A-G-G-K-8M0	No Description Available	XTAL1	1							