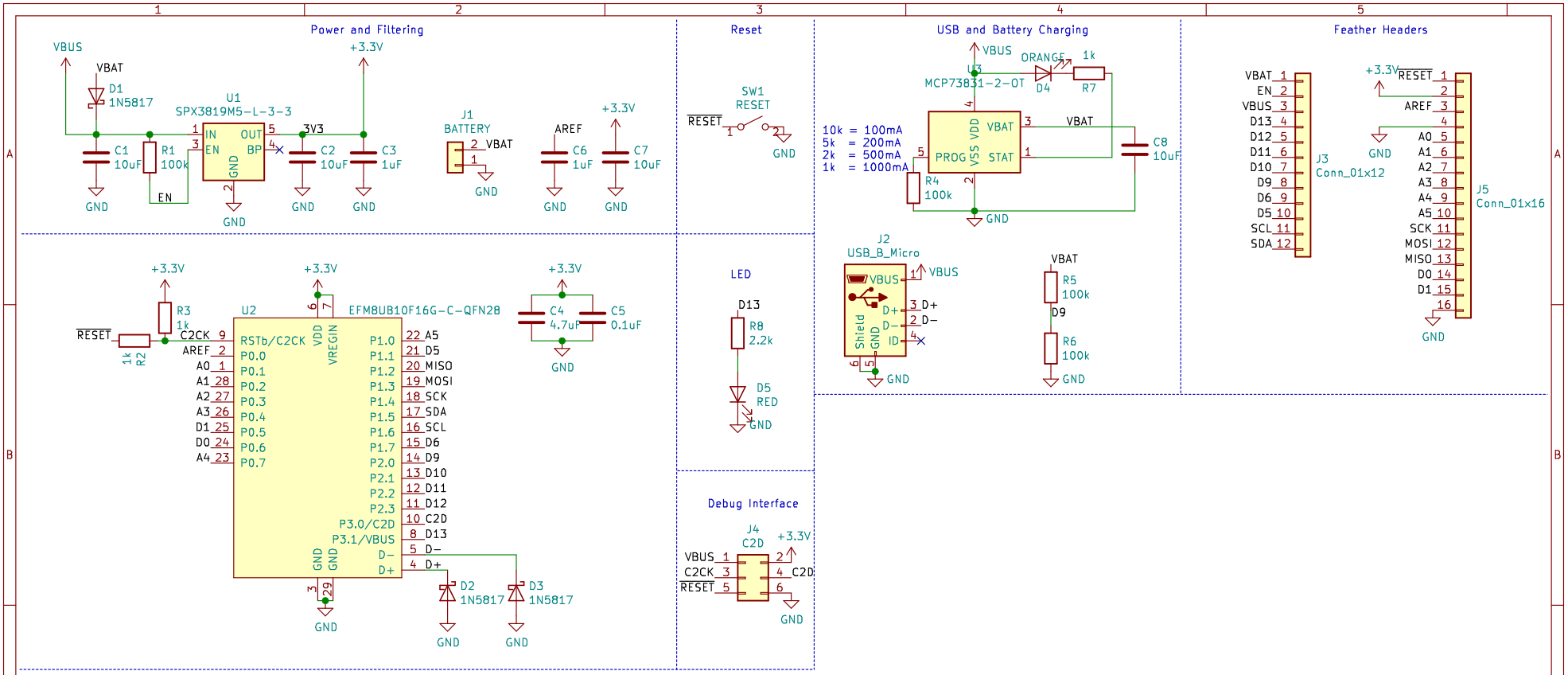

jeremy@synack.me

LEGITIMATE DATA COMPANY

Sheet: /

File: feather51.sch

Title: FEATHER51

Size: USLetter	Date: 2019-04-16	Rev: A
KiCad E.D.A. kicad 5.0.2+dfsg1-1		Id: 1/1