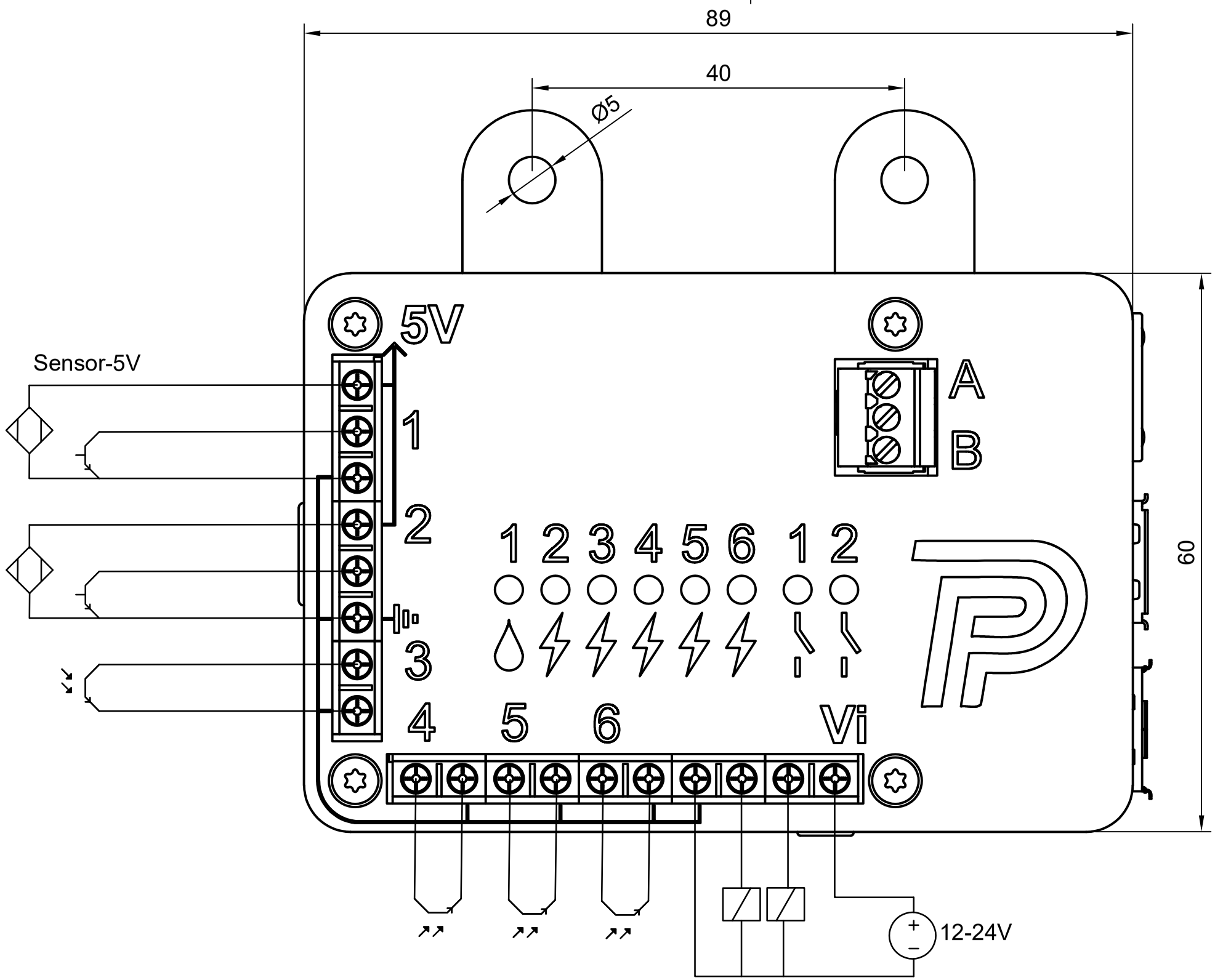

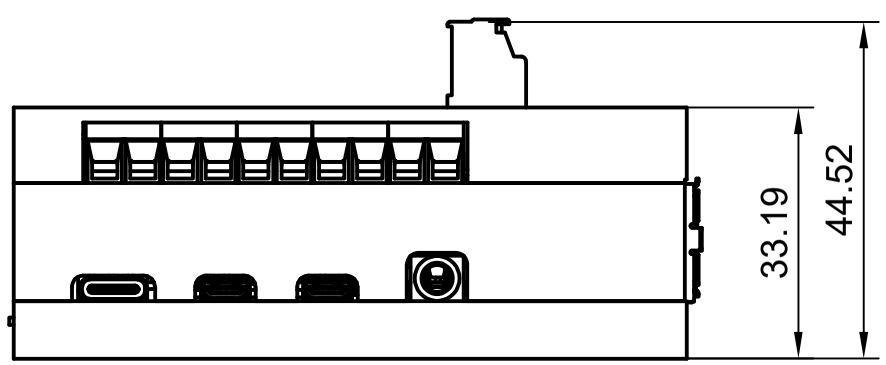

Dept.	Technical reference	Created by	Approved by
		Jeroen Lodder 2021-07-06	
		Document type	Document status
		Title Assembly-RasPi-P1-HAT-B	DWG No.
			Rev. / Date of issue / Sheet 1/1