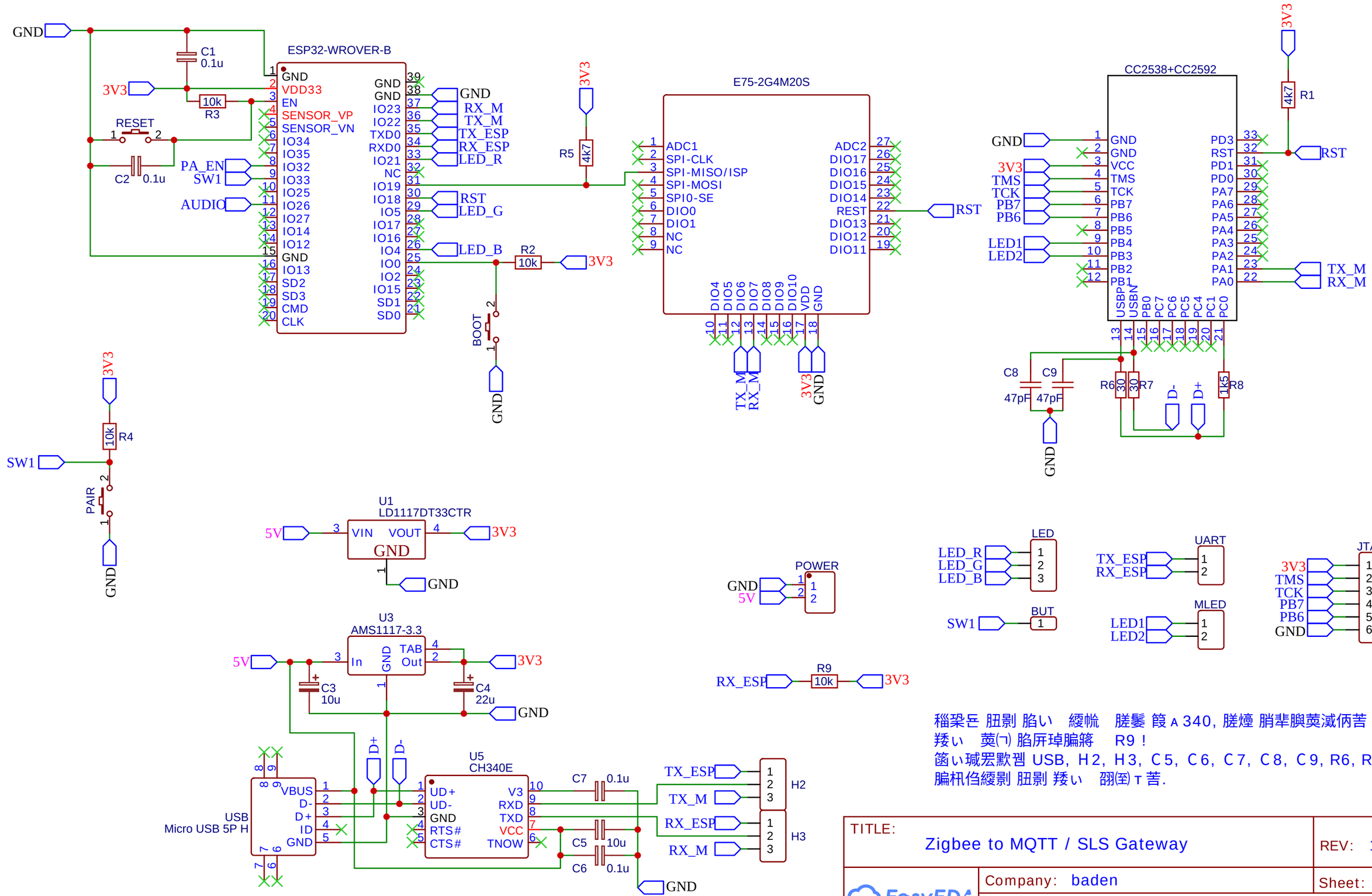

稲梁臣 肛剽 胎い 緩帆 膳鬟 筏 A 340, 膳燼 梢辈腆萸溅俩苦 RX_ESP 矮い 萸(ㄱ) 胎厾琸腧簿 R9 !
箇い瑊罢歟鬯 USB, H2, H3, C5, C6, C7, C8, C9, R6, R7 B 莘簿 腧杌佟緩剽 肛剽 矮い 翎(至) T 菩.

TITLE: Zigbee to MQTT / SLS Gateway		REV: 1.0
EasyEDA	Company: baden	Sheet: 1/1
	Date: 2020-05-27 Drawn By: baden	