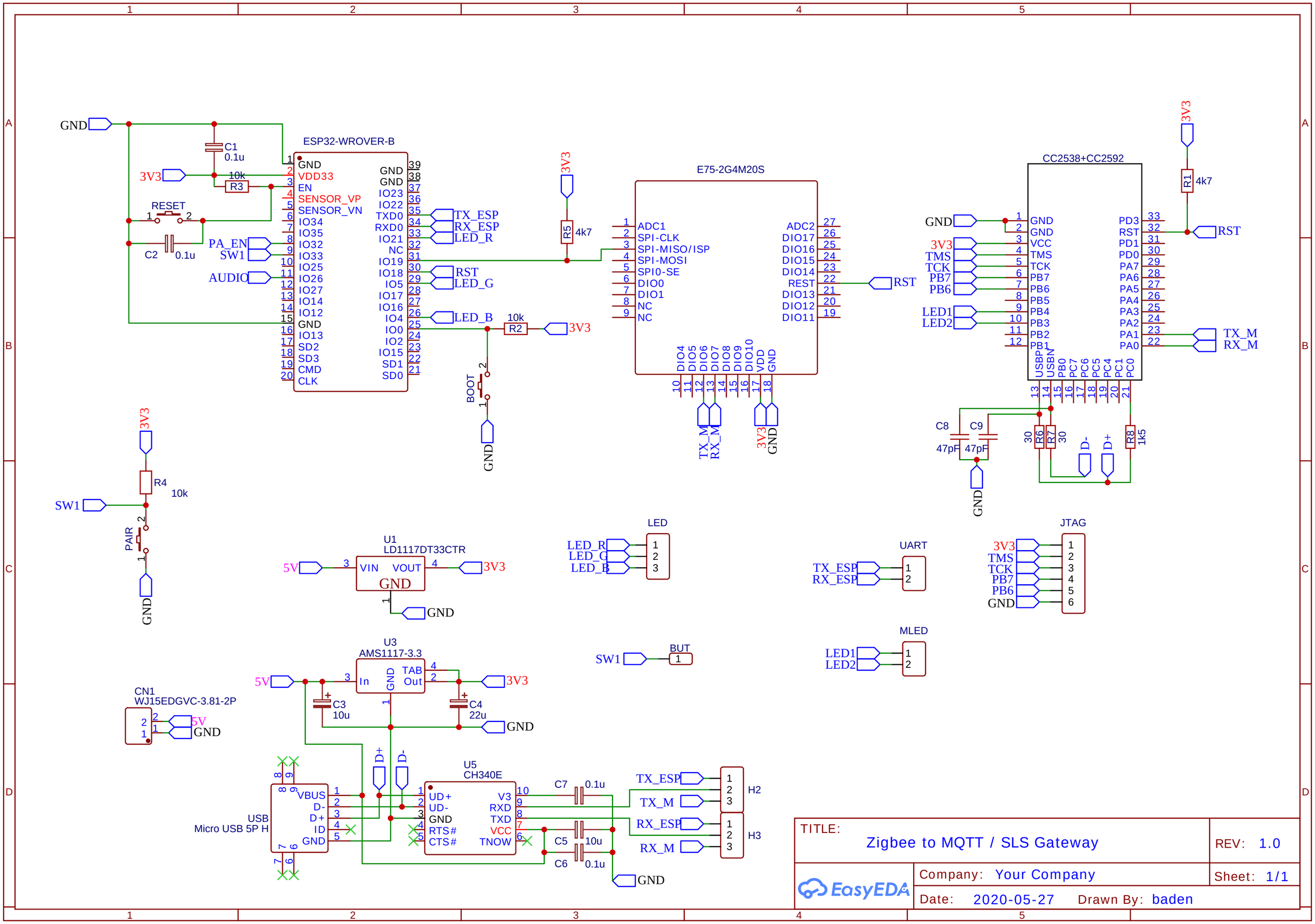
ESP32-WROVER-B
E75-2G4M20S
CC2538+CC2592
U1
LD1117DT33CTR
U3
AMS1117-3.3
U5
CH340E
CN1
WJ15EDGVC-3.81-2P
USB
Micro USB 5P H
LED
UART
JTAG
MLED
BUT
RESET
BOOT
PAIR
TITLE:
Zigbee to MQTT / SLS Gateway
REV: 1.0
Company: Your Company
Sheet: 1/1
Date: 2020-05-27
Drawn By: baden
EasyEDA