Software Engineering Project

Thomas Luvö tom@samoht.se @tomluvoe

Today

- Scrum
  - In theory
  - In practice, getting started with Scrum

What is Scrum?

Traditional waterfall project

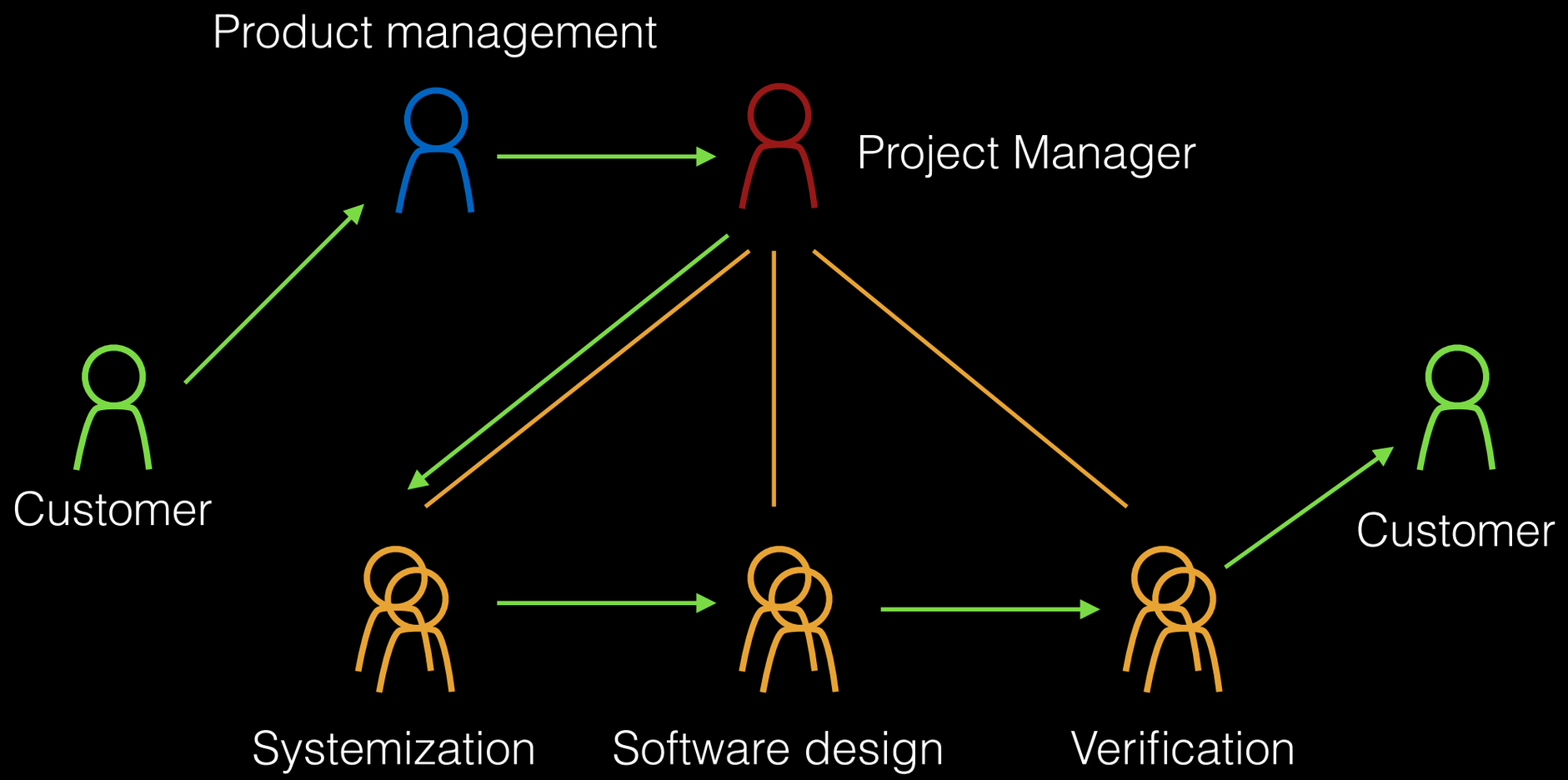

Traditional Project Planning

- Product requirements can be specified up front
- The product requirements do not change over time
- The customers know what product they want before they see it

Reality

- Product requirements will change between specification of a product and delivery
- Humphrey's Requirements Uncertainty Principle: A system can not fully be understood before it has been used
- Ziv's Uncertainty Principle for Software Development: That uncertainty and unpredictability is always part of software development
- Wegner's Lemma: It is not possible to fully specify an interactive system

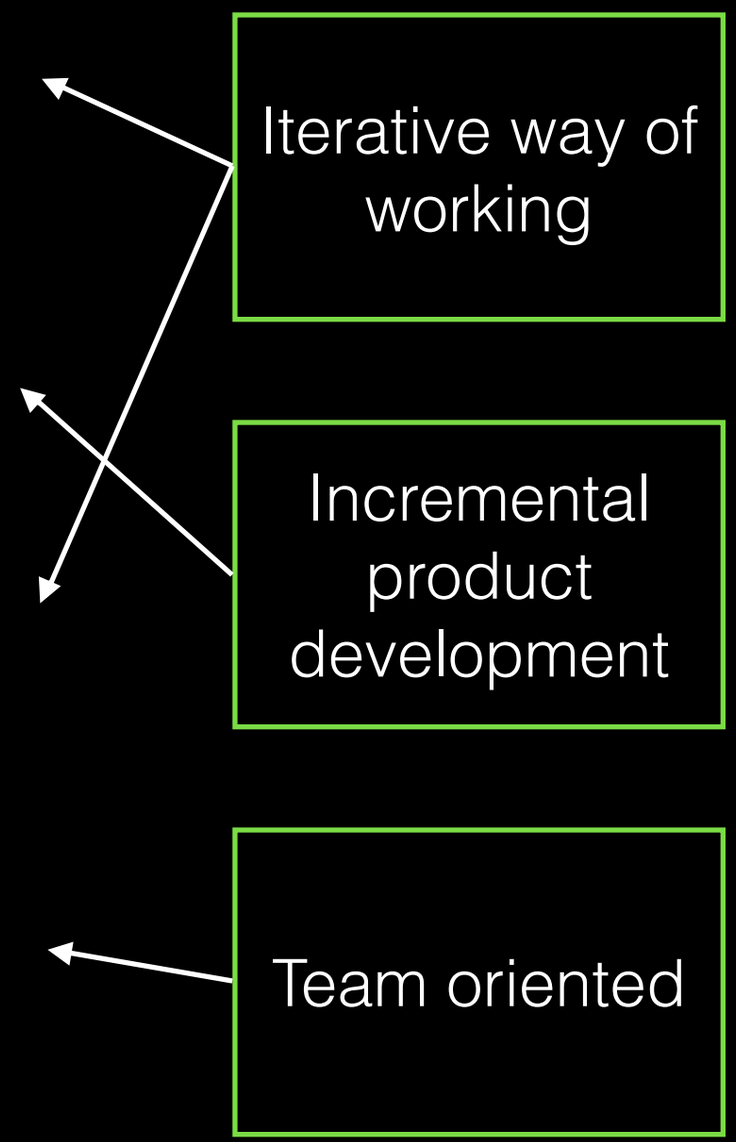

What is Scrum?

Scrum

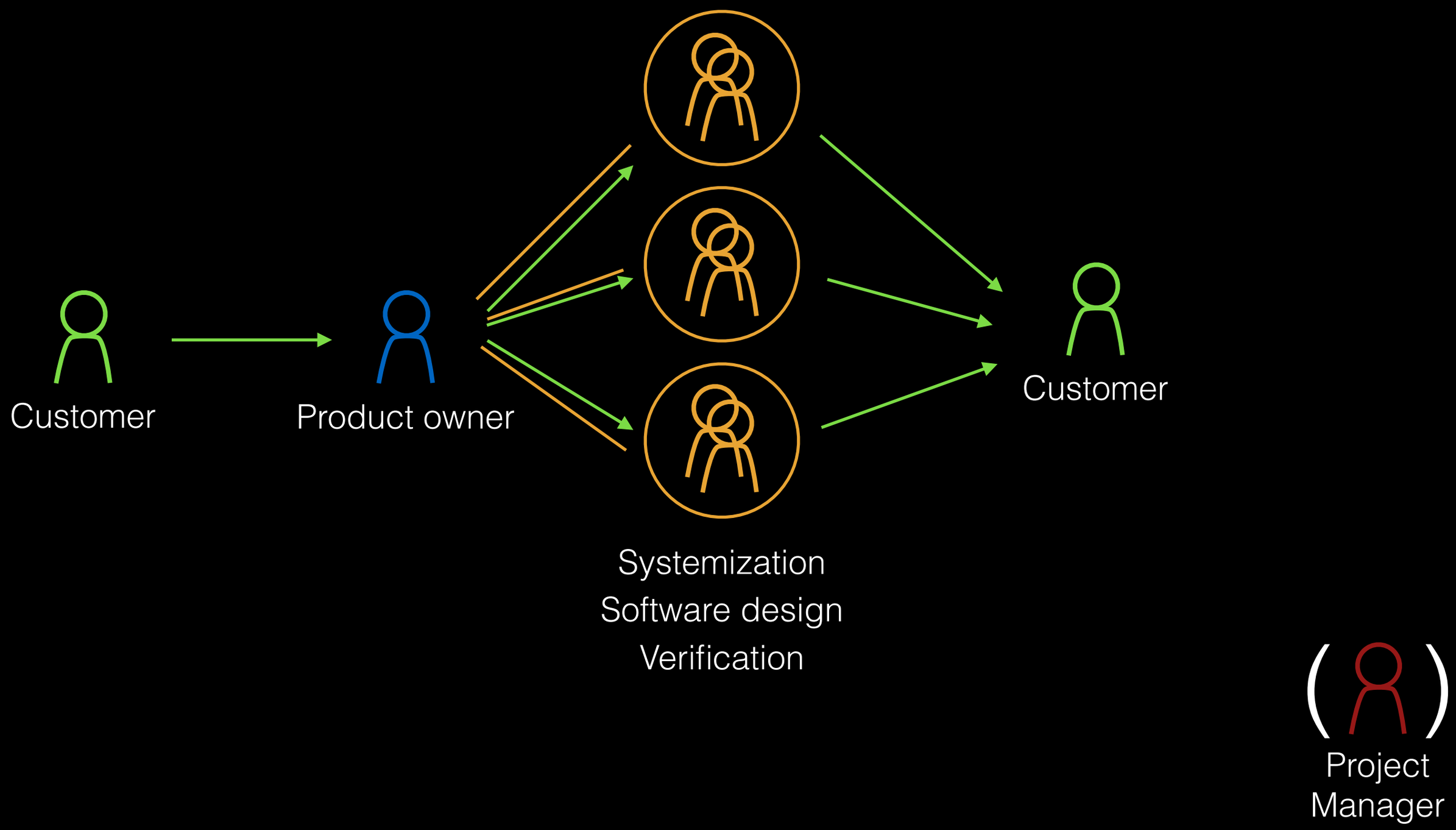

Scrum

- Lightweight project planning techniques
- Deliver as much quality software as possible within a series of Sprints
- Short daily meetings with every person on the software team and stakeholders

Three pillars of Scrum

1. Transparency

    - Visibility for those responsible for the outcome and common view of definition of “Done”

2. Inspection

    - Frequent inspection of progress toward the Sprint Goal

3. Adaptation

    - If anything deviates from expected outcome and will result in an unacceptable product, it must be adjusted. The Scrum process describes four formal points for inspect and adapt.

SCRUM

Customer,
Stakeholders

Product owner

Product
Backlog

Sprint
Planning

Sprint
Backlog

Team

Scrum Master

Sprint
1-4 weeks

Daily
Scrum

Sprint
Review

Increment

Retro-
spective

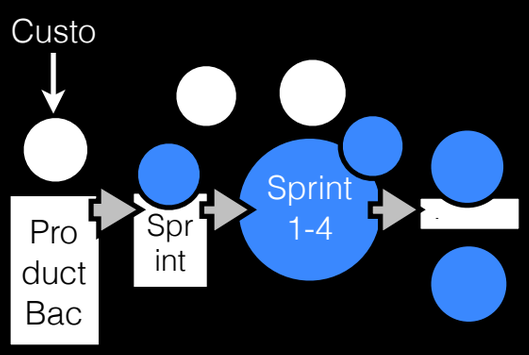

A *n* days Sprint

Day 1

Sprint Planning
8h / 4w

Day 2

Daily Scrum
15 min

Day 3

Daily Scrum
15 min

...

Day n

Sprint Review
4h / 4w

Sprint
Retrospective
3h / 4w

Getting started with Scrum

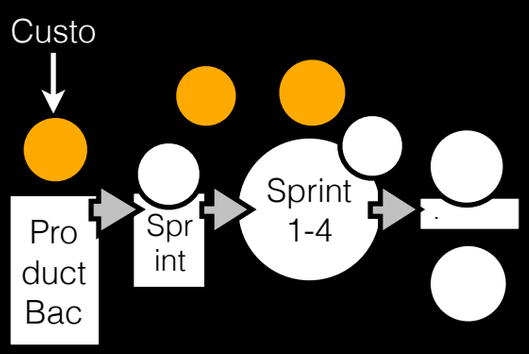

Scrum Team

The Scrum team is self-organizing and cross-functional.

- Self-organizing teams choose how to best complete their work rather than being directed from the outside.
- Cross-functional teams have all competences needed to complete their work without having to depend on others not part of the team.

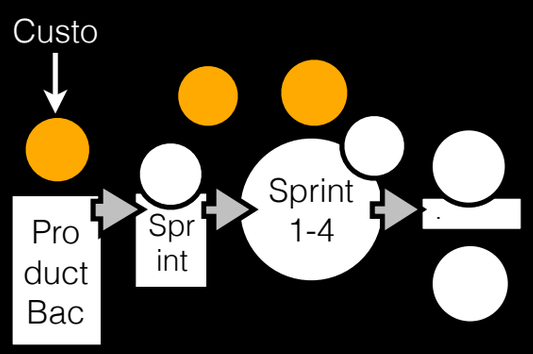

Scrum Team

- The Product Owner
    - Responsible for maximizing the value of what the team produces. In practice that means prioritizing the Product Backlog and is the only person that can change the priority.
- The Development Team
    - Self-organizing and cross-functional team of 6+-3 Developers.
- The Scrum Master
    - Supports the Development Team in the Scrum process, supports the Product Owner with the Product Backlog and facilitates Scrum Events. Removes impediments for the team.

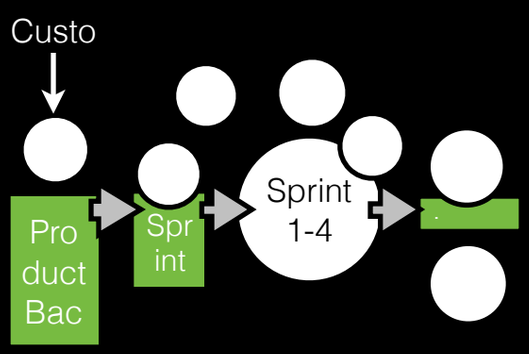

Scrum Artifacts

- Product Backlog
    - The product's (and project's) todo list. Includes features, improvements, wishes etc.
- Sprint Backlog
    - The Development Team's backlog for a single Sprint. During the Sprint Planning meeting the team estimates how many items from the Product Backlog that the team will complete, and adds those items to the Sprint Backlog.
- Increment
    - The finished items at the end of a Sprint are all included in the Increment (i.e. delivery). The Increment must be of good quality and may be sent to customers.

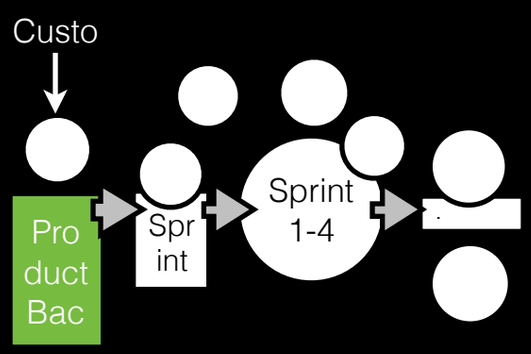

Product Backlog

- A Product Backlog is prioritized in "Customer value" order, with the most prioritized/highest value item on the top
- Well defined items on the Backlog are called User Stories and are formulated on the format "As ... I need ... in order to ...". They are estimated in Story Points
- A User Story should not be larger than that a Development Team can complete 2-4 per Sprint
- Further down in the Backlog items may be large and/or fuzzy. Large items are called Epics

Set up your Backlog

Set up a backlog with enough User Stories (well defined with definition of Done) to kick-off the first sprint, plus User Stories and Epics to cover the whole project scope

1. Brainstorm the complete product and create all Epics

2. Break down the most valuable/important Epics to User Stories, hopefully you will have User Stories that cover a few Sprints

3. Estimate the User Stories you have defined and assign "Story Points"

Estimate User Stories

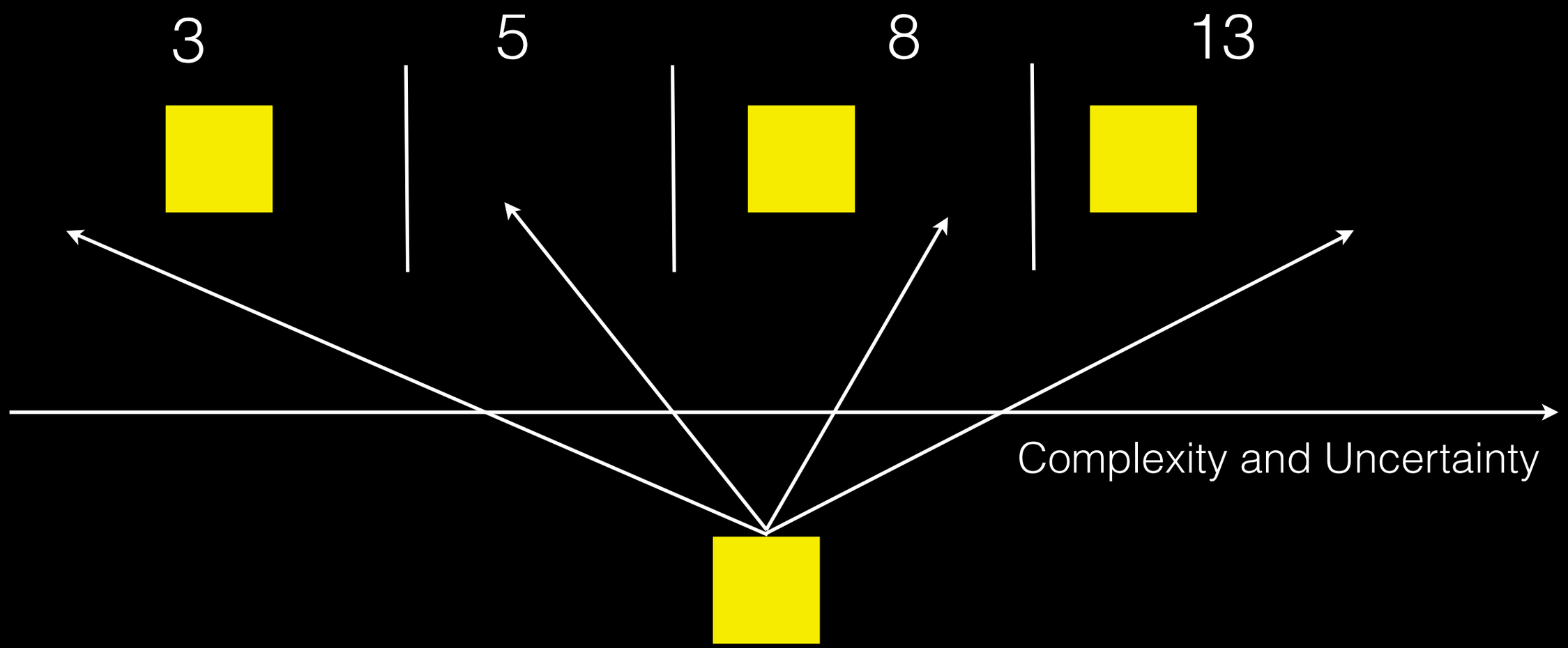

Burndown Chart

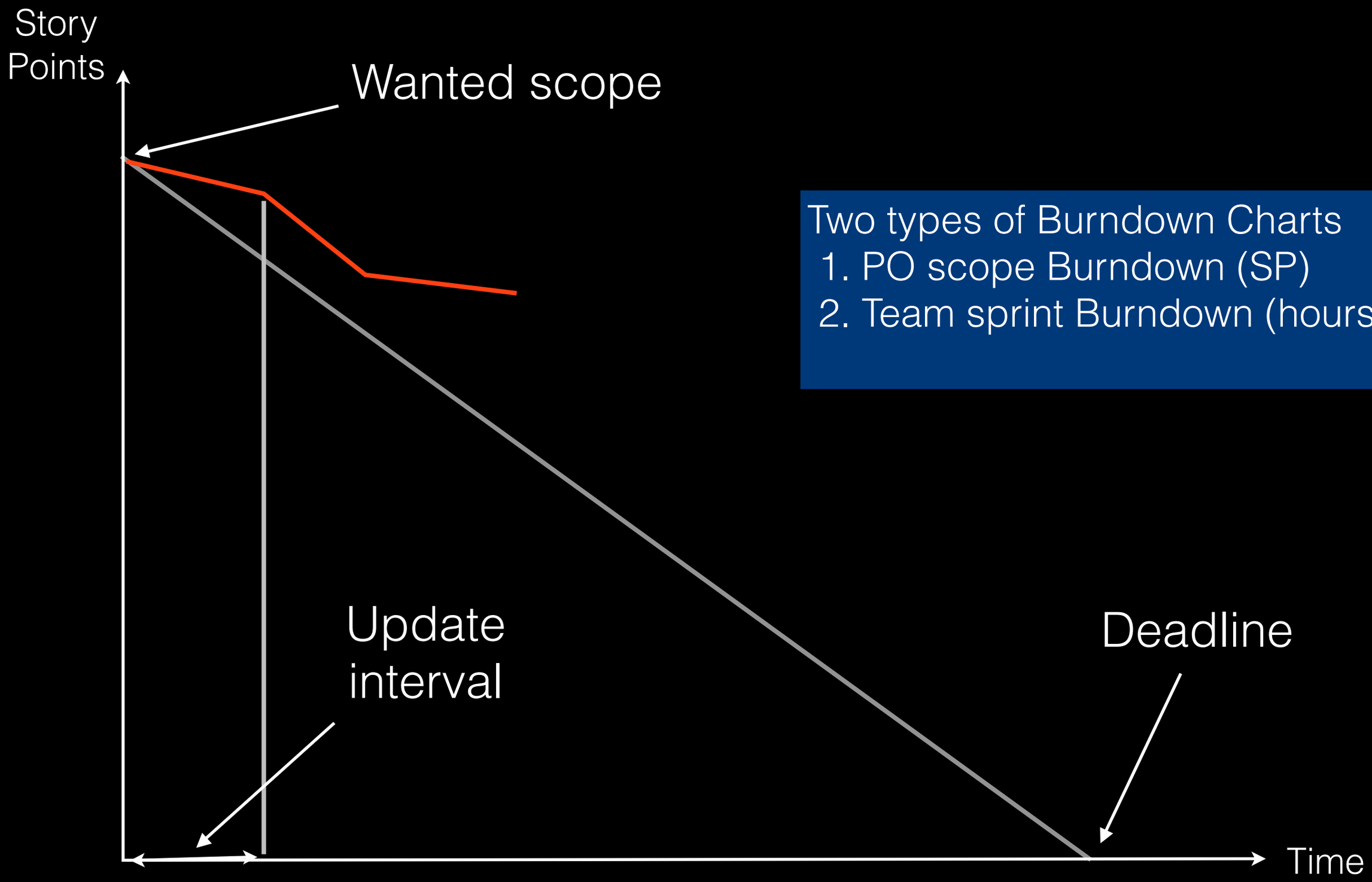

Two types of Burndown Charts
1. PO scope Burndown (SP)
2. Team sprint Burndown (hours)

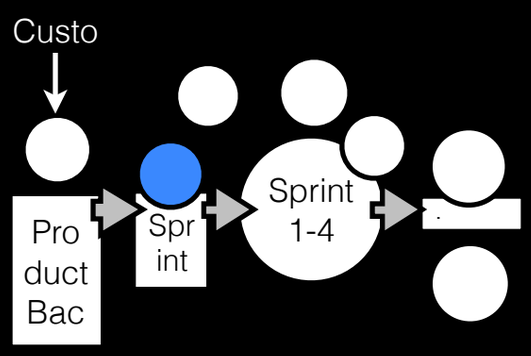

Sprint Planning

Plan for a 2 hour Sprint Planning meeting for a 1 week Sprint.
Product Owner brings the top prioritized User Stories.

- Part 1: What can be done during the Sprint?
  - Take User Stories from the Product Backlog and add to the Sprint Backlog. Definition of Done important. Decide on a Sprint Goal.
- Part 2: How will the work be done?
  - Break down all User Stories in the Sprint Backlog to Tasks

Keep User Stories and Tasks on Sticky notes

Sprint Planning

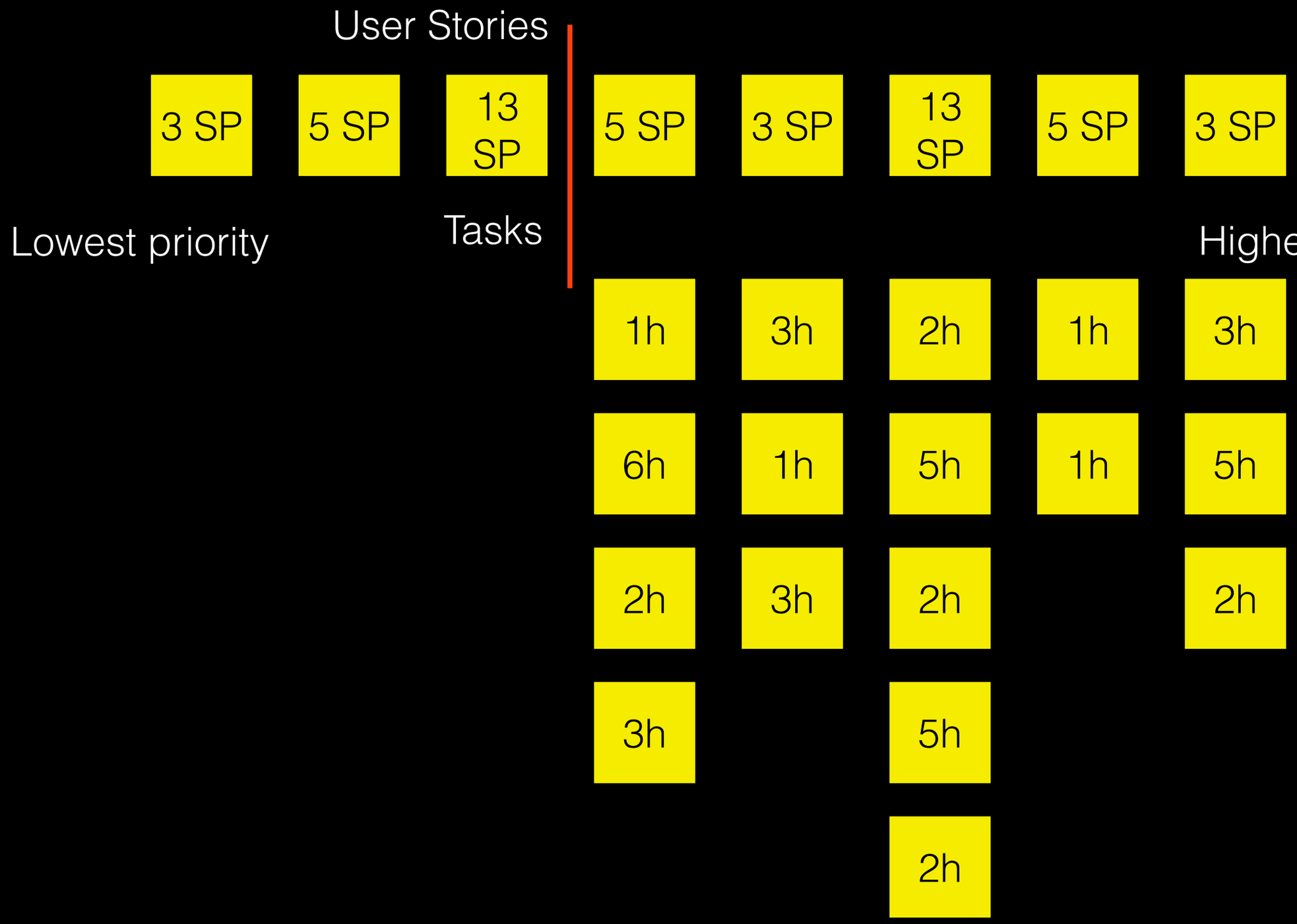

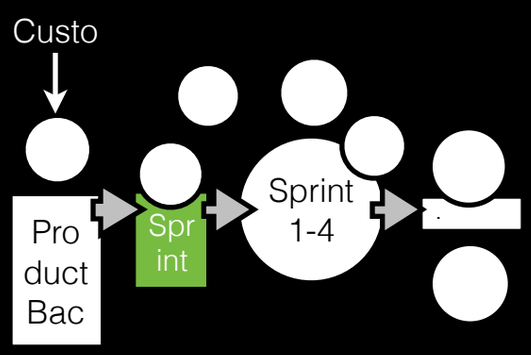

Sprint Backlog

- A Sprint Backlog is a prioritized backlog used by the team for the duration of a single Sprint
- It typically holds a few User Stories that are broken down into Tasks
- Tasks are estimated in "work hours", usually in the range of 1-16 hours per task
- The Sprint's progress is followed up by counting how many hours are left of the total in a "Burndown Chart"

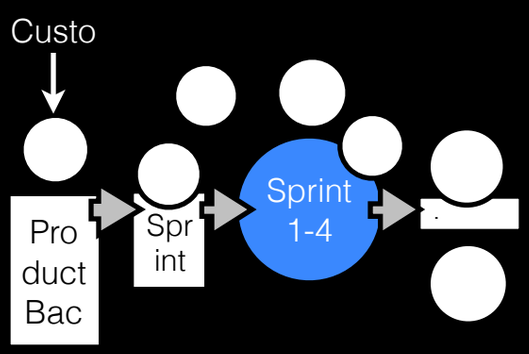

Start your Sprint

- Add the Sprint Backlog and Tasks to your "Scrum Board"
- The Scrum Master plans for and invites to to Daily Scrum, Sprint Review and Sprint Retrospective meetings
- Daily Scrum meeting updates the Scrum Board

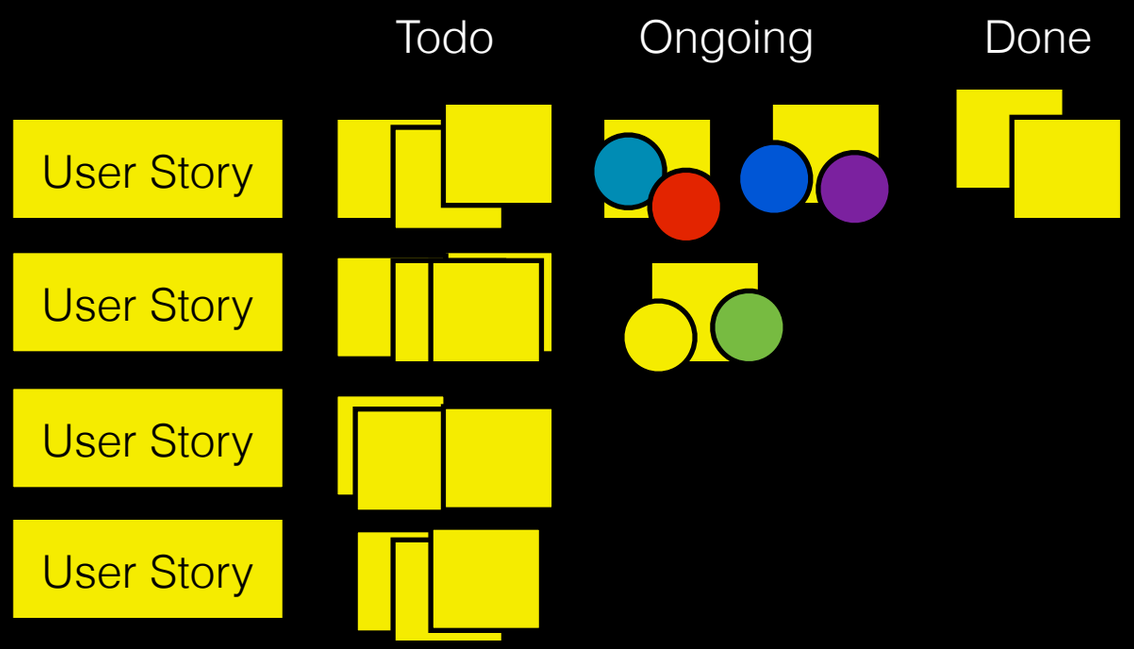

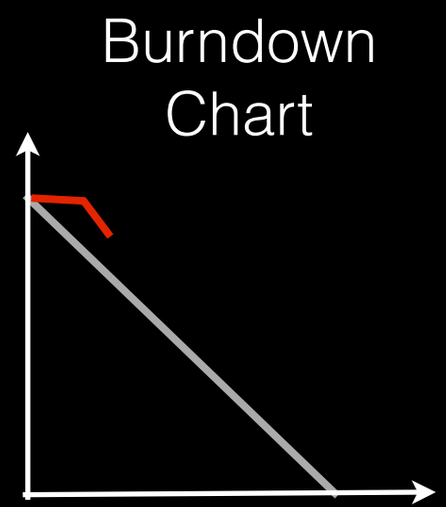

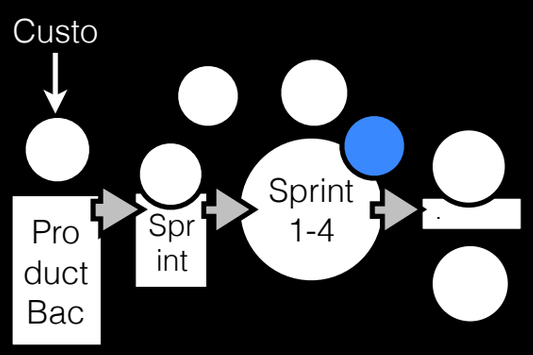

Daily Scrum

- Stand up meeting, maximum 15 minutes
- Three questions
  - What did I do yesterday that helped the Development Team reach the Sprint Goal?
  - What will I do today to help the Development Team reach the Sprint Goal?
  - Do I see any impediments that prevents me or the Development Team to reach the Sprint Goal?

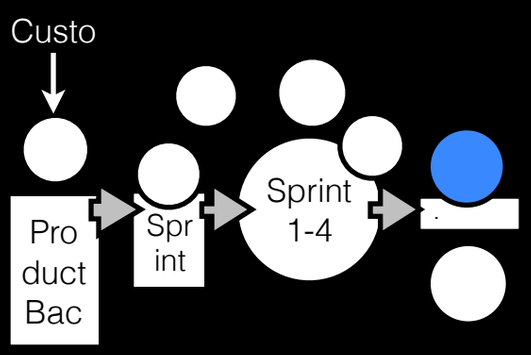

Sprint Review

- Product owner explains what has been Done and not done
- The Development Team demonstrates the work that is Done and answers questions about the Increment
- Product Owner describes the Product Backlog as it stands and shows current estimates for completion dates
- Discussion about what should be done in the coming Sprints (to provide input to the next Planning meeting)

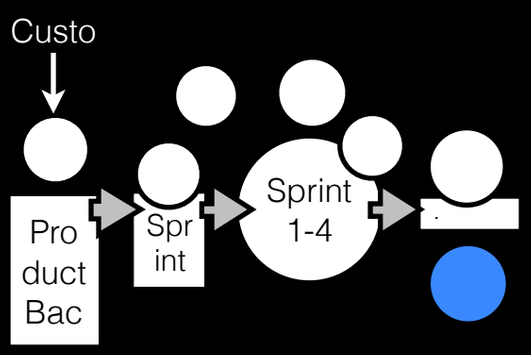

Retrospective

- Inspect the Sprint and create plans for improvements
- Method

1. Set the stage
2. Gather data
3. Generate insight
4. Decide what to do
5. Close

Retrospective

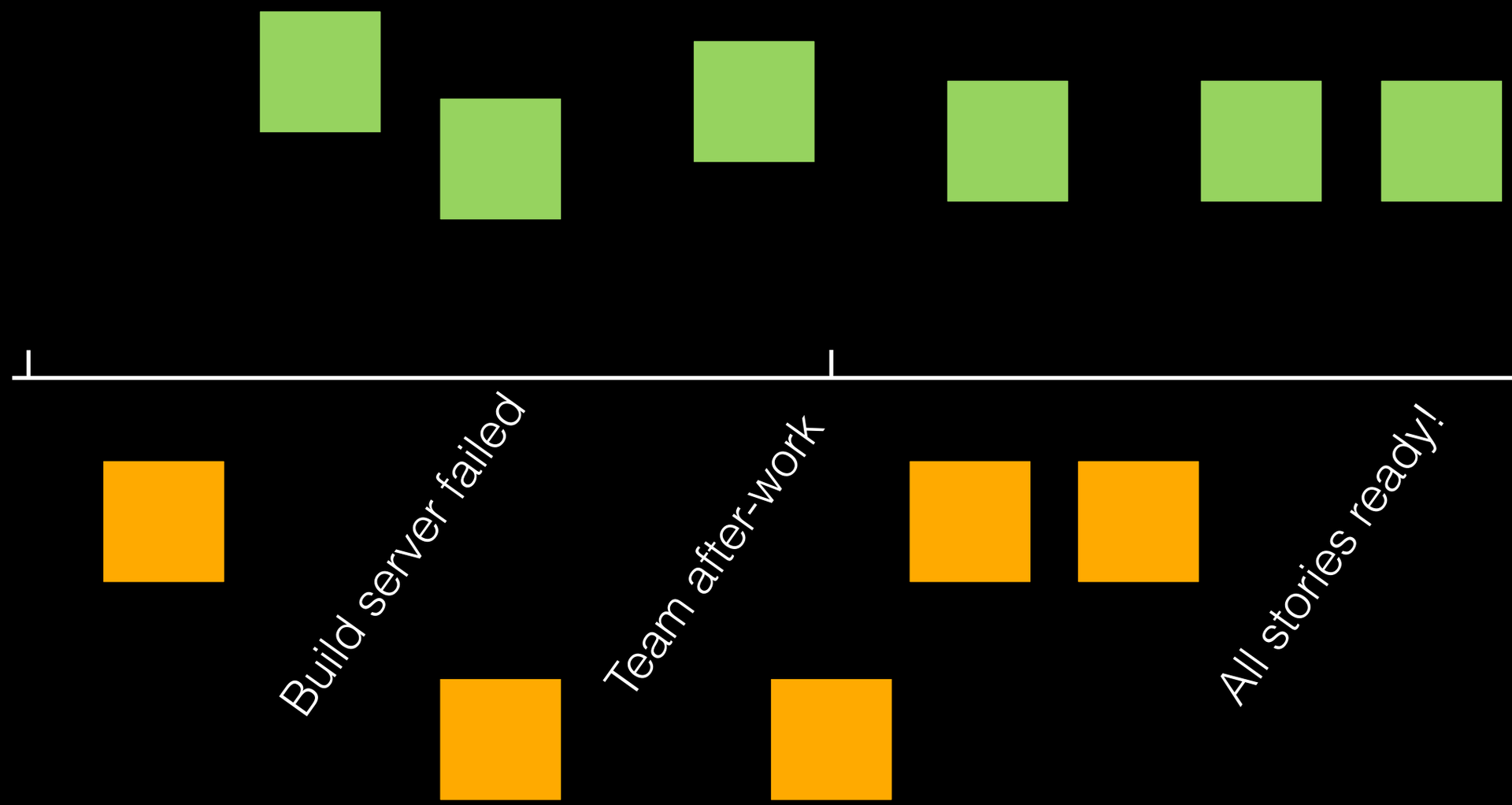

Retrospective

WoW

Build server

Team cooperation

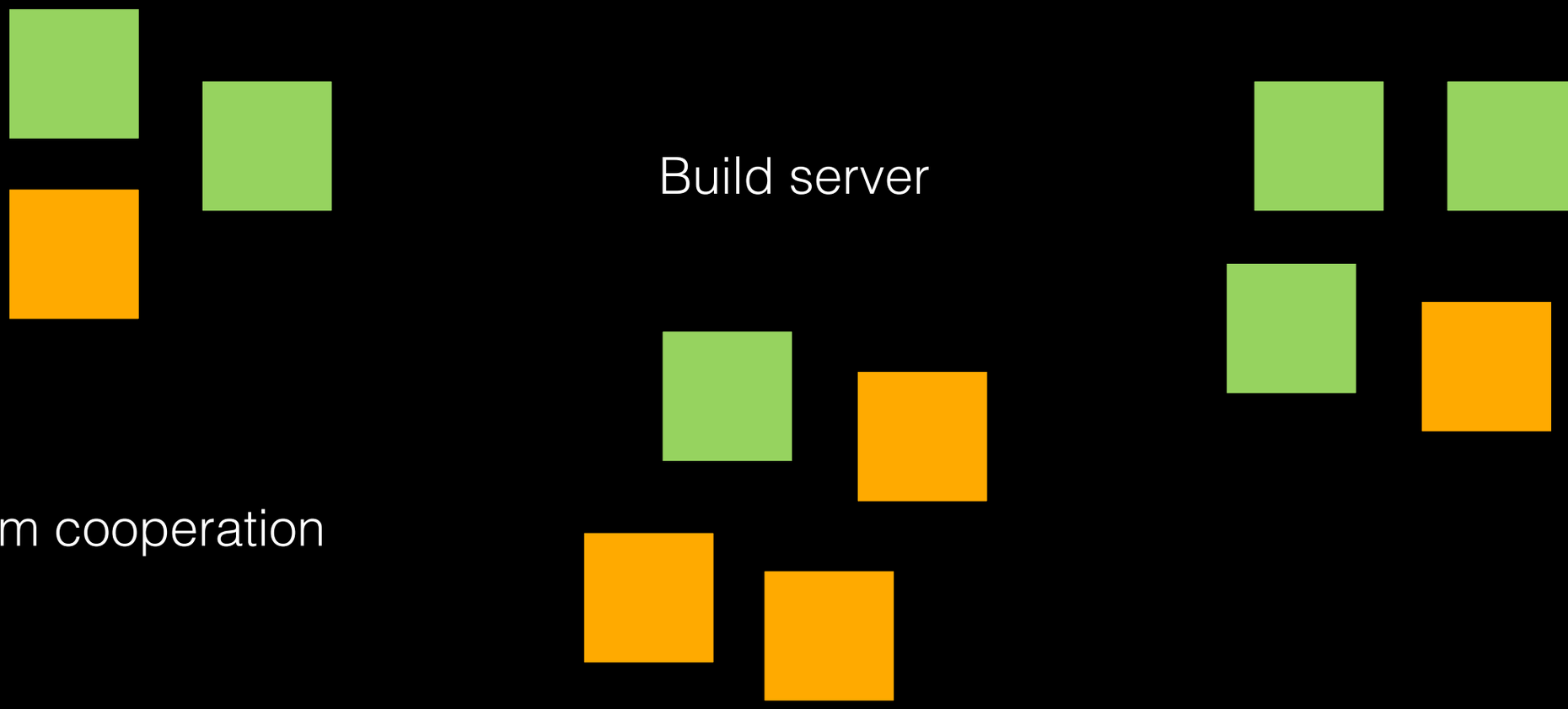

One action: Visualize Minimize Fix

Velocity

- How many Story Points did the Development Complete during last sprint?
- Velocity = SP / Sprint
- Input to the Sprint planning meeting part 1
  - “How many User Stories will we complete during the coming Sprint?”

The Scrum Guide

- http://www.scrum.org