Optimization of hybrid renewable power forecasting model for microgrid applications

Ting-Chia Ou
Dept. of Program on Smart and Sustainable Manufacturing
National Cheng Kung University
Tainan, Taiwan
outc@gs.ncku.edu.tw

Yu-Tung Chen
Dept. of Program on Smart and Sustainable Manufacturing
National Cheng Kung University
Tainan, Taiwan
jess1357992@gmail.com

Yi-Wei Jhang
Dept. of Program on Smart and Sustainable Manufacturing
National Cheng Kung University
Tainan, Taiwan
wiwi880705@gmail.com

2025 IEEE Industry Applications Society Annual Meeting (IAS) | 978-1-6654-5776-7/25/$31.00 ©2025 IEEE | DOI: 10.1109/IAS62731.2025.11061564

***Abstract*—To address the intermittency of renewable energy and the complexities associated with dispatching in microgrids, this study proposes a hybrid forecasting framework that integrates machine learning, deep learning, and swarm intelligence algorithms to enhance prediction accuracy. For solar power forecasting, a model that combines Convolutional Neural Networks (CNN), Bidirectional Long Short-Term Memory (BiLSTM), and Attention Mechanisms is utilized to extract both spatial and temporal features. In the case of wind power forecasting, a Least Squares Support Vector Machine (LSSVM) optimized through Bee Swarm Optimization (BSO) is employed. The dataset comprises hourly meteorological and power generation data from the Datan region in Taiwan. Following feature selection and data imputation, seasonal classification and K-means clustering are applied to assess model performance across varying data structures. The results indicate that the proposed solar model reduces the Mean Absolute Error (MAE) by 4.01%, 1.23%, and 1.12% compared to Long Short-Term Memory (LSTM), BiLSTM, and the CNN + BiLSTM models, respectively. The BSO-optimized LSSVM outperforms the Autoregressive Integrated Moving Average with Exogenous Variables (ARIMAX), Random Forest (RF), Support Vector Regression (SVR), and non-optimized LSSVM by 44.75%, 16.53%, 5.34%, and 1.76%, respectively. Overall, the framework significantly enhances forecasting accuracy as measured by MAE, Root Mean Square Error (RMSE), and Mean Relative Error (MRE), thereby improving energy management and dispatching in smart microgrids.**

Keywords—Microgrid, Renewable Energy Forecasting, Solar Power Prediction, Wind Power Prediction, Convolutional Neural Network (CNN), Bidirectional Long Short-Term Memory (BiLSTM), Least Squares Support Vector Machine (LSSVM), Bee Swarm Optimization (BSO)

I. Introduction

A. Research Background

With the intensification of climate change and the global push toward carbon neutrality, nations are diversifying their energy portfolios. Microgrids, as essential components of distributed energy systems, play a crucial role in the development of smart grids due to their flexible integration, autonomous operation, and dispatchability[1]. The International Energy Agency (IEA) reports a continuous increase in the penetration of renewable energy sources, such as solar and wind. Consequently, accurate real-time forecasting is vital for microgrid operations, particularly in both grid-connected and islanded modes[2].

Solar and wind energy systems are extensively utilized in microgrids due to their clean and modular characteristics. However, their inherent intermittency and unpredictable output present challenges to grid stability and storage management [3]. Consequently, accurate forecasting is essential for optimizing dispatch and energy storage strategies in smart microgrids [4].

Traditional statistical models, such as Autoregressive Integrated Moving Average (ARIMA), are limited in capturing the nonlinear dynamics of renewable energy data [5]. In contrast, machine learning and deep learning methods—including Support Vector Machines (SVM), Long Short-Term Memory (LSTM), Bidirectional LSTM (BiLSTM), and Convolutional Neural Networks (CNN)—offer superior fitting and pattern recognition capabilities [6][7]. LSTM excels in modeling long-term dependencies, making it effective for photovoltaic forecasting[8]. SVM and its variant, Least Squares SVM (LSSVM), perform well on small- to medium-sized datasets and are often enhanced using swarm intelligence algorithms such as Bee Swarm Optimization (BSO) for parameter tuning and improved accuracy [9][10] Recent studies emphasize intelligent integration and control. Ou et al. proposed an AI-based to optimize the power forecasting and coordinated dispatch in virtual power plants and microgrids [11] [12]. Tieng and Ou et al. developed the I4.2-GiM framework, integrating green manufacturing with for hybrid renewable energy for net-zero goals[13]. These works highlight the value of hybrid forecasting in microgrids applications. In line with these trends, a hybrid framework that integrates temporal feature extraction, data classification, and model optimization is expected to enhance forecasting accuracy and improve system stability in real-world scenarios.

B. Research Motivation and Purpose

Renewable energy sources demonstrate significant intermittency and seasonality. Their output is heavily influenced by meteorological conditions and regional characteristics, leading to highly variable and challenging-to-predict generation patterns. For microgrids, accurate forecasting of renewable energy generation is essential for informed decision-making, including energy storage scheduling, backup unit dispatching, and load balancing. This, in turn, enhances overall power quality and operational efficiency[1].

However, current forecasting models face several limitations: (1) a single model often struggles to simultaneously accommodate diverse data patterns, such as seasonal variations and climatic differences; (2) hyperparameter settings are typically determined by human expertise, which can lead to

Authorized licensed use limited to: National Cheng Kung Univ.. Downloaded on April 01,2026 at 07:10:33 UTC from IEEE Xplore. Restrictions apply.

overfitting or unstable performance; and (3) there is a trade-off between prediction accuracy and model interpretability, which restricts practical deployment [4][6].

To address these issues, this study proposes a hybrid renewable energy forecasting model for microgrid applications that integrates data classification techniques, deep learning, and swarm intelligence algorithms. The specific research objectives are as follows:

1) To develop a hybrid solar forecasting model combining CNN, BiLSTM, and attention (CNN + BiLSTM + Attention) to improve spatial–temporal feature extraction and prediction accuracy;

2) To apply LSSVM for wind forecasting, with hyperparameter optimization via BSO to enhance stability and generalization;

3) To investigate data classification methods, including seasonal segmentation and K-means clustering, for constructing sub-models tailored to different data types, improving model adaptability and predictive performance.

Through the proposed model architecture, this study aims to improve the accuracy of renewable energy forecasting and facilitate the intelligent and automated development of future energy management systems in microgrids.

C. Research Methods & Process

This study begins with data collection, focusing on meteorological and generation records relevant to both solar and wind power. The raw data undergoes preprocessing, which includes imputing missing values and selecting features to improve data quality. Subsequently, the data is categorized using two approaches: seasonal classification and K-means clustering, to identify underlying patterns across various temporal and feature dimensions. Based on the classification results, a solar power forecasting model is developed utilizing a CNN + BiLSTM + Attention. In contrast, a wind power forecasting model is constructed using LSSVM, with hyperparameters optimized through the BSO. Finally, the forecasting results are evaluated using performance metrics, and conclusions are drawn to provide insights for future energy prediction applications.

II. Data Source and Preprocessing

A. Data Introduction

This study utilizes hourly meteorological and power generation data collected by the Taiwan Power Company (TPC) from the Datan region during the years 2023 to 2024. The PV dataset includes outputs from both ground-mounted and rooftop systems at the Datan Power Plant, with installed capacities of 651.42 kW and 710.04 kW, respectively. The wind power dataset is sourced from the Datan Wind Farm, which has a total installed capacity of 15,100 kW. All data were recorded on an hourly basis, facilitating a detailed analysis of power generation patterns under varying climatic conditions.

Each dataset includes synchronized meteorological variables, e.g., pressure, temperature, humidity, wind speed/direction, precipitation, sunshine duration, global horizontal irradiance (GHI), ultraviolet (UV) index, and cloud cover—serving as model input features. The high temporal resolution and completeness of the dataset make it well-suited for forecasting model development.

B. Data Preprocessing

Preprocessing steps included the imputation of missing values, feature selection, and the incorporation of lagged generation values to enhance model performance and data reliability[14].

1) Missing Value Imputation

As the data was obtained from real-world measurements, occasional missing values occurred due to equipment failures or environmental disturbances. These gaps were addressed using interpolation methods. Specifically, the employed strategy was as follows: if a previous valid value existed, it was used to fill the gap; if not, the next valid value was applied. In cases where neither value was available, the average value from adjacent time slots was utilized. This approach preserves temporal continuity and trend characteristics, ensuring that the forecasting models remain stable despite the presence of missing data.

2) Feature Selection

Feature selection was performed using a combination of p-values and Pearson correlation coefficients to identify the features most relevant to power output. Additionally, a heatmap was utilized to visualize correlations.

The p-value is a statistical measure used to assess the significance of a hypothesis test [15][16]. A small p-value (typically < 0.05) suggests a statistically significant relationship between the feature and the target variable. To ensure robustness, two methods were used to calculate the p-values:

- The first involved using the function code `scipy.stats.pearsonr (x, y) ` to compute the Pearson correlation coefficient and then convert it to a t-statistic to derive the two-tailed p-value using a t-distribution with n−2 degrees of freedom.
- The second analysis involved ordinary least squares (OLS) regression to test the significance of the regression slope.

The Pearson correlation coefficient (r) measures linear correlation between variables (−1 to +1). Values of 0.1–0.3, 0.3–0.5, and > 0.5 indicate weak, moderate, and strong correlation, respectively. It is computed as shown in (1).

$$r = \frac{\sum(x_i - \overline{x})(y_i - \overline{y})}{\sqrt{\sum(x_i - \overline{x})^2 \cdot \sum(y_i - \overline{y})^2}} \tag{1}$$

Features with high p-values or weak correlation were excluded from the model input. For instance, in the PV dataset, all features exhibited highly significant p-values, with GHI, UV index, and sunshine duration showing the strongest positive correlations, as shown in TABLE I. . Conversely, precipitation had a correlation coefficient of only −0.066 and was thus removed. In the wind dataset, features such as precipitation, UV index, GHI, and sunshine duration had p-values > 0.05, indicating weak correlation with wind generation and were therefore excluded. Visibility, with a correlation of only 0.066, was also removed, as shown in TABLE II.

Authorized licensed use limited to: National Cheng Kung Univ.. Downloaded on April 01,2026 at 07:10:33 UTC from IEEE Xplore. Restrictions apply.

TABLE I. P-VALUES AND CORRELATION COEFFICIENTS FOR PHOTOVOLTAIC POWER GENERATION (TOP RELEVANT FEATURES ONLY)

Feature	Statistical Metrics		
	Correlation	*Original P-Value*	*Stats model P-Value*
Global Solar Radiation (MJ/m²)	0.926521	<1e-308	<1e-308
Ultraviolet Index	0.876039	<1e-308	<1e-308
Sunshine Duration (h)	0.79314	<1e-308	<1e-308
Temperature (°C)	0.384498	1.26E-306	1.26E-306
Direction (360-degree)	0.247762	1.14E-122	1.14E-122
Maximum Instantaneous Wind Direction (360-degree)	0.23451	9.69E-110	9.69E-110

TABLE II. P-VALUES AND CORRELATION COEFFICIENTS FOR WIND POWER GENERATION (TOP RELEVANT FEATURES ONLY)

Feature	Statistical Metrics		
	Correlation	*Original P-Value*	*Stats model P-Value*
Maximum Instantaneous Wind Speed (m/s)	0.887486	<1e-308	<1e-308
Wind Speed (m/s)	0.877827	<1e-308	<1e-308
Station Pressure (hPa)	0.248884	8.41E-124	8.41E-124
Sea Level Pressure (hPa)	0.248513	1.99E-123	1.99E-123
Precipitation Duration (h)	0.126038	2.36E-32	2.36E-32

A heatmap was used to visualize feature relationships, as shown in Fig. 1. For PV forecasting, GHI (r = 0.93), UV index (r = 0.88), and sunshine duration (r = 0.79) were the most strongly correlated features. These variables are key indicators of solar irradiance, with GHI showing the highest correlation and selected as the basis for K-means classification.

For wind forecasting, wind speed (r = 0.88) and maximum instantaneous wind speed (r = 0.89) were identified as the most critical features. These metrics reflect average and peak wind conditions, both essential for turbine performance and used for K-means classification. This selection enhances model accuracy and supports operational insights for PV and wind energy systems.

C. Data Classification

Renewable energy sources like solar and wind exhibit seasonal variability. For example, longer daylight and higher irradiance in summer favor photovoltaic (PV) generation, while stronger winter winds benefit wind power. Seasonal classification enables more accurate forecasting across the year, enhancing grid and storage system planning [3].

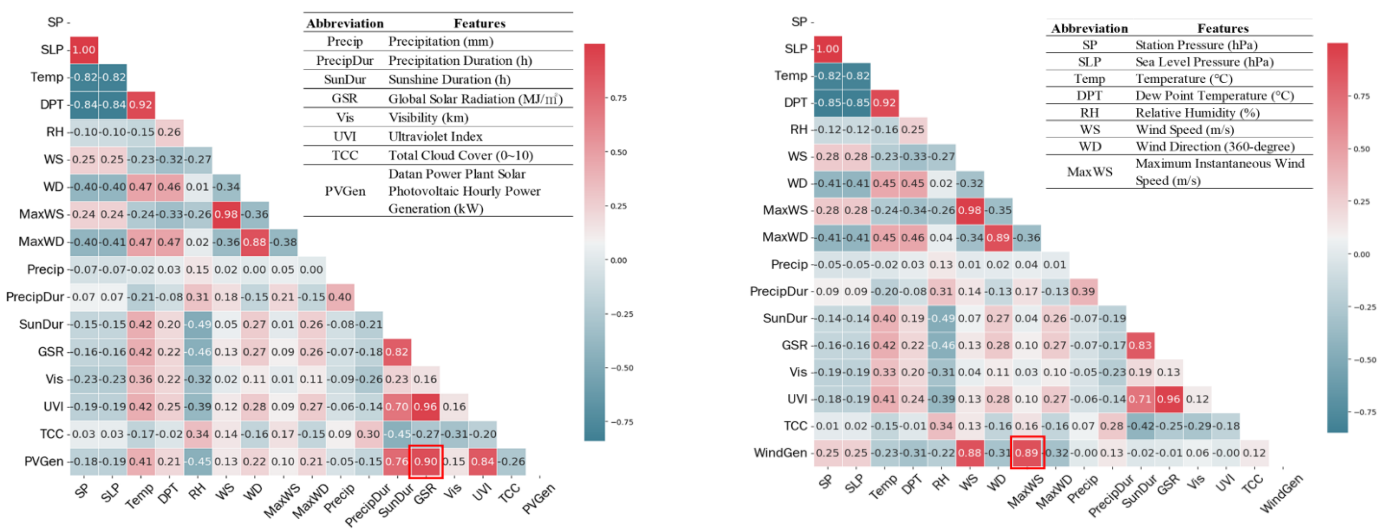

(a) Heatmap of photovoltaic power generation features

(b) Heatmap of wind power generation features

Fig. 1. Heatmaps of photovoltaic and wind power datasets

K-means clustering, an unsupervised algorithm, groups large-scale datasets—such as hourly generation and meteorological variables—by similarity. Miraftabzadeh et al. [17] validated its effectiveness in energy data management, while Wu et al.[18] applied weather classification and K-means in a Taiwan-based solar forecasting case, clustering irradiance into low, medium, and high levels.

This classification reduces data complexity, minimizing computational load and training time. For tasks like energy demand forecasting or storage planning, representative days from each cluster streamline simulation. In this study, both seasonal classification and K-means clustering are applied to assess their impact on forecasting accuracy under a unified model architecture.

III. SOLAR POWER FORECASTING USING A CNN + BILSTM + ATTENTION MODEL

A. Explanation of the BiLSTM Architecture

LSTM is a recurrent neural network designed to capture long-term dependencies[19] via memory cells and three gates—forget, input, and output. These mechanisms filter noise and retain relevant information, making LSTM effective for tasks like language modeling [20] and financial forecasting [21]. In renewable energy, accurate predictions support microgrid

Authorized licensed use limited to: National Cheng Kung Univ.. Downloaded on April 01,2026 at 07:10:33 UTC from IEEE Xplore. Restrictions apply.

operations by optimizing storage and dispatch. For instance, a 9 kW PV forecasting experiment in Brazil validated its practical value[8], while Rangelov et al. combined Random Forest, deep neural networks, and LSTM for PV forecasting using weather data [22].

BiLSTM extends LSTM with a backward layer, enabling it to consider both past and future contexts. This reduces prediction errors by 37.78% on the same datasets [6] and enhances short-term power forecasting when combined with CNN [23]. As shown in Fig. 3, BiLSTM training involves a forward pass to compute bidirectional hidden states, a backward pass to propagate errors and accumulate gradients, and a weight update phase that adjusts all gates synchronously.

As shown in (2), the hidden state at time step t, denoted as h_t, is defined as the sum of the forward and backward hidden states.

$$h_t = \overrightarrow{h_t} + \overleftarrow{h_t} \tag{2}$$

Where $\overrightarrow{h_t}$ is the forward-propagated hidden state and $\overleftarrow{h_t}$ is the backward-propagated hidden state.

As shown in (2), the final output Y_t is computed by applying a linear transformation to h_t, defined as.

$$Y_t = Vh_t + b_y \tag{3}$$

where V is the weight matrix, and b_y is the bias vector in the output layer.

The bidirectional structure of BiLSTM allows it to utilize both past and future information at each time step, enhancing its capability to model complex temporal patterns. This is particularly beneficial for renewable energy forecasting, as shown in Fig. 2.

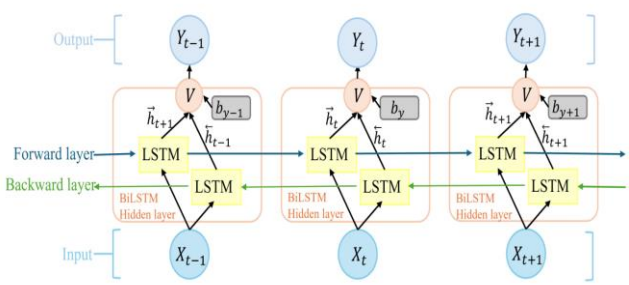

Fig. 2. Architecture of a BiLSTM model for sequence learning.

B. Purpose of the Hybrid Model

Hybrid models combine multiple learning techniques to leverage their complementary strengths in capturing spatial and temporal features, thus improving forecasting accuracy. A typical PV forecasting setup uses CNN for spatial feature extraction, followed by LSTM for temporal modeling [4]. Zang et al. [7] applied a CNN–LSTM model for irradiance forecasting in Texas, while Mubarak et al. [24] proposed a CNN–BiLSTM model with autoregressive elements for day-ahead electricity price prediction.

In renewable energy time series tasks, CNN applies 1D or 2D convolutions over historical data (e.g., wind speed, irradiance) to capture local patterns. Pooling layers reduce dimensionality and noise, and the output is fed into fully connected layers for regression [25]. This study adopts two 1D convolutional layers.

C. BiLSTM Model Explanation

BiLSTM enhances traditional LSTM by adding a backward layer that processes inputs in reverse, allowing the model to capture both past and future context at each time step. This bidirectional structure improves the modeling of temporal dependencies. Siami-Namini et al.[6] showed that BiLSTM reduced prediction error by 37.78% compared to LSTM. Amirkhanloo et al. [23] further demonstrated the effectiveness of CNN–BiLSTM in short-term power consumption forecasting.

D. Structure of the Attention Mechanism

The attention mechanism allows models to assign dynamic weights to time steps or features based on their relevance to the current context. By computing a weighted sum of hidden states, it avoids the limitations of fixed-size vectors, enhances long-term dependency modeling, and reduces noise. This improves convergence and forecasting accuracy in volatile time-series tasks such as renewable energy prediction[26].

The attention mechanism used in this study consists of three main steps. First, for each step t, the feature vector $x_t \in R^d$ undergoes a linear transformation followed by a tanh activation to produce a score tensor $e \in R^{T\times d}$. This process is represented by (4)

$$e_{t,f} = \tanh\left((x_t W)_f + b_f\right) \tag{4}$$

where W is the trainable weight matrix in the attention layer, and b_f is the bias vector added across the feature dimensions, representing a learnable constant for each feature.

Subsequently, as shown in (5), a softmax function is applied along the temporal axis t to convert the activation scores at each time step into attention weights $\alpha_{t,f}$. For each feature dimension f, the sum of attention weights over all time steps $t' \in \{1,2,\dots,T\}$ is equal to 1, thereby enabling the model to emphasize the most critical temporal positions for each feature.

$$\alpha_{t,f} = \frac{\exp\left(e_{t,f}\right)}{\sum_{t'=1}^{T} \exp\left(e_{t',f}\right)} \tag{5}$$

Finally, the original input is element-wise multiplied by the corresponding attention weights, and then summed across the time dimension to produce the final context vector, as shown in (6).

$$c_f = \sum_{t=1}^{T} \alpha_{t,f} x_{t,f} \tag{6}$$

E. Proposed Solar Power Forecasting Model

Based on preliminary results, we propose a solar power forecasting model using a CNN–BiLSTM–Attention architecture. This design facilitates intelligent energy storage and dispatch control within future microgrid applications. Simulation results are presented in Section V.

Authorized licensed use limited to: National Cheng Kung Univ.. Downloaded on April 01,2026 at 07:10:33 UTC from IEEE Xplore. Restrictions apply.

As shown in Fig. 3, CNN first extracts spatial features and reduces dimensionality through convolution and pooling. BiLSTM then captures bidirectional temporal dependencies, producing contextualized hidden states. The attention mechanism assigns weights to each time step, generating a context vector that emphasizes the most relevant information for final prediction.

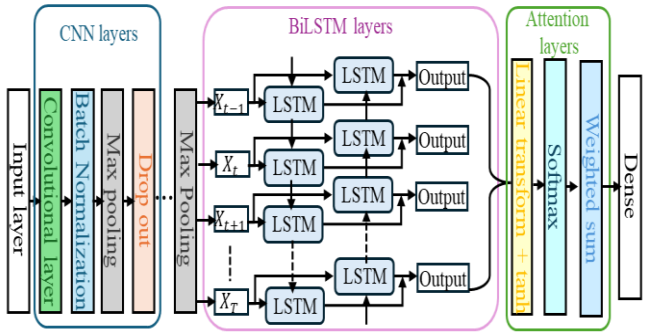

Fig. 3. Architecture of the CNN + BiLSTM + Attention model for solar power forecasting

IV. Wind Power Forecasting Model

A. Selection of Forecasting Models

This study employs four representative models for wind power forecasting: Autoregressive Integrated Moving Average with Exogenous Variables (ARIMAX), Random Forest (RF), Support Vector Regression (SVR), and Least Squares Support Vector Machine (LSSVM) [27].

ARIMAX extends ARIMA by incorporating exogenous variables for improved short-term forecasting [28]. RF uses decision tree ensembles, offering nonlinear fitting and robustness to high-dimensional data [29]. SVR applies structural risk minimization for effective nonlinear regression [30].

Focus is placed on LSSVM, a simplified SVR variant [31][32], which reformulates the regression problem into linear equations to enhance computational efficiency and numerical stability [33]. The kernel function used is shown in Fig. 4.

The predictive function of LSSVM is defined as

$$f(x) = \sum_{i=1}^{N} \alpha_i K(x, x_i) + b \tag{7}$$

where x is the input feature vector, x_i are training samples, $K(x, x_i)$ is the kernel function, α_i are learned weights, and b is the bias term.

Experimental results show that LSSVM outperforms other models in accuracy, stability, and efficiency, making it the primary forecasting method in this study [34]. As detailed in Section V, its strong generalization and computational efficiency benefit both SVR and the least squares formulation.

B. Hyperparameter Optimization of LSSVM Using BSO

To improve wind power forecasting accuracy, this study employs BSO to optimize LSSVM hyperparameters. Proposed by Akbari et al.[35] , BSO is a population-based stochastic algorithm that mimics bee foraging behavior. It achieves global optimization through the coordinated actions of scout bees, experienced foragers, and onlooker bees [36][37].

In the BSO algorithm, experienced forager bees update their positions by integrating both cognitive (personal) and social (global) components. The position update is defined by (8)[35]:

$$x_{\text{new}}^{(i)} = x_{\text{old}}^{(i)} + \omega_b r_b \left(b^{(i)} - x_{\text{old}}^{(i)}\right) + \omega_e r_e \left(e - x_{\text{old}}^{(i)}\right) \tag{8}$$

In this formulation, $x_{\text{old}}^{(i)}$ and $x_{\text{new}}^{(i)}$ represent the previous and updated positions of the i-th bee. The term $b^{(i)}$ is the personal best found by bee i, and e is the global best of the swarm. Coefficients r_b and r_e are uniformly distributed in [0,1], introducing stochasticity. Learning weights ω_b and ω_e, which govern personal and social influences, are dynamically adjusted during optimization to balance exploration and convergence, as defined in (9), (10).

$$\omega_b = \omega_{b,\max} - \left(\frac{\omega_{b,\max} - \omega_{b,\min}}{\text{Iter}_{\max}}\right) \cdot \text{Iter} \tag{9}$$

$$\omega_e = \omega_{e,\min} + \left(\frac{\omega_{e,\max} - \omega_{e,\min}}{\text{Iter}_{\max}}\right) \cdot \text{Iter} \tag{10}$$

Where $\omega_{b,\max}$, $\omega_{b,\min}$, $\omega_{e,\max}$ and $\omega_{e,\min}$ represent the upper and lower bounds of the respective weights, $\text{Iter}_{\max}$ is the total number of iterations, and Iter is the current iteration index.

This study applies Bee Swarm Optimization (BSO) to efficiently search the LSSVM hyperparameter space, enhancing generalization and forecasting accuracy [38]. By iteratively updating positions and evaluating fitness based on LSSVM prediction error, the swarm converges toward optimal solutions. BSO ultimately identifies the best values for the regularization parameter C and kernel parameter as illustrated in Fig. 4.

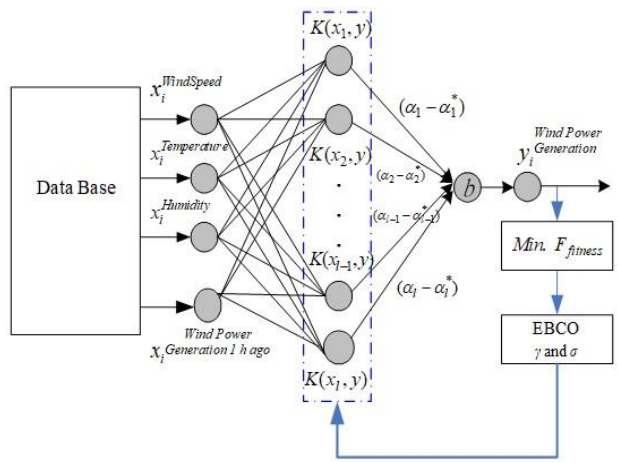

Fig. 4. Structure of the LSSVM model with BSO-based hyperparameter optimization.

C. Model Implementation Workflow

The implementation workflow of the proposed wind power forecasting model consists of six primary stages, covering data preprocessing, model training, parameter optimization, and performance evaluation. The complete process is illustrated in Fig. 5.

Authorized licensed use limited to: National Cheng Kung Univ.. Downloaded on April 01,2026 at 07:10:33 UTC from IEEE Xplore. Restrictions apply.

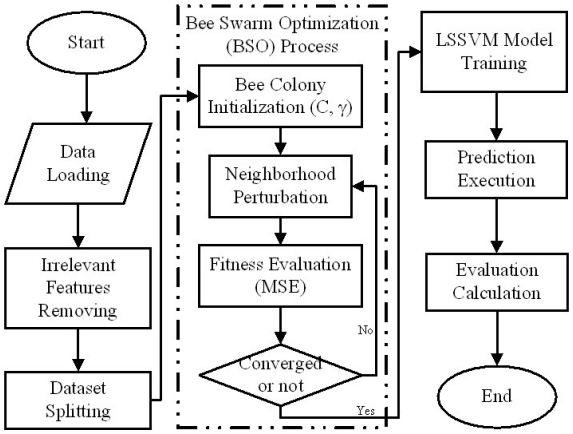

Fig. 5. Workflow of the LSSVM model training integrated with BSO-based hyperparameter optimization.

V. Results and Evaluation

A. Evaluation Metrics

To evaluate the accuracy and stability of the proposed forecasting models, this study adopts three widely used error metrics: Mean Absolute Error (MAE), Root Mean Square Error (RMSE), and Mean Relative Error (MRE). These indicators are commonly applied in renewable energy forecasting, including solar and wind power prediction, and effectively capture different aspects of prediction error, offering both interpretability and practical relevance [38][39].

1) Mean Absolute Error (MAE)

As shown in (11), MAE measures the average magnitude of absolute differences between the predicted and actual values, serving as an indicator of the overall prediction error:

$$\mathrm{MAE} = \frac{1}{n}\sum_{i=1}^{n}|y_i - \hat{y}_i| \tag{11}$$

Where y_i is the actual value, $\hat{y}_i$ is the predicted value, and $n$is the total number of samples.

MAE treats all prediction errors equally, provides good interpretability, and is relatively robust to outliers. It is particularly suitable for stable forecasting tasks, such as short-term solar irradiance prediction [38].

2) Root Mean Square Error (RMSE)

As shown in (12), RMSE is calculated by taking the square root of the average squared differences between actual and predicted values. It penalizes larger prediction errors more heavily:

$$\mathrm{RMSE} = \sqrt{\frac{1}{n}\sum_{i=1}^{n}(y_i - \hat{y}_i)^2} \tag{12}$$

RMSE is sensitive to large deviations, making it suitable for capturing abrupt power fluctuations in wind energy forecasting [39]. It is commonly used alongside MAE to assess both overall accuracy and the impact of outliers.

3) Mean Relative Error (MRE)

As shown in (13), MRE evaluates the average relative error between predicted and actual values, providing a unitless metric:

$$\mathrm{MRE} = \frac{1}{n}\sum_{i=1}^{n}\left(\frac{y_i - \hat{y}_i}{y_i}\right) \tag{13}$$

MRE is widely used in wind speed and power forecasting to enhance model generalization, with lower values indicating better alignment between predictions and observations. Similar to MAPE, it remains stable when actual values are non-zero [39][40].

By incorporating all three metrics, the error characteristics and practical applicability of the forecasting models can be assessed from multiple perspectives, thereby enhancing the overall reliability of the research findings.

B. Solar Power Forecasting Results

TABLE III. presents the performance comparison of different models applied to solar power forecasting. Overall, the BiLSTM model, which incorporates backwards memory flow, outperforms the standard LSTM model. When CNN is added prior to BiLSTM, the model benefits from superior spatial feature extraction, yielding better results than feeding sequences directly into BiLSTM. This observation is consistent with the findings of Zang et al. [7]. With the integration of the attention mechanism, CNN + BiLSTM + Attention model achieves the best performance, demonstrating the lowest MAE and MRE values. Therefore, this hybrid model is selected as the primary architecture for incorporating clustered input data.

TABLE III. Performance Comparison of Solar Power Forecasting Models

Model	Performance		
	MAE	***RMSE***	***MRE***
LSTM	0.0922	0.1603	0.6715
BiLSTM	0.0896	0.1550	0.6624
CNN + BiLSTM	0.0895	0.1531	0.6364
CNN + Bi-LSTM + Attention	0.0885	0.1559	0.6241

C. Wind Power Forecasting Results

To identify the most suitable base model for wind power forecasting, this study first compares several forecasting algorithms, including ARIMA, RF, SVR, and LSSVM.

TABLE IV. summarizes the forecasting performance of each model evaluated on the same testing dataset. The results indicate that the LSSVM model outperforms ARIMAX, RF, and SVR in terms of prediction accuracy.

TABLE IV. Performance Comparison of Wind Power Forecasting Models

Model	Performance		
	MAE	***RMSE***	***MRE***
ARIMAX	0.706	0.901	0.230
RF	0.467	0.751	0.146
SVR	0.412	0.680	0.129
LSSVM	0.397	0.681	0.124
LSSVM+BSO	0.390	0.670	0.123

To determine the most suitable base model for wind power forecasting, this study compares ARIMAX, RF, SVR, and LSSVM using a consistent testing dataset. As shown in TABLE IV. , LSSVM outperforms the others in prediction accuracy. To

Authorized licensed use limited to: National Cheng Kung Univ.. Downloaded on April 01,2026 at 07:10:33 UTC from IEEE Xplore. Restrictions apply.

further enhance performance, BSO is applied for hyperparameter tuning, forming the LSSVM + BSO hybrid model. This optimized model achieves the best results across all metrics, with MAE reduced to 0.390, RMSE to 0.670, and MRE to 0.123. These findings confirm that LSSVM is the most effective base model, and BSO significantly boosts its forecasting accuracy and robustness.

D. Impact of Data Classification on Forecasting Performance

This study evaluates the effects of seasonal classification and K-means clustering on the forecasting performance of solar and wind models, aiming to enhance data homogeneity and prediction accuracy. For solar forecasting, seasonal segmentation improves model performance across all seasons, with winter yielding the lowest MAE, as shown in Fig. 6, indicating strong seasonality in solar irradiance. In contrast, Fig. 7 shows that only the summer wind data achieves improved MAE (0.29), while other seasons show limited or adverse effects due to higher variability in wind patterns.

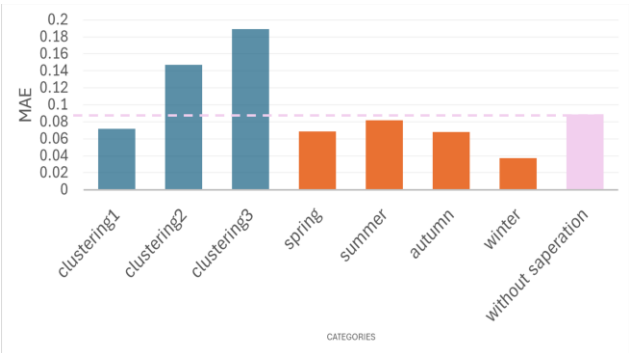

Fig. 6. Impact of seasonal and K-means classification on solar power forecasting accuracy

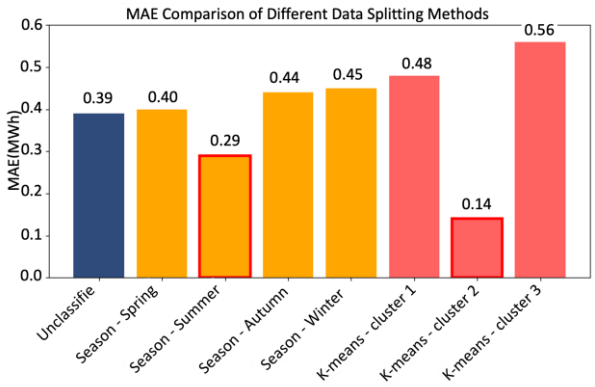

Fig. 7. Impact of seasonal and K-means classification on wind power forecasting accuracy

K-means clustering results, as illustrated in Fig. 6 and Fig. 8 indicate that solar forecasting achieves optimal performance in low-radiation Cluster 1, with an MAE of approximately 0.065. In contrast, for wind forecasting, Fig. 7 and Fig. 9 demonstrate that Cluster 2, characterized by moderate-to-low wind speeds, yields the lowest MAE of 0.14. These findings suggest that K-means clustering enhances forecasting accuracy under stable meteorological conditions; however, its performance may decline as data heterogeneity increases.

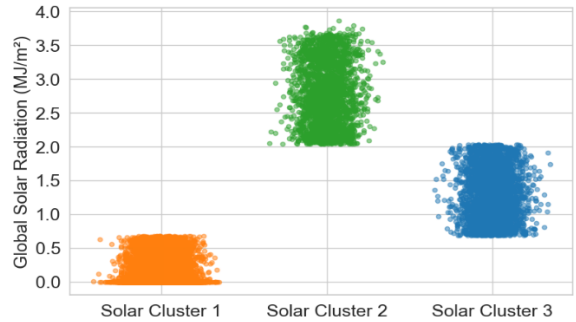

Fig. 8. Solar Feature Distribution by K-means clusters

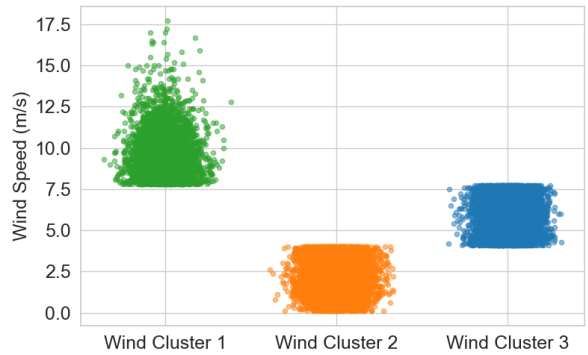

Fig. 9. Wind Feature Distribution by K-means clusters

Overall, seasonal classification is effective for solar forecasting due to the distinct patterns of irradiance that vary by season. In contrast, K-means clustering offers advantages under conditions of meteorological stability. However, the suitability of each classification method depends on the characteristics of the energy type and the variability of weather patterns. Future research should focus on integrating data density analysis and intra-cluster variance to enhance the robustness and generalizability of the models.

VI. Conclusion and Future Work

This study addresses the forecasting uncertainty of renewable energy in microgrids by proposing a hybrid architecture that integrates deep learning and machine learning with swarm intelligence for hyperparameter tuning. For solar energy forecasting, the CNN + BiLSTM + Attention model effectively captures spatial-temporal features and achieves superior accuracy. In the case of wind forecasting, the BSO-optimized LSSVM outperforms traditional models, including ARIMAX, RF, and SVR. Seasonal segmentation enhances solar prediction, while K-means clustering demonstrates limited benefits for wind data. Overall, the framework improves forecasting precision and stability, thereby supporting efficient smart microgrid operations. Future research may explore dual-mode forecasting tailored to low- and high-power regions, adopt more robust evaluation metrics, and optimize model generalization and cross-domain performance to advance intelligent microgrid energy management.

Acknowledgments

This work was supported by the National Science and Technology Council of Taiwan under Contracts NSTC 113-2221-E-006-198 and NSTC 113-2627-M-024-001.

Authorized licensed use limited to: National Cheng Kung Univ.. Downloaded on April 01,2026 at 07:10:33 UTC from IEEE Xplore. Restrictions apply.

The authors would like to express their gratitude to the Datan Power Plant of Taiwan Power Company (TPC) for providing comprehensive and high-quality meteorological and generation datasets used for model training and validation.

REFERENCES

[1] W. Cabrera, D. Benhaddou and C. Ordonez, "Solar Power Prediction for Smart Community Microgrid," *IEEE Int. Conf. on Smart Computing (SMARTCOMP)*, 2016.

[2] International Energy Agency, "Renewables 2023," IEA, 2023.

[3] H. Jiang et al., "Analysis and modeling of seasonal characteristics of renewable energy generation," *Renewable Energy*, vol. 219, p. 119414, 2023.

[4] J. Jailani et al., "Investigating the Power of LSTM-Based Models in Solar Energy Forecasting," *Processes*, vol. 11, 2023.

[5] A. Mellit and A. Pavan, "A 24-h forecast of solar irradiance using artificial neural network: application for performance prediction of a grid-connected PV plant," *Energy Conversion and Management*, vol. 51, no. 4, pp. 771–782, 2010.

[6] S. Siami-Namini et al., "The Performance of LSTM and BiLSTM in Forecasting Time Series," *IEEE Big Data*, 2019.

[7] H. Zang et al., "Short-term global horizontal irradiance forecasting based on a hybrid CNN-LSTM model," *Renewable Energy*, vol. 160, pp. 26–41, 2020.

[8] D. Dhaked et al., "Power output forecasting of solar photovoltaic plant using LSTM," *Green Energy and Intelligent Transportation*, vol. 2, no. 5, 2023.

[9] J. A. K. Suykens and J. Vandewalle, "Least squares support vector machine classifiers," *Neural Processing Letters*, vol. 9, no. 3, pp. 293–300, 1999.

[10] H. Li, X. Yu and S. Wang, "Parameter optimization of least squares support vector machine based on improved bee swarm optimization," *Applied Soft Computing*, vol. 89, 2020.

[11] T.-C. Ou*, H. Tieng, T.-H. Tsai, Y.-Y. Li, M.-H. Hung, and F.-T. Cheng, "Design of green power clouds for intelligent virtual power plants," *IEEE Trans. Autom. Sci. Eng.*, early access, Jun. 2024, doi: 10.1109/TASE.2024.3406412.

[12] T.-C. Ou, and C. M. Hong*, "Dynamic operation and control of microgrid hybridpower systems," *Energy*, vol. 66, no. 1, pp. 314-323, March 2014

[13] H. Tieng, T.-C. Ou, T.-H. Tsai, Y.-Y. Li, M.-H. Hung, and F.-T. Cheng, "I4.2-GiM: A novel green intelligent manufacturing framework for net zero," *IEEE Trans. Autom. Sci. Eng.*, early access, Dec. 2023, doi: 10.1109/TASE.2023.3340149.

[14] J. J. Berman, "Understanding Your Data," in Data Simplification, J. J. Berman, Ed. Morgan Kaufmann, 2016, pp. 135–187.

[15] Durand, D.; Aguilar, J.; R-Moreno, M.D. An Analysis of the Energy Consumption Forecasting Problem in Smart Buildings Using LSTM. Sustainability 2022, 14, 13358. H

[16] I. Jebli, F.-Z. Belouadha, M. I. Kabbaj, and A. Tilioua, "Prediction of Solar Energy Guided by Pearson Correlation Using Machine Learning," Energy, vol. 224, Art. no. 120109, 2021.

[17] S. M. Miraftabzadeh et al., "K-Means and Alternative Clustering Methods in Modern Power Systems," *IEEE Access*, vol. 11, 2023.

[18] Y. -K. Wu, Q. -T. Phan and Y. -J. Zhong, "Overview of Day-Ahead Solar Power Forecasts Based on Weather Classifications and a Case Study in Taiwan," in IEEE Transactions on Industry Applications, vol. 60, no. 1, pp. 1409-1423, Jan.-Feb. 2024, doi: 10.1109/TIA.2023.3327035.

[19] S R. C. Staudemeyer and E. R. Morris, "Understanding LSTM: A tutorial into long short-term memory recurrent neural networks," *arXiv preprint* arXiv:1909.09586, 2019. [Online]. Available: https://arxiv.org/abs/1909.09586.

[20] S. Merity, N. S. Keskar, and R. Socher, "Regularizing and optimizing LSTM language models," *arXiv preprint* arXiv:1708.02182, 2017. [Online]. Available: https://arxiv.org/abs/1708.02182.

[21] Adil Moghar, Mhamed Hamiche, Stock Market Prediction Using LSTM Recurrent Neural Network, Procedia Computer Science, Volume 170, 2020, Pages 1168-1173, ISSN 1877-0509,

[22] D. Rangelov, M. Boerger, N. Tcholtchev, P. Lämmel and M. Hauswirth, "Design and Development of a Short-Term Photovoltaic Power Output Forecasting Method Based on Random Forest, Deep Neural Network and LSTM Using Readily Available Weather Features," in IEEE Access, vol. 11, pp. 41578-41595, 2023, doi: 10.1109/ACCESS.2023.3270714.

[23] D. Amirkhanloo, H. Chitsaz and A. Mohajerzadeh, "Hybrid Deep Learning (CNN-BiLSTM-LSTM) Model for Prediction of Short Power Consumption," 2024 8th International Conference on Smart Cities, Internet of Things and Applications (SCIoT), Mashhad, Iran, Islamic Republic of, 2024, pp. 162-167

[24] H. Mubarak, A. Abdellatif, S. Ahmad, M. Z. Islam, S. M. Muyeen, M. A. Mannan, and I. Kamwa, "Day-Ahead electricity price forecasting using a CNN-BiLSTM model in conjunction with autoregressive modeling and hyperparameter optimization," Int. J. Electr. Power Energy Syst., vol. 161, Art. no. 110206, 2024.

[25] Wibawa, A.P., Utama, A.B.P., Elmunsyah, H. et al. Time-series analysis with smoothed Convolutional Neural Network. J Big Data 9, 44 (2022).

[26] Nicholas Majeske, Shreyas Sunil Vaidya, Ryan Roy, Abdul Rehman, Hamed Sohrabpoor, Tyson Miller, Wenhui Li, C.R. Fiddyment, Alexander Gumennik, Raj Acharya, Vikram Jadhao, Prateek Sharma, Ariful Azad, Industrial energy forecasting using dynamic attention neural networks, Energy and AI, Volume 20, 2025,

[27] E. Elattar, A. Ghoneim, and E. Abdel-Aal, "Efficient wind power prediction using machine learning methods: A comparative study," *Energies*, vol. 15, no. 7, p. 2327, 2022.

[28] S. Li and Y. Su, "Hybrid wind speed prediction based on a self-adaptive ARIMAX model and support vector regression," *Energies*, vol. 9, no. 1, p. 7, 2016.

[29] F. Hu, J. Wang, and T. Zhang, "A novel hybrid methodology for fault diagnosis of wind turbines using artificial intelligence techniques," *Energy Reports*, 2023.

[30] S. Rehman et al., "Application of support vector machine models for forecasting solar and wind energy resources: A review," *aurak.ac.ae*, 2022.

[31] Y. Wang, X. Liu, and H. Lin, "Comparison between wind power prediction models based on wavelet decomposition with least-squares support vector machine (LS-SVM) and artificial neural network (ANN)," *ResearchGate*, 2014.

[32] J. A. K. Suykens and J. Vandewalle, "Least squares support vector machine classifiers," *Neural Processing Letters*, vol. 9, no. 3, pp. 293–300, 1999.

[33] Y. Wang et al., "Traffic flow forecasting by a least squares support vector machine with a fruit fly optimization algorithm," *ResearchGate*, 2016.

[34] J. Mäkinen, "Machine learning based wind power forecasting," *University of Vaasa*, 2023.

[35] R. Akbari, A. Mohammadi, and K. Ziarati, "A novel bee swarm optimization algorithm for numerical function optimization," *Commun. Nonlinear Sci. Numer. Simul.*, vol. 15, no. 10, pp. 3142–3155, Oct. 2010.

[36] X. Wang and L. Tan, "A powerful bee swarm optimization algorithm," *ResearchGate*, 2012.

[37] A. Khanna et al., "Swarm intelligence algorithms for feature selection: A review," *Applied Sciences*, vol. 8, no. 9, p. 1521, 2018.

[38] Y. Chu, W. Su, and H. Yu, "Short-term solar irradiance forecasting using machine learning," *Renewable Energy*, vol. 145, pp. 911–921, 2020.

[39] M. A. Sotelo-Figueroa et al., "Application of the Bee Swarm Optimization BSO to the Knapsack Problem," in *Soft Computing for Recognition Based on Biometrics*, Springer, 2010, pp. 191–206.

[40] M. Mohandes, S. Rehman, and T. O. Halawani, "A neural networks approach for wind speed prediction," *Renewable Energy*, vol. 13, no. 3, pp. 345–354, 1998.

Authorized licensed use limited to: National Cheng Kung Univ.. Downloaded on April 01,2026 at 07:10:33 UTC from IEEE Xplore. Restrictions apply.