A 3.1 mW 8b 1.2 GS/s Single-Channel Asynchronous SAR ADC With Alternate Comparators for Enhanced Speed in 32 nm Digital SOI CMOS

Lukas Kull, *Student Member, IEEE*, Thomas Toifl, *Senior Member, IEEE*, Martin Schmatz, *Senior Member, IEEE*, Pier Andrea Francese, *Member, IEEE*, Christian Menolfi, *Member, IEEE*, Matthias Brändli, Marcel Kossel, *Senior Member, IEEE*, Thomas Morf, *Senior Member, IEEE*, Toke Meyer Andersen, *Student Member, IEEE*, and Yusuf Leblebici, *Fellow, IEEE*

***Abstract*—An 8b 1.2 GS/s single-channel Successive Approximation Register (SAR) ADC is implemented in 32 nm CMOS, achieving 39.3 dB SNDR and a Figure-of-Merit (FoM) of 34 fJ per conversion step. High-speed operation is achieved by converting each sample with two alternate comparators clocked asynchronously and a redundant capacitive DAC with constant common mode to improve the accuracy of the comparator. A low-power, clocked capacitive reference buffer is used, and fractional reference voltages are provided to reduce the number of unit capacitors in the capacitive DAC (CDAC). The ADC stacks the CDAC with the reference capacitor to reduce the area and enhance the settling speed. Background calibration of comparator offset is implemented. The ADC consumes 3.1 mW from a 1 V supply and occupies 0.0015 mm².**

***Index Terms*—ADC, alternate comparators, analog-to-digital converter, asynchronous, constant common mode, offset compensation, redundant, SAR, successive approximation.**

I. Introduction

NEXT-GENERATION digital high-speed links require fast, yet energy-efficient ADCs at minimum area. Forthcoming Ethernet standards require ADCs in the receiver to resolve higher signaling constellations and to allow for longer equalization in the digital domain. The upcoming 100 GS/s Ethernet standard IEEE 802.3bj plans to use four copper backplane channels at 25 GS/s and requires ADCs of 5–6 Effective Number of Bits (ENOB) at 25–30 GHz. The long-range standard OTU-4 for 100 GS/s requires even higher-rate ADCs of >50 GS/s. Moreover, lower-speed 10 GS/s Ethernet requires a resolution of 5–6 ENOB.

ADCs with more than 6b precision running at several GHz are almost impossible to build as a single-channel ADC. Therefore, generally a number of slower ADCs are interleaved to overcome the speed limitation of a single-channel ADC. Accordingly, ADCs capable of high-speed networking with a resolution of 6–8b are of high interest. A suitable sub-ADC should provide a high speed-per-area ratio to reduce the total area of a time-interleaved ADC and an optimized speed-per-power ratio to keep the overall power consumption low. Currently, SAR ADCs exhibit the best energy efficiency for medium-resolution applications [1].

SAR ADCs have been known for decades [2], [3], but interest in such topologies only increased in recent years. Technology scaling with lower supply voltages in digital CMOS processes favors ADC topologies with only few truly analog elements, making SAR ADCs perfectly suitable, as they require no gain stages. A number of improvements were achieved in the past few years. Set-and-Down SAR DAC switching [4] is more efficient for SAR conversion than the classical approach [5]: The input voltage is directly sampled onto the capacitive DAC on the top plates, where the comparator is connected. Therefore the first comparison of Set-and-Down is already performed without switching capacitors, saving time and energy.

Asynchronous clocking [4], [6]–[8] has often been used in recent designs to shorten the overall conversion time by removing waiting times during SAR operation. In addition, only one external clock pulse of nominally 12.5% duty cycle is required to define the sampling window and start the conversion, thus saving power in the clock distribution.

Converting more than one bit per cycle is another effective way of increasing the conversion speed. A number of designs with 2 b/cycle were presented [8]–[10] with much higher sampling rates than previous single-bit/cycle SAR ADCs. The disadvantages of multi-bit/cycle SAR ADCs with respect to the single-bit/cycle approach are the larger number of comparisons required, and the more complex DAC structure. In addition, multi-bit/cycle reduces the advantages of redundancy and asynchronous timing.

An efficient way to relax settling constraints of the capacitive DAC in a SAR ADC is a redundant switching sequence [11]–[13]. With a radix < 2, the comparator does not have to wait for complete DAC settling. The time saved by relaxing the DAC settling is generally much larger than the extra cycles needed to resolve all bits.

Our design implements most of the above-mentioned improvements [14], [15]. It takes advantage of asynchronous

Manuscript received April 18, 2013; revised August 07, 2013; accepted August 09, 2013. Date of publication September 24, 2013; date of current version November 20, 2013. This paper was approved by Guest Editor Brian Brandt.

L. Kull is with IBM Research – Zurich, Rüschlikon, Switzerland, and also with the Microelectronic Systems Laboratory, Swiss Federal Institue of Technology (EPFL), Lausanne, Switzerland (e-mail: lku@zurich.ibm.com).

T. Toifl, M. Schmatz, P. A. Francese, C. Menolfi, M. Brändli, M. Kossel, T. Morf, and T. M. Andersen are with IBM Research – Zurich, Rüschlikon, Switzerland.

Y. Leblebici is with the Microelectronic Systems Laboratory, Swiss Federal Institute of Technology (EPFL), Lausanne, Switzerland.

Color versions of one or more of the figures in this paper are available online at http://ieeexplore.ieee.org.

Digital Object Identifier 10.1109/JSSC.2013.2279571

0018-9200 © 2013 IEEE
Authorized licensed use limited to: Carleton University. Downloaded on March 20,2026 at 15:37:36 UTC from IEEE Xplore. Restrictions apply.

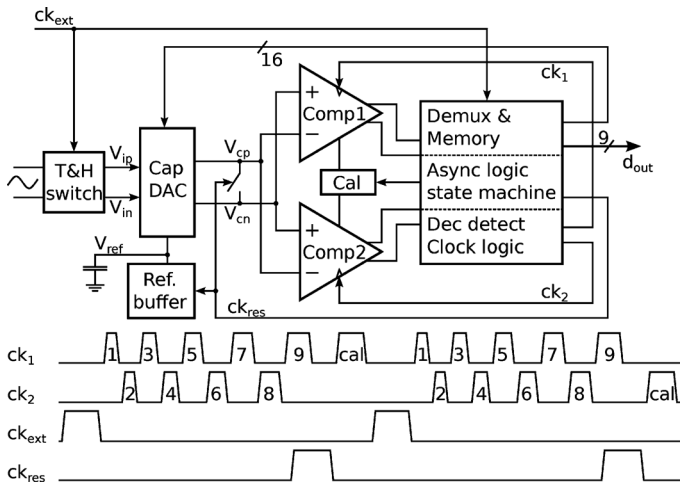

Fig. 1. Asynchronous SAR ADC overview with alternate comparators.

timing, redundancy, and the Set-and-Down principle. Multi-bit/cycle is not used to save power because of the fewer comparisons required. Moreover, the single-bit/cycle design requires less area for the DAC. In addition to the above-mentioned improvements, the ADC uses a constant common-mode version of the Set-and-Down principle, features a low-power reference voltage buffer, and increases speed by alternating two comparators.

This paper is organized as follows. Section II outlines the main principles used in the ADC with details on the alternate comparators and clocking sequence. Section III describes the main building blocks, before Section IV summarizes experimental results and Section V concludes our work.

II. ADC Architecture

A. Overview

The ADC is based on relatively simple building blocks shown in Fig. 1. The input signal is directly connected to the track-and-hold (T&H) switch. No boot-strapped switches are required to achieve 8b linearity. The T&H switch consists of an in-line switch with cross-coupled transistors to compensate for signal feed-through and half-sized dummy transistors to cancel charge injection. To retain flexibility on the common mode, the switch is designed with NMOS and PMOS devices in parallel.

The T&H is directly controlled by the external clock signal, $ck_{\rm ext}$. The switch is directly connected to the CDAC, which stores the differential input voltage. A target size of 128 fF on nodes $V_{\rm cp}$ and $V_{\rm cn}$ was chosen to achieve low-power CDAC switching, a high input-bandwidth and a reasonably large unit capacitance for good matching.

The comparators are directly connected to the CDAC without in-line switches, preventing slower settling of CDAC changes at the comparator due to in-line switch delays. For the same reason there is no preamplifier in front of the comparator. This puts a higher focus on the comparator design, as the comparator is key for achieving low noise and high decision speed at the same time.

The logic of a SAR ADC has to fulfill a number of functions. It has to store the output of the comparators, and based on their decision controls the capacitive DAC. To address the correct memory cell, the logic needs to know the current bit position of the conversion. Therefore the logic needs to count the number of decisions. An internal asynchronously clocked SAR ADC requires more logic for clock generation. A decision-detect block is required to know when the comparators have finished and operation can be continued. Based on a trigger of the decision-detect block, the subsequent clock edges for the comparator have to be generated, illustrated with ck_1 and ck_2 in Fig. 1.

At the end of the SAR conversion, the CDAC is reset with the signal $ck_{\rm res}$ to prevent inter-symbol interference (ISI) in the subsequent input sampling phase. This SAR ADC requires a reset of the CDAC to calibrate the comparators. Comparator calibration is initiated as soon as the CDAC is reset and prior to the next sampling phase. At the same time, charge losses on the reference capacitor are compensated with the clocked reference buffer.

As can be seen from the signal forms of ck_1 and ck_2 in Fig. 1, the conversion time is not constant for each bit decision. The time required for a complete decision of the comparator depends on the input voltage: the larger the input voltage difference, the faster the conversion. As the voltage difference for the MSBs is statistically larger than for the LSBs, the decision time for the MSBs is statistically shorter than for the LSBs.

B. Alternate Comparators

The SAR cycle time is constrained by the comparator decision time and reset time. Any multi-bit/cycle approach acts on the decision time by running multiple decisions in parallel and reducing the total number of serially executed decisions. This approach is favorable if the settling of the CDAC is limiting the SAR conversion speed. Our design has a very short settling time of the CDAC because of the redundancy and the low-impedance capacitive reference voltage, resulting in very fast capacitor-to-capacitor charge equalization. Therefore the CDAC settling did not limit the conversion speed. In parallel to the CDAC settling, the comparator needs to be reset completely to avoid history from the previous bit decision. To fulfill this, either very large reset switches or a non-negligible amount of time is required. Large reset switches are not preferred because they reduce decision speed.

The tackle this problem, a new approach with two comparators running in an alternating fashion is introduced. As can be seen from Fig. 1, decision 1 is taken by comparator 1, while comparator 2 resides in reset mode. When comparator 1 has finished its decision, it goes into reset mode with minimum delay, and comparator 2 is activated. This provides comparator 1 much more time for reset and thus eliminates the reset time from the critical path.

C. Timing

The timing sequence of an asynchronously clocked SAR ADC with alternate comparators is shown in more detail in Fig. 2 and refers to Fig. 1. During the initial sampling phase, both comparators are in reset state (R). The falling clock edge of the external clock $ck_{\rm ext}$ triggers the SAR logic and initiates the decision phase of comparator 1 (D). This is achieved

Authorized licensed use limited to: Carleton University. Downloaded on March 20,2026 at 15:37:36 UTC from IEEE Xplore. Restrictions apply.

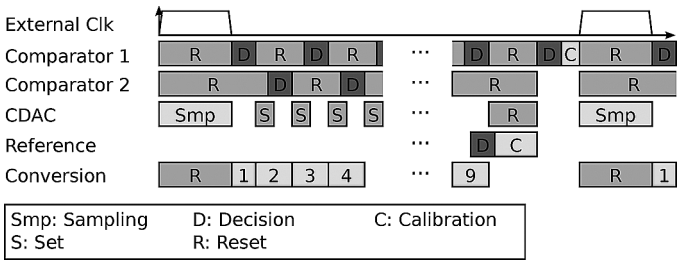

Fig. 2. Asynchronous timing sequence of the SAR ADC with alternate comparators.

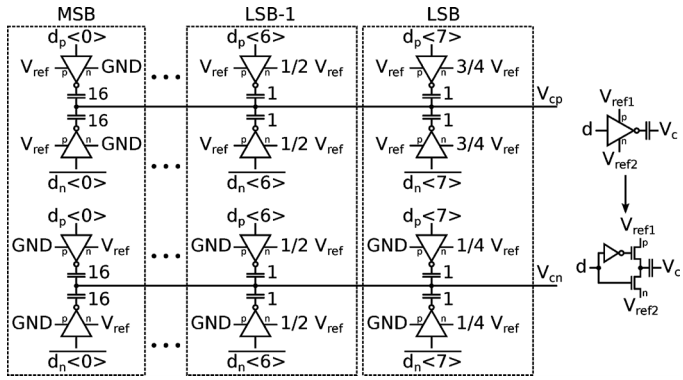

Fig. 3. CDAC design with constant common mode and fractional reference voltages to reduce the number of unit capacitors.

with Set-and-Down switching, in which no initial capacitive switching is involved prior to the first comparison. The result of the comparator is directly fed to the memory and the CDAC, bypassing the decision detect block. This initiates the switching and settling of the CDAC (S). The end of the decision of comparator 1 is sensed and used to trigger the reset of comparator 1 (R) and activate comparator 2 (D). When comparator 2 is sensitive to its input, the CDAC has settled within the settling constraints required by the redundant switching scheme.

When all conversion steps have been completed, one of the comparators is calibrated; this involves one decision (D) and calibrating the offset based on the result (C). Comparators are calibrated alternately; therefore each comparator is calibrated every second cycle. Simultaneously with the CDAC reset, the clocked reference buffer is triggered to re-supply any charge lost on the reference capacitor during the conversion (C).

The rising external clock resets the SAR logic completely, independently of the state of the ADC. This implies that the ADC starts a new conversion cycle in a defined state. By placing the comparator calibration and the reference re-supply at the end of the conversion cycle, the time required for these two operations is used as buffer time for metastability. Unlike in synchronous ADC designs, in which metastability buffer-time has to be provided in every decision cycle, it is sufficient to account for metastability only once for all conversions in asynchronous ADCs. If, for example, conversion 2 requires more time for decision because of a very small input voltage, there is no time left to complete comparator calibration. If comparator calibration is sometimes skipped, performance of the ADC is not affected. In the unlikely event that one conversion takes even more time, the reset of the CDAC and the reference regeneration will be affected. The reference capacitor does not necessarily need to be recharged in every cycle and a missing reset of the CDAC only results in very limited ISI for the next sampling phase. The impact of ISI is small owing to the high input bandwidth. Unlike previously published asynchronous designs, this design can handle metastability without additional circuitry.

In the case of an even longer decision time during one of the conversion cycles, SAR precision will barely be affected. If the last decision is skipped due to the lack of time, it impacts performance only very slightly, as the LSB is very noisy. Any event, in which more than the last bit is skipped is highly unlikely so that it can be considered inexistent for normal applications. Therefore metastability does not pose an issue for this ADC, without having the need of taking special measures for metastability.

III. Building Blocks

A. Capacitive DAC

The capacitive DAC is built with a topology that is similar to the Set-and-Down principle described in [4]. In addition, it implements redundancy and keeps the common mode constant during SAR operation. The speed advantage of the Set-and-Down principle is based on the elimination of a first capacitive switching prior to the first decision and the use of direct feedback from the comparator decision memory to the CDAC without additional logic. The DAC in [4] results in a lower common mode after each CDAC switching event. As no preamplifier is used and the comparator precision is highly dependent on a constant common mode, the DAC is doubled to obtain a constant common mode, as shown in Fig. 3. Each output of the memory, $d_{\mathrm{p}}\langle 0{:}7\rangle$ corresponding to the positive output of the comparators and $d_{\mathrm{n}}\langle 0{:}7\rangle$ corresponding to the negative output of the comparators, connects to both sides of the capacitive array. If, for example, switching $d_{\mathrm{p}}\langle 0\rangle$ from 0 to 1 increases the voltage at V_{cn}, it decreases the voltage at V_{cp} by the same amount, therefore keeping the common mode constant. Each unit capacitor consists of a custom-built metal capacitor connected to two switches. One switch connects to a positive reference voltage, and the other switch connects to the negative reference voltage. As the reference voltages are smaller than $V_{\mathrm{DD}}/2$, NMOS switches are used.

To reduce the settling time of the MSBs, redundancy is implemented for decisions 2–6. This is achieved by not sizing the capacitors in a binary way, as illustrated in Fig. 4. Fig. 5 shows details on the redundant switching scheme. The initial decision range is equal to the full-scale ADC input. As the input voltage and the CDAC have fully settled when the first decision is taken, the first decision is not affected by transient settling errors and the decision range can be reduced by the ideal 50% for the second decision, compared to non-redundant switching. The settling of the CDAC prior to the second decision might not be complete at the time of the decision. Therefore the third decision range is more than 50% of the second decision range with some overlap to account for the settling error. The times displayed $t_{\mathrm{non\text{-}red}}$ and t_{red} indicate the multiples of RC time constants required for settling within less than 0.5 LSBs for non-redundant and redundant switching, respectively. It is assumed that each

Authorized licensed use limited to: Carleton University. Downloaded on March 20,2026 at 15:37:36 UTC from IEEE Xplore. Restrictions apply.

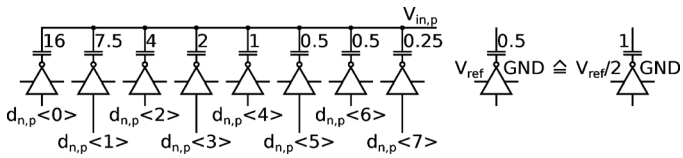

Fig. 4. CDAC capacitor sizes with redundancy implemented.

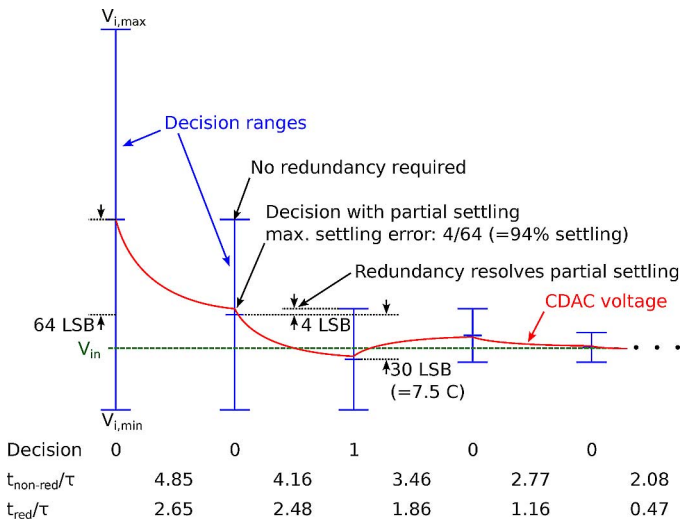

Fig. 5. Details of the redundancy switching scheme with time comparison for redundant and non-redundant switching. Values are given in multiples of time constants ($\tau = RC$) for a settling error < 0.5 LSB.

unit capacitor has its own buffer and that therefore the driver strength is proportional to the switched capacitance.

The redundancy implemented enables a relaxed settling of 94% with no settling error and 93% with < 0.5 LSB settling error. No redundancy would require 99.2% settling, assuming < 0.5 LSB settling error.

The MSB, where the speed advantage from redundant switching is most significant, needs only a bit more than half the settling time as compared to non-redundant switching. The settling for the 6th, 7th and 8th CDAC switching, where no redundancy is implemented and only 1 to 2 LSBs are switched, is below 0.15 LSB, assuming 93% settling, and therefore negligible.

The main drawback of using a constant common mode is the larger number of capacitors, which either impacts the total capacitance of the CDAC or the size of the unit capacitor for an 8b ADC. Normally, the MSB capacitor needs to be 64 times the unit capacitor. A new approach with fractional reference voltages is used to reduce the total number of capacitors, as shown in Figs. 3 and 4. Switching half a capacitor between $V_{\rm ref}$ and GND is equivalent to switching one capacitor between $V_{\rm ref}/2$ and GND, except for the additional parasitic capacitance associated with switching only by $V_{\rm ref}/2$. The additional parasitic capacitance impacts only the gain of the ADC and is compensated with a slightly higher $V_{\rm ref}$.

Switching the fractional capacitors at nodes $V_{\rm cn}$ and $V_{\rm cp}$ between different potentials relaxes the precision requirement of the fractional reference voltages. To switch half a unit capacitor, as shown for the capacitor connected to $d_{\rm p/n}\langle 6\rangle$ in Fig. 3, the capacitor at node $V_{\rm cn}$ is switched between GND and $V_{\rm ref}/2$ and the capacitor at node $V_{\rm cp}$ is switched between $V_{\rm ref}/2$ and $V_{\rm ref}$. If $V_{\rm ref}/2$ is not precise, the total charge switched on nodes $V_{\rm cp}$ and $V_{\rm cn}$ remains constant and therefore no differential error occurs. An imprecise $V_{\rm ref}/2$ only results in a tolerable common-mode shift, which does not affect precision.

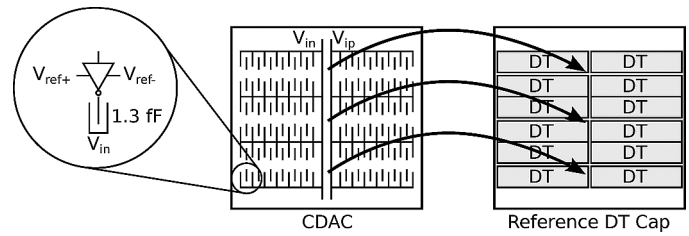

Fig. 6. CDAC layout with area reuse of CDAC and DT reference capacitors.

The balanced switching, as used for $V_{\rm ref}/2$ to relax precision, cannot be replicated for $V_{\rm ref}/4$. It is also balanced, but the switched voltages do not sum up to $V_{\rm ref}$. Therefore an imprecise $V_{\rm ref}/4$ results in a differential error on the CDAC. As $V_{\rm ref}/4$ and $3/4\,V_{\rm ref}$ are only used for the LSB, small errors can be tolerated.

Using $V_{\rm ref}/2$ and $V_{\rm ref}/4$ results in unit capacitors of 2 fF with a total capacitance of only 128 fF on each side. About 1.3 fF of the unit capacitance can be switched, and 0.7 fF accounts for the parasitic capacitances associated to the neighboring metals of the unit capacitor, the MOS parasitic capacitance of the unit capacitor switches, the track-and-hold switches, the input transistors of the comparator, and the reset switch. To achieve good matching, the capacitor size was chosen larger than required for the noise level.

Fast switching of the CDAC requires a low time constant ($\tau = RC$). The capacitance is already optimized, thus the in-line resistance has to be reduced for further savings on the settling time. The in-line resistance consists of the switch resistance and resistance of the $V_{\rm ref}$ reference buffer. A large deep-trench (DT) capacitor [16] of 80 pF is used to buffer $V_{\rm ref}$ and the fractional reference voltages. Consequently, the series resistance of the voltage reference is heavily reduced. To keep the design compact and to reduce metal-wire resistance, the CDAC is placed on top of the reference DT capacitors, as illustrated in Fig. 6. Stacking is possible, because DT capacitors, which are equivalent to DRAM capacitors, only occupy space in the substrate and are connected on the first metal level.

B. Reference Buffer

A novel, very power-efficient, low-output resistance clocked buffer in combination with a high-density capacitor is described. The reference voltage $V_{\rm ref}$ used by the CDAC sets the gain of the ADC. It is controlled by an external voltage and buffered inside the ADC core. The target for the voltage buffer was a simple design at low power consumption. A capacitive recharging buffer, as shown in Fig. 7, is used. The external voltage $V_{\rm master}$ is compared with the internal reference voltage $V_{\rm ref}$ using a clocked comparator. The clock $ck_{\rm res}$ is equal to the reset signal of the CDAC. Therefore the reference regeneration is initiated directly after the last decision. If $V_{\rm ref}$ is smaller than $V_{\rm master}$, the output of the comparator triggers the attached inverter to add charge from $C_{\rm sw}$ to the DT reference capacitor $C_{\rm ref}$. By choosing the

Authorized licensed use limited to: Carleton University. Downloaded on March 20,2026 at 15:37:36 UTC from IEEE Xplore. Restrictions apply.

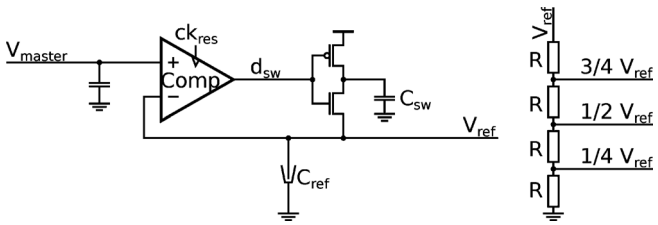

Fig. 7. Clocked reference generator based on charge switching and resistive ladder for fractional reference voltages.

size of $C_{\rm sw}$, the percentage of recharging cycles is determined. To minimize noise on $V_{\rm ref}$, $C_{\rm sw}$ should be chosen such that it is not too large but still provides sufficient robustness. This will result in a recharge of $C_{\rm ref}$ most of the time.

A low output resistance of approximately 2 Ω is guaranteed by the large size of $C_{\rm ref}$. The main advantage of this buffer besides the low power consumption of 0.2 mW are the guaranteed stability of the design and the low temperature dependence.

A resistive divider is used to generate $V_{\rm ref}/2$ as well as $V_{\rm ref}/4$ and $3/4\,V_{\rm ref}$, as shown in Fig. 7. As described earlier, the mismatch of the resistors does not impact performance. Because of the constant current draw of the resistive ladder, discharging $C_{\rm ref}$ by the reference buffer is never required. The charge drawn from $C_{\rm ref}$ from the resistive divider is about 1/3 of the current drawn from the CDAC.

C. Comparator

The comparator is the key component of our design. It determines the accuracy, has the highest influence on speed, and contributes significantly to the power consumption. Therefore special attention is paid to its design.

A sense-amp latch, also known as Strong-ARM latch, is used as a comparator, as shown in Fig. 8. Its main advantage is the high conversion speed, enabled by the single-stage design. Because of the SOI technology, not only process mismatch, but also the dynamic history based on the SOI body-effect will affect the offset. Therefore static offset calibration is not sufficient. Also body-contacted SOI transistors would require history cancellation, but are not used because of their inferior speed performance. A second differential pair M_3 and M_4 is introduced to compensate the offset. It is sized 5 $\times$ smaller than the main differential pair to reduce the impact of M_3 and M_4 on the comparator gain and noise. The lack of a pre-amplifier results in kickback on the two CDAC nodes while one of the comparators is active.

Mismatch in the input transistors M_1 and M_2 of the comparator results in a different kickback on the two input nodes of the CDAC, causing a differential error in these voltages. Therefore the same kickback effect has to occur during calibration to null differential kickback errors. This is ensured by resetting the CDAC and releasing the CDAC switch prior to enabling the comparator.

A fast, low-power calibration circuit similar to that described in [17] is used, shown in Fig. 9. Depending on the decision of the comparator, charge is either added to the DT capacitor $C_{\rm cal}$ or subtracted from $C_{\rm cal}$. The amount of charge added or subtracted is set by the size of $C_{\rm sw}$ and can vary in a wide range

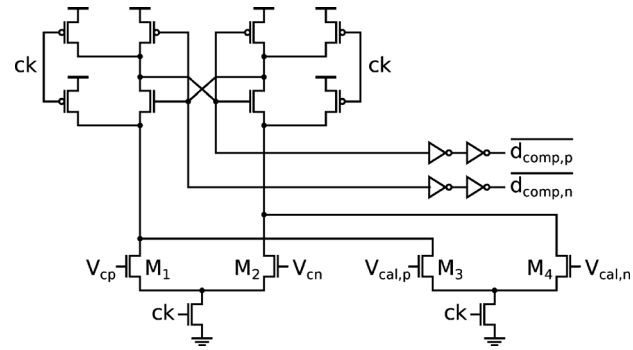

Fig. 8. Sense-Amp comparator with second differential pair for offset calibration.

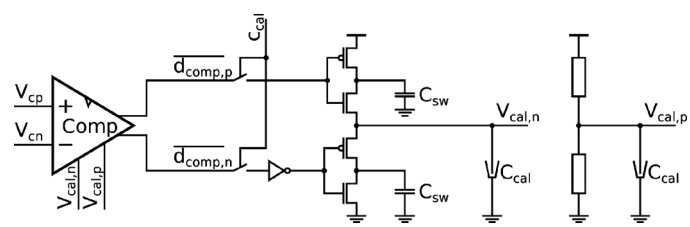

Fig. 9. Low-power comparator calibration based on charge switching.

while the calibration loop remains functional. The smaller $C_{\rm sw}$ is, the lower the noise is on the calibration node $V_{\rm cal,n}$ of the comparator. The second comparator calibration input, $V_{\rm cal,p}$, is set to a constant voltage by a resistive voltage divider and a DT capacitor of the same size as the DT capacitor attached to $V_{\rm cal,n}$. Fast offset calibration therefore eliminates process mismatch, dynamic mismatch from the SOI body effect as well as $1/f$ noise. Precise matching of the offset in both comparators is important to achieve high accuracy.

As the comparator limits the ENOB of the ADC, a careful analysis based on [18] and extensive simulations were carried out to optimize performance. One main aspect of comparator noise is its sensitivity to the input common mode. A lower input common mode is desired for low input-referred noise, as shown in Fig. 10. A lower common mode reduces the bandwidth of the input diff-pair and therefore noise is integrated with a lower bandwidth. Data is extracted from transient noise simulations and corresponds accurately to measurement results. The comparator speed is significantly affected if the input common mode is too low. As kickback from transistors M_1 and M_2 of the comparator lowers the common mode of the CDAC during comparison, the common mode of the comparator during its sensitive time window is lower than the common mode of the input signal when sampled to the CDAC. Too low a common mode introduces the risk of extremely slow comparisons owing to high $\rm V_t$ of a slow process corner, whereas too high a common mode affects the noise performance significantly. Therefore the input common mode to the ADC is chosen to be 500 to 600 mV. The common mode of the ADC is set by the input signal, as there is no buffer between the pads, the CDAC and comparators. To provide margins, measurement results are shown for 600 mV.

As metastability is resolved by comparator gain, it is important to achieve a high gain in a short time. Fig. 11 shows the

Authorized licensed use limited to: Carleton University. Downloaded on March 20,2026 at 15:37:36 UTC from IEEE Xplore. Restrictions apply.

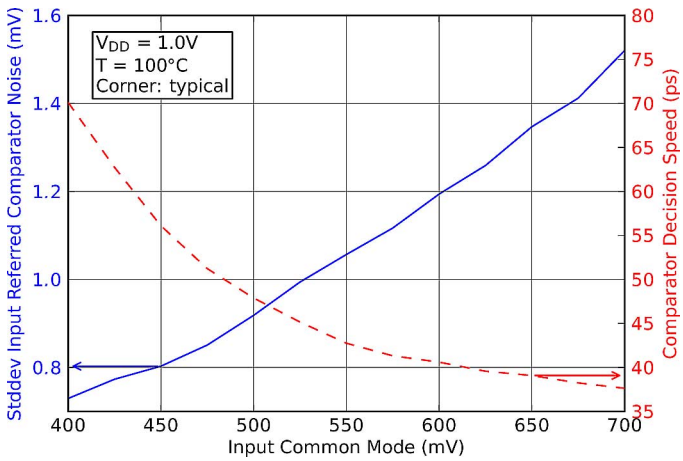

Fig. 10. Input referred noise and decision speed of comparator versus input common mode.

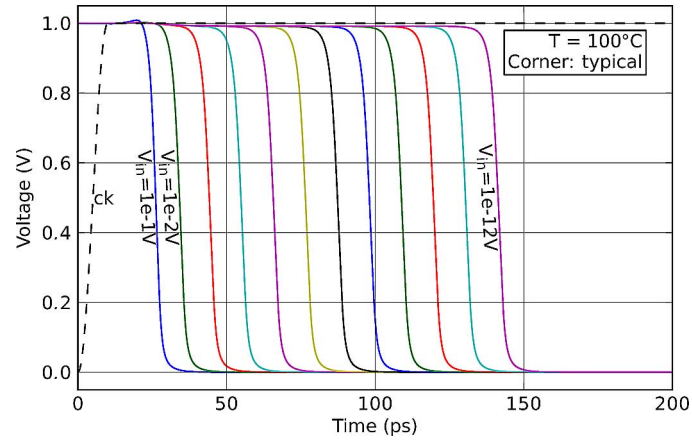

Fig. 11. Gain plot of sense-amp latch for different input voltages. Time can resolve metastability if a complete reset is guaranteed when the SAR cycle is interrupted.

comparator output and comparator clock for different input voltages, based on simulations. As the decision time of the comparator depends logarithmically on the input voltage, even very small input voltage differences can be resolved with acceptable delay. If the comparator is noise free and the CDAC binary, only one comparison can be metastable, namely the comparison, in which the input voltage difference of the comparator $(V_{\rm cp} - V_{\rm cn})$ is smaller than LSB/2. Input referred noise in the comparator still results in an average of one comparison with $(V_{\rm cp} - V_{\rm cn}) < {\rm LSB}/2$, which can be metastable. The redundancy scheme shown in Fig. 4 results in a slightly higher probability for metastability, as the last three conversions are not redundant. Therefore there is approximately a probability of 10^{-12} for a comparator input voltage to be $< 10^{-12}\,{\rm LSB}/2$, which is 1 fV. From Fig. 11 the comparator decision time $t_{\rm dec}$ can be derived as

$$t_{\rm dec} = t_0 + \tau_{\rm cmp} \ln(V_{\rm i}) \tag{1}$$

with $\tau_{\rm cmp} = 4.65$ ps and $t_0 = 10.5$ ps. This means that a worst-case metastability event with a probability of 10^{-12} will take approximately $12\ln(10)\tau_{\rm cmp} = 128$ ps longer than the average conversion. This is less than the 160 ps required for CDAC reset and comparator calibration. The effect of lost calibration on the ADC precision is negligible, since calibration is not required in every cycle to track offset variations in the comparator. Furthermore, reset of the CDAC and the last bit decisions are not affected when events up to 10^{-12} are considered.

D. SAR Logic

The logic block can be divided into two major parts: the data path and the clock path, both of which are described below.

The data path consists of a memory block with attached state logic, as shown in Fig. 12. The decision output of the comparator is directly connected to a number of memory cells. One pair of memory cells is activated at a time by the signal $c_{\rm wr}$, i.e., one memory cell for each output of the comparator. The memory outputs $d_{\rm cap,p}$ and $d_{\rm cap,n}$ are connected to the CDAC.

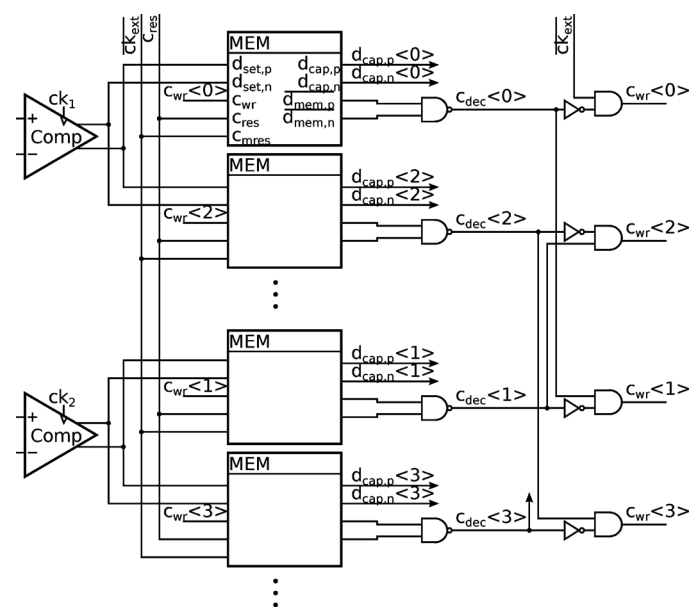

Fig. 12. Memory logic with state detection based on combinatorial logic.

Usually, a state machine consisting of state memory and state transition logic is used to determine the state of the ADC. However, implementing a state machine running at more than 10 GHz is next to impossible, and the approach with a state machine consumes considerable power. Instead, the state of the ADC is derived from the data memory cells with combinatorial logic. A successful decision is detected by the signal $c_{\rm dec}\langle {\rm n}\rangle$, leading to a falling $c_{\rm wr}\langle {\rm n}\rangle$ signal on the memory cell just written and a rising $c_{\rm wr}\langle {\rm n}+1\rangle$ signal on the next memory cell. As two comparators are used, more time is available to disable $c_{\rm wr}\langle {\rm n}\rangle$, which relaxes the timing and saves power.

The memory cell, shown in Fig. 13, is optimized for a fast input-to-output transition to enable early CDAC settling. A typical cycle with a memory write is shown in the lower half of Fig. 13. When $c_{\rm wr}$ is high, node $d_{\rm cap,p}$ floats for increased speed. Only one transistor is used to buffer the signal. The upper loop of the memory cell stores the value at lower speed. Once the

Authorized licensed use limited to: Carleton University. Downloaded on March 20,2026 at 15:37:36 UTC from IEEE Xplore. Restrictions apply.

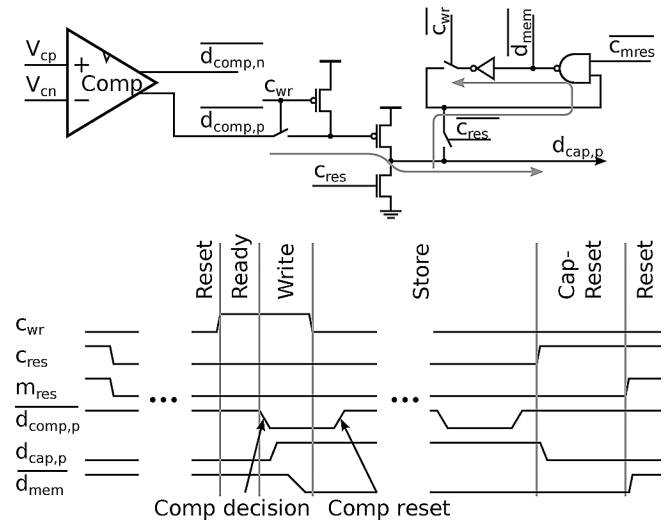

Fig. 13. Memory cell with dynamic buffer and optimized signal transition path.

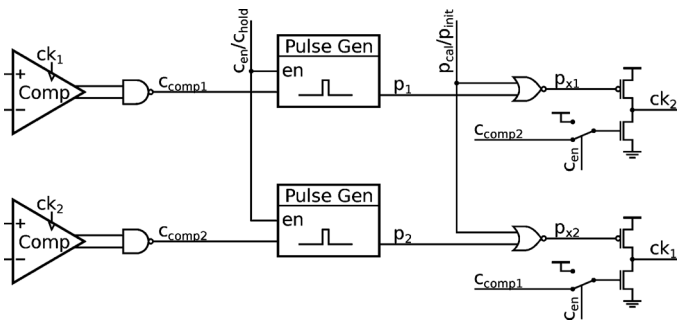

Fig. 14. Asynchronous clock logic with decision detect and dynamic clock driver.

memory loop has settled, c_{wr} can be disabled. The outputs of the memory cells $d_{\mathrm{cap,p/n}}$ are buffered and/or inverted and connected to the inputs $d_{\mathrm{p/n}}$ of the CDAC.

However, not only the data path is critical for maximum conversion speed, also the clock path is time-critical because generating the clock edges for the two comparators requires a small number of combinational blocks, as shown in Fig. 14. A simple NAND gate is used as a decision-detect block. If, for example, $c_{\mathrm{comp},1}$ indicates a successful decision of comparator 1, ck_1 is disabled with minimum logic delay. At the same time, a pulse p_1 is generated to enable ck_2. The signal ck_2 is always enabled after ck_1 has been set to GND. Non-overlapping clocks ensure that kickback from comparator 1 does not affect the decision of comparator 2 and vice versa. The signal c_{en} is used to activate the clock path, whereas the signal c_{hold} is used to stop the asynchronous clock generation for CDAC reset. The signal p_{init} is used to initiate the MSB cycle, and p_{cal} is used to re-initiate the calibration after c_{hold} has disabled the clock path.

To improve speed, the logic is optimized for minimum delay from comparator output to clock reset by reducing the number of combinatorial elements and using pre-charged/dynamic logic for the transistors driving ck_1 and ck_2. The settling time of the CDAC is always shorter than the time required to generate the comparator clock signal after the detection of a comparator decision.

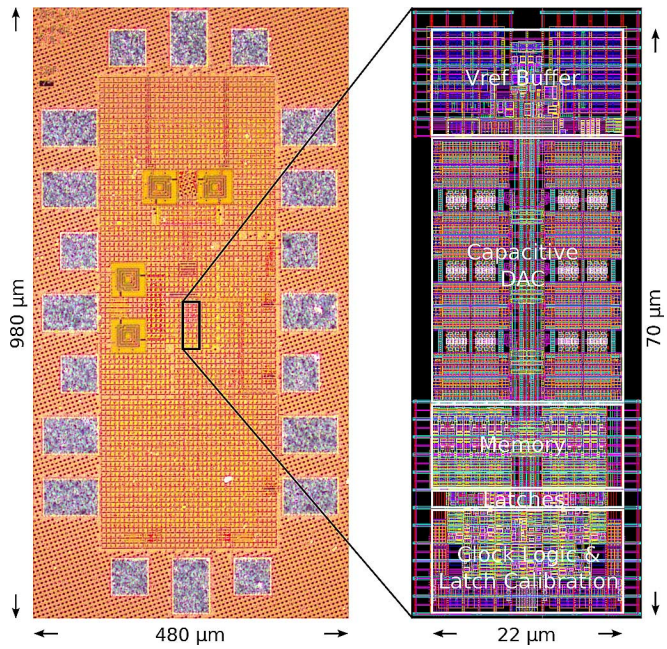

Fig. 15. Chip micrograph with layout view.

IV. Measurement Results

The ADC is manufactured in a 32 nm digital SOI CMOS process with a core area of 22×70 µm^2, as shown in Fig. 15. The CDAC occupies most of the area, followed by the memory, the reference generation and the SAR logic. The comparators are negligible in size.

The nominal full-scale input of the ADC is 500 $\mathrm{mV_{pp,diff}}$ with a common mode of 500 to 600 mV. The reference voltage is nominally set to 380 mV to compensate for the capacitive divider due to the parasitic capacitance, which is associated with the CDAC output nodes. The ADC operates from a single 1.0 V supply, but tolerates 0.8 to 1.2 V. The measured total power consumption of 3.1 mW at 1.0 V supply and 1.2 GS/s is dominated by the SAR logic. The total power consumption is composed as follows: 0.8 mW for the two comparators including the offset calibration, 1.2 mW for the asynchronous clock logic, 0.7 mW for the data memory and state logic, 0.2 mW for the reference buffer, and 0.2 mW for the CDAC, based on simulation results.

Fig. 16 shows SNDR versus input frequency at a sampling frequency of 1.0 GS/s and 1 dB backoff from full-scale. The SNDR for our samples is between 38.5 dB and 39.6 dB in the first and the second Nyquist zone [14]. SNDR of the typical corner samples is above 39.3 dB.

The main SNDR contributors are the comparators, with about 80% of the total noise power. Second is quantization noise, followed by the noise introduced by the reference buffer and the thermal noise of the CDAC capacitance.

SNDR versus sampling frequency is shown in Fig. 17. FoM at 1.0 V supply and 1.2 GS/s is 34 fJ/conv.-step and best FoM of 28 fJ/conv.-step is found at 0.9 V supply and 1.0 GS/s. SNDR and FoM are largely independent of the sampling frequency [14]. SNDR degrades gracefully when the sampling frequency is too high to allow a complete SAR cycle. The initial steepness of the SNDR degradation depends highly on the mismatch of the input

Authorized licensed use limited to: Carleton University. Downloaded on March 20,2026 at 15:37:36 UTC from IEEE Xplore. Restrictions apply.

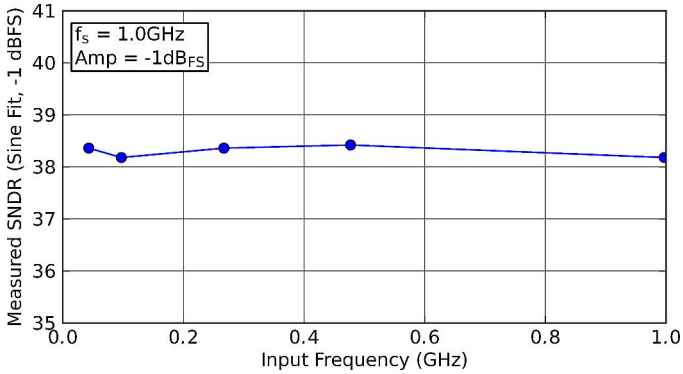

Fig. 16. Measured SNDR at -1 dB$_{\rm FS}$ versus input frequency for the first and the second Nyquist zone [19].

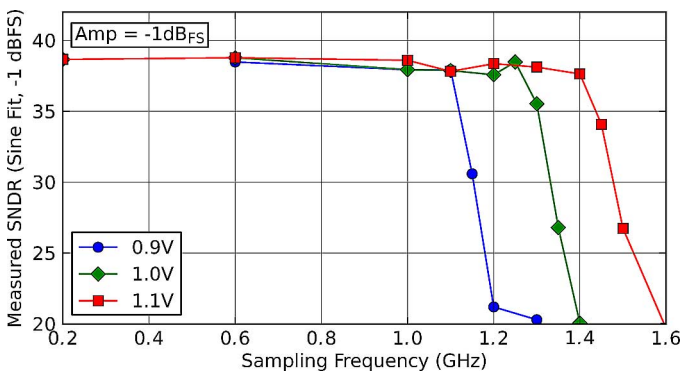

Fig. 17. Measured SNDR at -1 dB$_{\rm FS}$ versus sampling frequency.

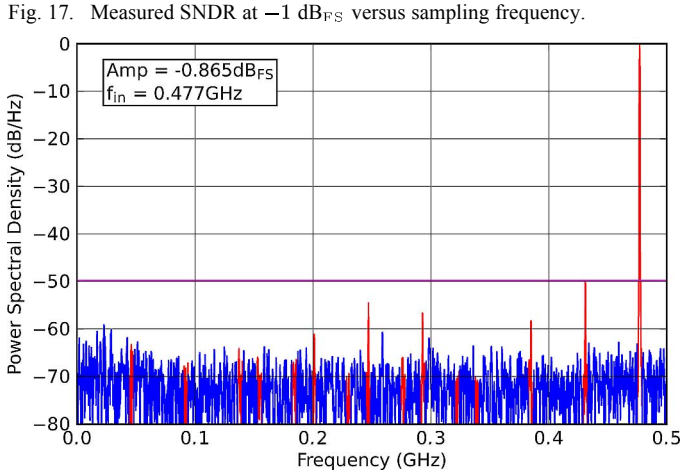

Fig. 18. Power spectral density.

transistors of the comparator, because the comparator offset calibration is affected first.

The spectrum of a typical corner sample is shown in Fig. 18 at 477 MHz input frequency, with an SFDR of 49.9 dB. SNDR degradation of the ADC at higher frequencies is only caused by the reduced gain. The 3 dB bandwidth is approximately 5 GHz, as seen in Fig. 19.

DNL and INL are below 0.79 LSB and 0.91 LSB [14], respectively, as shown in Fig. 20. The systematic INL steps at 1/4, 1/2 and 3/4 full-scale input are assumed to be due to the CDAC layout, in which the MSB and MSB+1 capacitors are located at the sides of the capacitor arrays.

A normalized area comparison to previously reported 6+b SAR ADCs is shown in Fig. 21.

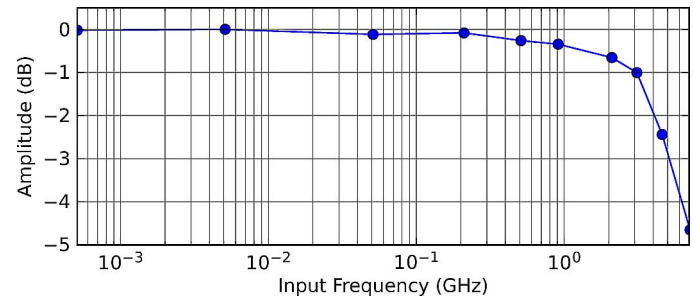

Fig. 19. Measured gain versus input frequency.

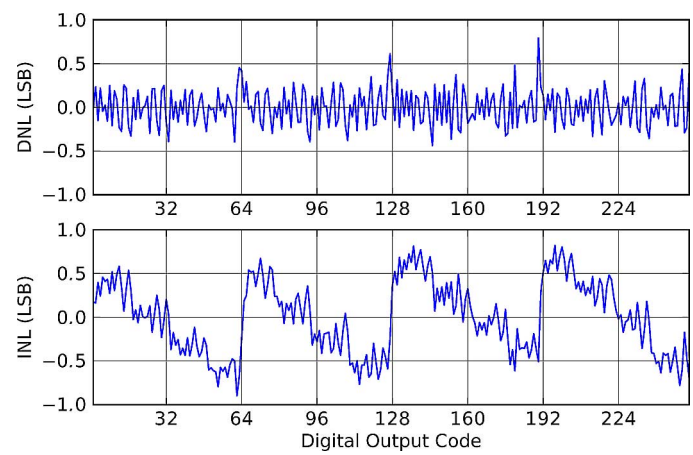

Fig. 20. Measured INL and DNL.

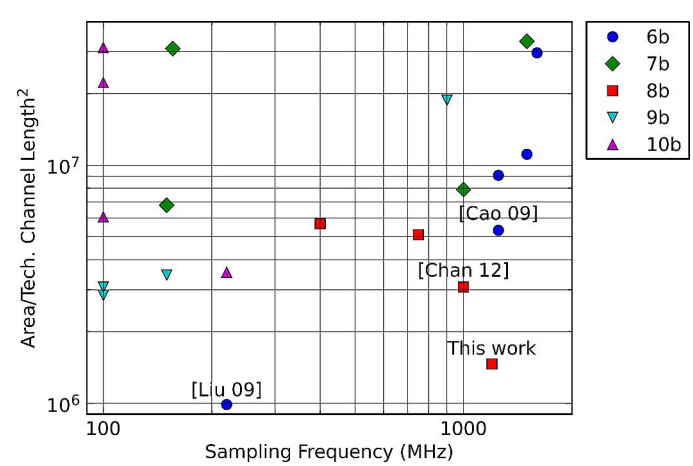

Fig. 21. Comparison of previously published ADCs [20]: Normalized area (area/channel-length^2) versus sampling frequency.

The single-channel FoM performance comparison is shown in Fig. 22 [20].

The performance figures of the ADC are summarized in Table I.

V. Conclusion

An 8b SAR ADC running at 1.2 GS/s based on alternate comparators has been presented. This new SAR approach improves speed by 20–30% at no additional power and complexity.

An optimized redundant switching scheme based on unit capacitors in combination with a low-ohmic reference buffer eliminates the CDAC settling time from the critical path. Eliminating a dedicated state machine and integrating it into the deci-

Authorized licensed use limited to: Carleton University. Downloaded on March 20,2026 at 15:37:36 UTC from IEEE Xplore. Restrictions apply.

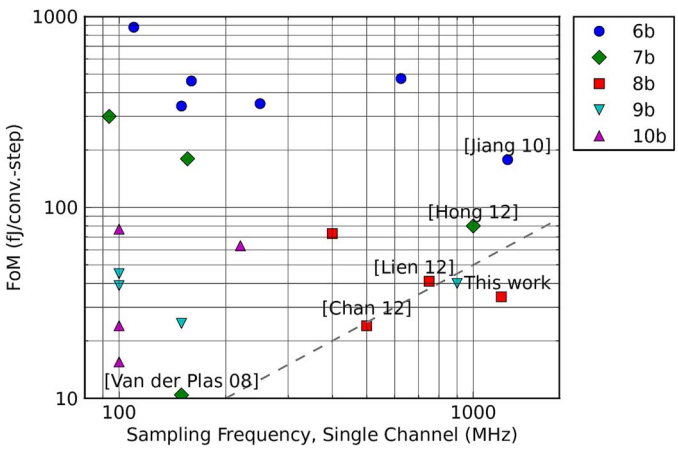

Fig. 22. Comparison of previously published ADCs [20]: FoM versus sampling frequency (single channel).

TABLE I
PERFORMANCE SUMMARY

Architecture	SAR		
Technology	32 nm CMOS SOI		
Resolution	8 b		
Supply Voltage	0.9 V	1.0 V	1.1 V
SNDR near Nyquist	38.8 dB	39.3 dB	39.3 V
Sampling Speed	1.0 GS/s	1.2 GS/s	1.3 GS/s
Power	2.0 mW	3.06 mW	4.2 mW
FoM/conv.-step	28 fJ	34 fJ	43 fJ
Area	0.0015 mm^2		

sion memory further improved speed. Dynamic logic was used where required to reduce logic delays. The ADC is 60% faster than previously reported 8+b SAR ADCs [20].

Power savings were achieved by a new, clocked reference buffer based on charge switching, elimination of state machine and a small CDAC capacitance.

Small area was achieved by a custom-designed CDAC with fractional reference voltages and small unit capacitors as well as by the re-use of the CDAC area by the reference buffer capacitor.

The ADC has the smallest area compared with previously reported ADCs and the lowest FoM of previously reported > 500 MS/s/channel ADCs [1].

REFERENCES

[1] B. Murmann, "ADC Performance Survey 1997–2013," Stanford Univ., 2013 [Online]. Available: http://www.stanford.edu/~murmann/adcsurvey.html

[2] J. McCreary and P. R. Gray, "A high-speed, all-MOS, successive-approximation weighted capacitor A/D conversion technique," in *IEEE ISSCC Dig. Tech. Papers*, 1975, vol. XVIII, pp. 38–39.

[3] J. McCreary and P. R. Gray, "All-MOS charge redistribution analog-to-digital conversion techniques. I," *IEEE J. Solid-State Circuits*, vol. 10, no. 6, pp. 371–379, Dec. 1975.

[4] C.-C. Liu, Y.-T. Huang, G.-Y. Huang, S.-J. Chang, C.-M. Huang, and C.-H. Huang, "A 6-bit 220-MS/s time-interleaving SAR ADC in 0.18-μm digital CMOS process," in *Proc. Int. Symp. VLSI Design, Automation and Test*, 2009, pp. 215–218.

[5] F. Maloberti, "Successive approximation converter," in *Data Converters*. New York, NY, USA: Springer, 2007, ch. 4.7.

[6] G. Van der Plas and B. Verbruggen, "A 150 MS/s 133 μW 7 bit ADC in 90 nm digital CMOS," *IEEE J. Solid-State Circuits*, vol. 43, no. 12, pp. 2631–2640, Dec. 2008.

[7] T. Jiang, W. Liu, F. Y. Zhong, C. Zhong, K. Hu, and P. Y. Chiang, "A single-channel, 1.25-GS/s, 6-bit, 6.08-mW asynchronous successive-approximation ADC with improved feedback delay in 40-nm CMOS," *IEEE J. Solid-State Circuits*, vol. 47, no. 10, pp. 2444–2453, Oct. 2012.

[8] Y.-C. Lien, "A 4.5-mW 8-b 750-MS/s 2-b/step asynchronous sub-ranged SAR ADC in 28-nm CMOS technology," in *IEEE Symp. VLSI Circuits Dig.*, 2012, pp. 88–89.

[9] Z. Cao, S. Yan, and Y. Li, "A 32 mW 1.25 GS/s 6b 2 b/step SAR ADC in 0.13 μm CMOS," *IEEE J. Solid-State Circuits*, vol. 44, no. 3, pp. 861–873, Mar. 2009.

[10] H. Wei, C.-H. Chan, U.-F. Chio, S.-W. Sin, S.-P. U, R. P. Martins, and F. Maloberti, "An 8-b 400-MS/s 2-b-per-cycle SAR ADC with resistive DAC," *IEEE J. Solid-State Circuits*, vol. 47, no. 11, pp. 2763–2772, Nov. 2012.

[11] C.-C. Liu, S.-J. Chang, G.-Y. Huang, Y.-Z. Lin, C.-M. Huang, C.-H. Huang, L. Bu, and C.-C. Tsai, "A 10b 100 MS/s 1.13 mW SAR ADC with binary-scaled error compensation," in *IEEE ISSCC Dig. Tech. Papers*, 2010, pp. 386–387.

[12] Y.-Z. Lin, C.-C. Liu, G.-Y. Huang, Y.-T. Shyu, and S.-J. Chang, "A 9-bit 150-MS/s 1.53-mW subranged SAR ADC in 90-nm CMOS," in *IEEE Symp. VLSI Circuits Dig.*, 2010, pp. 243–244.

[13] D. Stepanovic and B. Nikolic, "A 2.8 GS/s 44.6 mW time-interleaved ADC achieving 50.9 dB SNDR and 3 dB effective resolution bandwidth of 1.5 GHz in 65 nm CMOS," in *IEEE Symp. VLSI Circuits Dig.*, 2012, pp. 84–85.

[14] L. Kull, T. Toifl, M. Schmatz, P. A. Francese, C. Menolfi, M. Brändli, M. Kossel, T. Morf, T. M. Andersen, and Y. Leblebici, "A 3.1 mW 8b 1.2 GS/s single-channel asynchronous SAR ADC with alternate comparators for enhanced speed in 32 nm digital SOI CMOS," in *IEEE ISSCC Dig. Tech. Papers*, 2013, pp. 468–469.

[15] L. Kull, T. Toifl, M. Schmatz, P. A. Francese, C. Menolfi, M. Braendli, M. Kossel, T. Morf, T. M. Andersen, and Y. Leblebici, "A 35 mW 8b 8.8 GS/s SAR ADC with low-power capacitive reference buffers in 32 nm digital SOI CMOS," in *IEEE Symp. VLSI Circuits Dig.*, 2013, pp. 260–261.

[16] B. Jayaraman, S. Gupta, Y. Zhang, P. Goyal, H. Ho, R. Krishnan, S. Fang, S. Lee, D. Daley, K. McStay, B. Wunder, J. Barth, S. Deshpande, P. Parries, R. Malik, P. Agnello, S. Stiffler, and S. S. Iyer, "Performance analysis and modeling of deep trench decoupling capacitor for 32 nm high-performance SOI processors and beyond," in *Proc. IEEE Int. Conf. IC Design & Technol. (ICICDT)*, 2012, pp. 1–4.

[17] M. Miyahara, Y. Asada, D. Paik, and A. Matsuzawa, "A low-noise self-calibrating dynamic comparator for high-speed ADCs," in *Proc. IEEE Asian Solid-State Circuits Conf.*, 2008, pp. 269–272.

[18] P. Nuzzo, F. D. Bernardinis, P. Terreni, and G. Van der Plas, "Noise analysis of regenerative comparators for reconfigurable ADC architectures," *IEEE Trans. Circuits Syst. II*, vol. 55, no. 6, pp. 1441–1454, Jul. 2008.

[19] Noise (total), IEEE Standard for Terminology and Test Methods for Analog-to-Digital Converters, IEEE Standards Assoc., IEEE Instrumen. Meas. Soc., 2010, ch. 9.

[20] All papers from IEEE Xplore with search term 'SAR ADC' and at least 6b resolution, 2012, http://www.ieeexplore.ieee.org/.

Lukas Kull (S'10) received the M.Sc. degree in electrical engineering from the Swiss Federal Institute of Technology (ETH), Zurich, Switzerland, in 2007. He has been enrolled as a Ph.D. student at the Swiss Federal Institute of Technology, Lausanne (EPFL), Switzerland, since 2010.

He joined IBM Research – Zurich, Rüschlikon, Switzerland, in 2010, where he has been involved in analog circuit design for high-speed ADCs. His research interests include analog circuit design, IR and THz imaging. In these areas he authored or co-authored nine patents and several technical publications.

Authorized licensed use limited to: Carleton University. Downloaded on March 20,2026 at 15:37:36 UTC from IEEE Xplore. Restrictions apply.

Thomas Toifl (S'97–M'99–SM'09) received the Dipl.-Ing. (M.S.) degree and the Ph.D. degree (with highest honors) from Vienna University of Technology, Austria, in 1995 and 1999, respectively.

In 1996, he joined the Microelectronics Group of the European Research Center for Particle Physics (CERN), Geneva, Switzerland, where he developed radiation-hard circuits for detector synchronization and data transmission, which were integrated in the four particle detector systems of the new Large Hadron Collider (LHC).

In 2001, he joined the IBM Research – Zurich, Rüschlikon, Switzerland, where since then he has been working on multi-gigabit per second, low-power communication circuits in advanced CMOS technologies. In that area he authored or co-authored nineteen patents and more than fifty technical publications. Since July 2008 he manages the I/O Link technology group at the IBM Zurich Research Laboratory.

Dr. Toifl received the Beatrice Winner Award for Editorial Excellence at the 2005 IEEE International Solid-State Circuits Conference (ISSCC).

Martin Schmatz received the Ph.D. degree from ETH Zurich and joined IBM Research – Zurich in 1999. He established and managed the I/O Link Technology effort optimizing data transport in server systems. In 2008, he took over management responsibilities for the Systems Department at IBM Research – Zurich, leading research on a wide range of server-system building blocks.

Dr. Schmatz contributed to OIF and JEDEC standards. He is a member of the IBM Academy of Technology and the IBM Technical Experts Council, and has an MBA from the Henley Management College in the U.K.

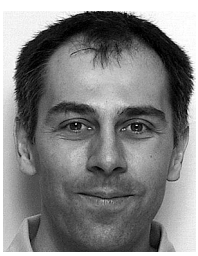

Pier Andrea Francese received a degree in electrical engineering (*cum laude*) from the Politecnico di Milano, Italy, in 1993, and the Ph.D. degree from the Swiss Federal Institute of Technology of Zurich (ETH), in 2005.

Since June 2010, after working for Teradyne, Philips Semiconductors, and National Semiconductor, he is a Research Staff Member at IBM Research – Zurich, Rüschlikon, Switzerland, where he focuses on the development of high-speed low-power I/O transceiver circuits in advanced CMOS technologies.

Christian Menolfi (S'97–M'99) received the Dipl. Ing. degree and the Ph.D. degree in electrical engineering from the Swiss Federal Institute of Technology (ETH), Zurich, in 1993 and 2000, respectively.

From 1993 to 2000, he was with the Integrated Systems Laboratory, ETH Zurich, as a Research Assistant, where he worked on highly sensitive CMOS VLSI data-acquisition circuits for silicon-based microsensors. Since 2000, he has been with IBM Research – Zurich, Rüschlikon, Switzerland, where he is involved in the design of multi-gigabit low-power communication circuits in advanced CMOS technologies.

Matthias Brändli received the Dipl. Ing. (M.Sc.) degree in electrical engineering from the Swiss Federal Institute of Technology (ETH), Zurich, in 1997.

From 1998 to 2001, he was with the Integrated Systems Laboratory of the Swiss Federal Institute of Technology, working on deep-submicron technology VLSI design challenges, digital video image processing for biomedical applications, and testability of CMOS circuits. In 2001 he joined the Microelectronics Design Center of ETH Zurich, where he was involved in numerous digital and mixed-signal ASIC design projects, worked on EDA design automation, and contributed to teaching. In 2008, he joined IBM Research – Zurich, Rüschlikon, Switzerland, where he works on multi-Gb/s, low-power communication circuits in advanced CMOS technologies.

Marcel Kossel (S'99–M'02–SM'09) received the Dipl. Ing. and Ph.D. degrees in electrical engineering from the Swiss Federal Institute of Technology (ETH), Zurich, in 1997 and 2000, respectively.

He joined IBM Research – Zurich in 2001, where he is involved in analog circuit design for high-speed serial links. His research interests include analog circuit design and RF measurement techniques. He has also worked in the field of microwave tagging systems and radio-frequency identification systems.

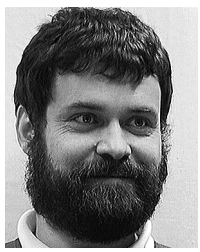

Thomas Morf (S'89–M'96–SM'09) received the B.S. degree from the Zurich University of Applied Science, Switzerland, the M.S. degree from the University of California at Santa Barbara (UCSB), and the Ph.D. from the Swiss Federal Institute of Technology (ETH) in Zurich, Switzerland.

From 1996 to 1999, he led a research group in the area of InP-HBT circuit design and technology also at ETH. In 1999, he joined IBM Research – Zurich, Rüschlikon, Switzerland. His current research interests include ESD circuit protection, electrical and optical high-speed high-density interconnects, and THz antennas and detectors. He has co-authored more than 80 papers.

Toke Meyer Andersen (S'10) received the B.Sc. and M.Sc. degrees from the Technical University of Denmark (DTU), Kgs. Lyngby, Denmark, in 2008 and 2010, respectively. He is currently pursuing the Ph.D. degree at the Power Electronic Systems Laboratory (PES), Swiss Federal Institute of Technology (ETH) Zurich, Switzerland, in collaboration with IBM Research – Zurich, Rüschlikon, Switzerland.

His research interests include analysis, design, implementation, and optimization of on-chip power converters in deep-submicron CMOS technologies.

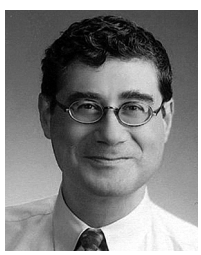

Yusuf Leblebici (M'90–SM'98–F'10) received the B.Sc. and M.Sc. degrees in electrical engineering from Istanbul Technical University, Istanbul, Turkey, in 1984 and 1986, respectively, and the Ph.D. degree in electrical and computer engineering from the University of Illinois, Urbana-Champaign (UIUC), IL, USA, in 1990.

Between 1991 and 2001, he worked as a faculty member at UIUC, at Istanbul Technical University, and at Worcester Polytechnic Institute (WPI). In 2000–2001, he also served as the Microelectronics Program Coordinator at Sabanci University. Since 2002, he has been a Chair Professor at the Swiss Federal Institute of Technology in Lausanne (EPFL) and Director of the Microelectronic Systems Laboratory. His research interests include design of high-speed CMOS digital and mixed-signal integrated circuits, computer-aided design of VLSI systems, intelligent sensor interfaces, modeling and simulation of semiconductor devices, and VLSI reliability analysis. He is a coauthor of six textbooks: *Hot-Carrier Reliability of MOS VLSI Circuits* (Kluwer Academic, 1993), *CMOS Digital Integrated Circuits: Analysis and Design* (McGraw-Hill, 1st Ed. 1996, 2nd Ed. 1998, 3rd Ed. 2002), *CMOS Multichannel Single-Chip Receivers for Multi-Gigabit Optical Data Communications* (Springer, 2007), *Fundamentals of High Frequency CMOS Analog Integrated Circuits* (Cambridge University Press, 2009), *Nanosystems Design and Technology* (Springer, 2009), and *Extreme Low-Power Mixed Signal IC Design: Subthreshold Source-Coupled Circuits* (Springer, 2011), as well as more than 300 articles published in various journals and conferences.

Dr. Leblebici has served as an Associate Editor of IEEE TRANSACTIONS ON CIRCUITS AND SYSTEMS II and IEEE TRANSACTIONS ON VERY LARGE SCALE INTEGRATION (VLSI) SYSTEMS. He also served as the general co-chair of the 2006 European Solid-State Circuits Conference and the 2006 European Solid State Device Research Conference (ESSCIRC/ESSDERC). He was elected as a Distinguished Lecturer of the IEEE Circuits and Systems Society for 2010–2011.

Authorized licensed use limited to: Carleton University. Downloaded on March 20,2026 at 15:37:36 UTC from IEEE Xplore. Restrictions apply.