Assignment 3 Due Date April 8th

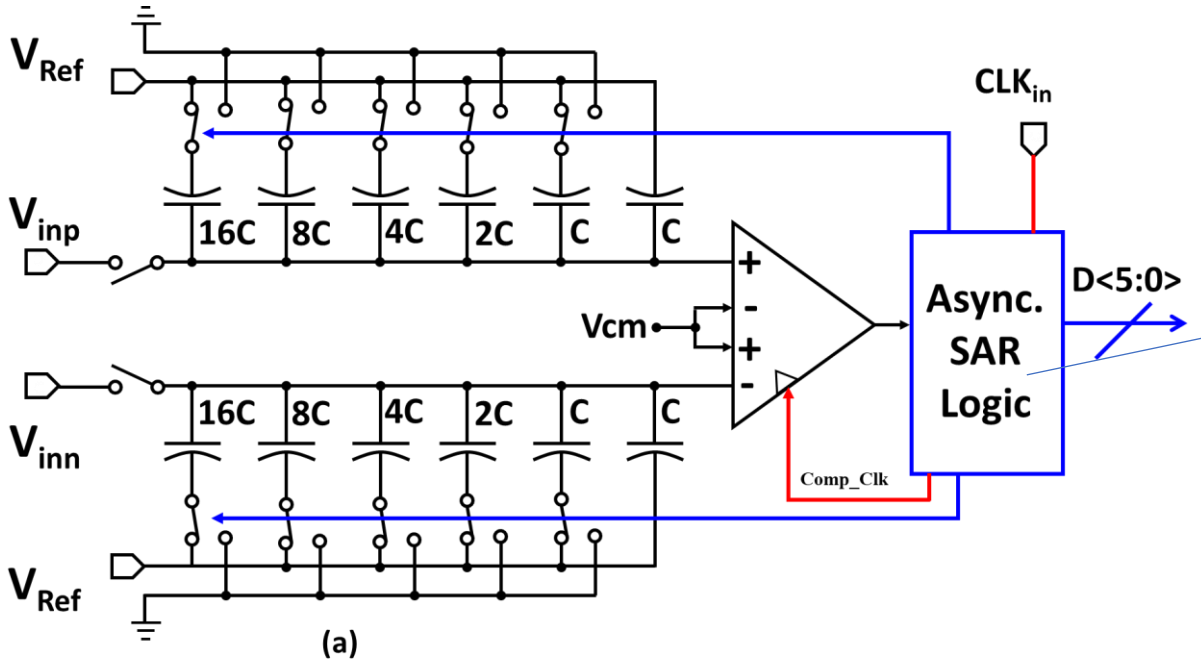

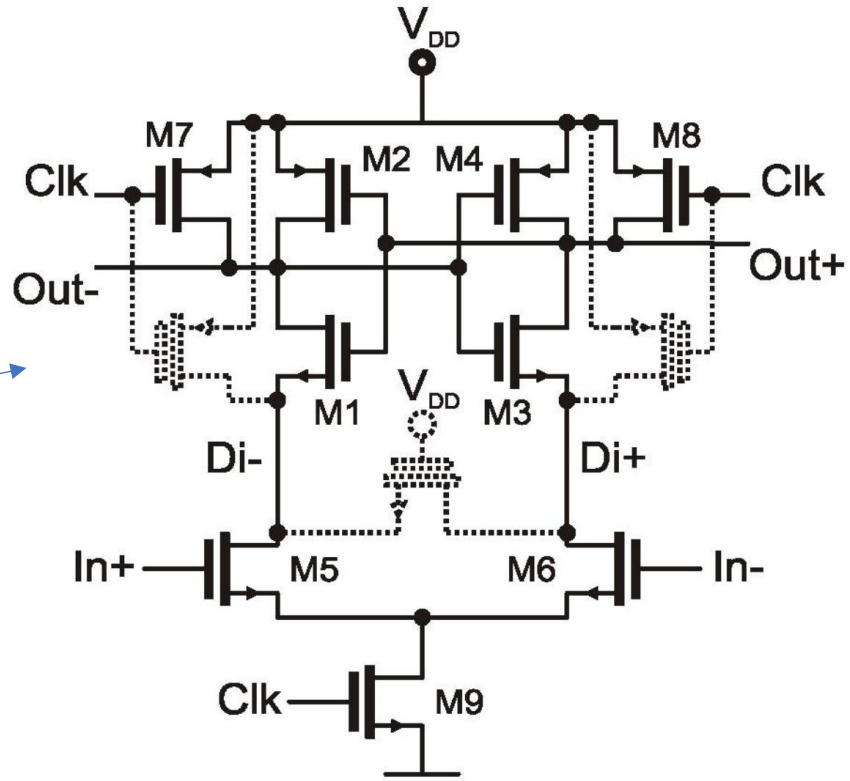

The objective of this assignment is to design a 5-bit asynchronous SAR ADC running at 500 MS/s for a 450mV dynamic range

A) Build the SAR logic to generate a clock or 'ready' signal for the next bit conversion.

B) Show simulation results and calculate ENOB