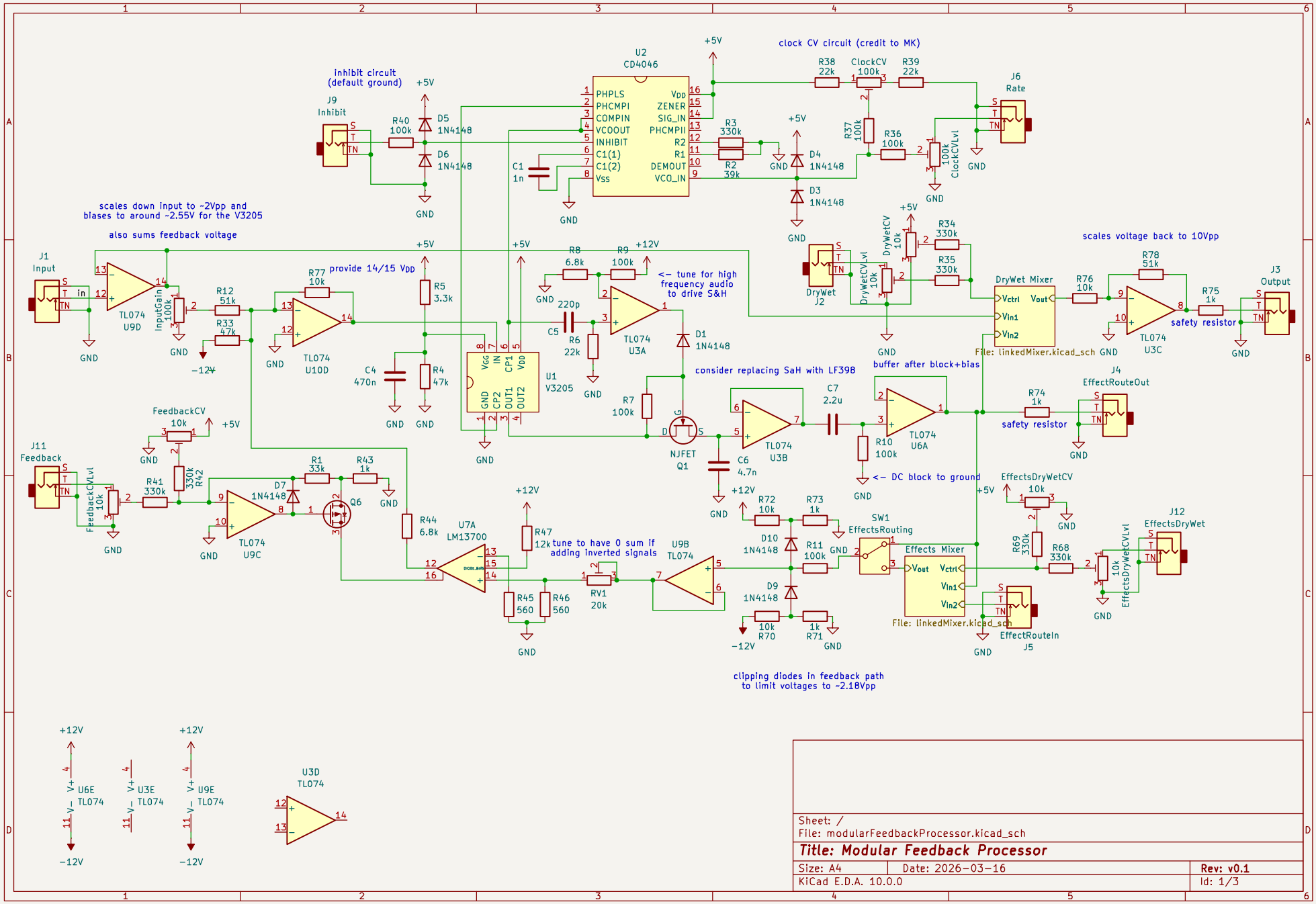
inhibit circuit
(default ground)
J9
Inhibit
R40
100k
D5
1N4148
D6
1N4148
+5V
GND
U2
CD4046
PHPLS
PHCMPI
COMPIN
VCOOUT
INHIBIT
C1(1)
C1(2)
Vss
Vdd
ZENER
SIG_IN
PHCMPII
R2
R1
DEMOUT
VCO_IN
C1
1n
R3
330k
R2
39k
D4
1N4148
D3
1N4148
clock CV circuit (credit to MK)
R38
22k
ClockCV
100k
R39
22k
R37
100k
R36
100k
100k
ClockCVLvl
J6
Rate
scales down input to ~2Vpp and
biases to around ~2.55V for the V3205
also sums feedback voltage
J1
Input
TL074
U9D
InputGain
100k
R12
51k
R33
47k
−12V
R77
10k
provide 14/15 Vdd
TL074
U10D
R5
3.3k
C4
470n
R4
47k
U1
V3205
Vgg
IN
CP1
Vdd
GND
CP2
OUT1
OUT2
R8
6.8k
R9
100k
+12V
<- tune for high
frequency audio
to drive S&H
C5
220p
R6
22k
TL074
U3A
D1
1N4148
consider replacing SaH with LF398
R7
100k
NJFET
Q1
C6
4.7n
TL074
U3B
C7
2.2u
R10
100k
<- DC block to ground
buffer after block+bias
TL074
U6A
DryWet
J2
DryWetCV
10k
DryWetCV-lvl
10k
R34
330k
R35
330k
DryWet Mixer
Vctrl
Vout
Vin1
Vin2
File: linkedMixer.kicad_sch
scales voltage back to 10Vpp
R76
10k
R78
51k
TL074
U3C
R75
1k
safety resistor
J3
Output
R74
1k
safety resistor
J4
EffectRouteOut
FeedbackCV
10k
J11
Feedback
FeedbackCVLvl
10k
R41
330k
330k
R42
TL074
U9C
D7
1N4148
R1
33k
R43
1k
Q6
R44
6.8k
U7A
LM13700
R47
12k
tune to have 0 sum if
adding inverted signals
R45
560
R46
560
RV1
20k
U9B
TL074
R72
10k
R73
1k
D10
1N4148
R11
100k
D9
1N4148
10k
R70
1k
R71
SW1
EffectsRouting
Effects Mixer
File: linkedMixer.kicad_sch
EffectsDryWetCV
10k
R69
330k
R68
330k
10k
EffectsDryWetCVLvl
J12
EffectsDryWet
EffectRouteIn
J5
clipping diodes in feedback path
to limit voltages to ~2.18Vpp
U6E
TL074
U3E
TL074
U9E
TL074
U3D
TL074
Sheet: /
File: modularFeedbackProcessor.kicad_sch
Title: Modular Feedback Processor
Size: A4
Date: 2026-03-16
Rev: v0.1
KiCad E.D.A. 10.0.0
Id: 1/3

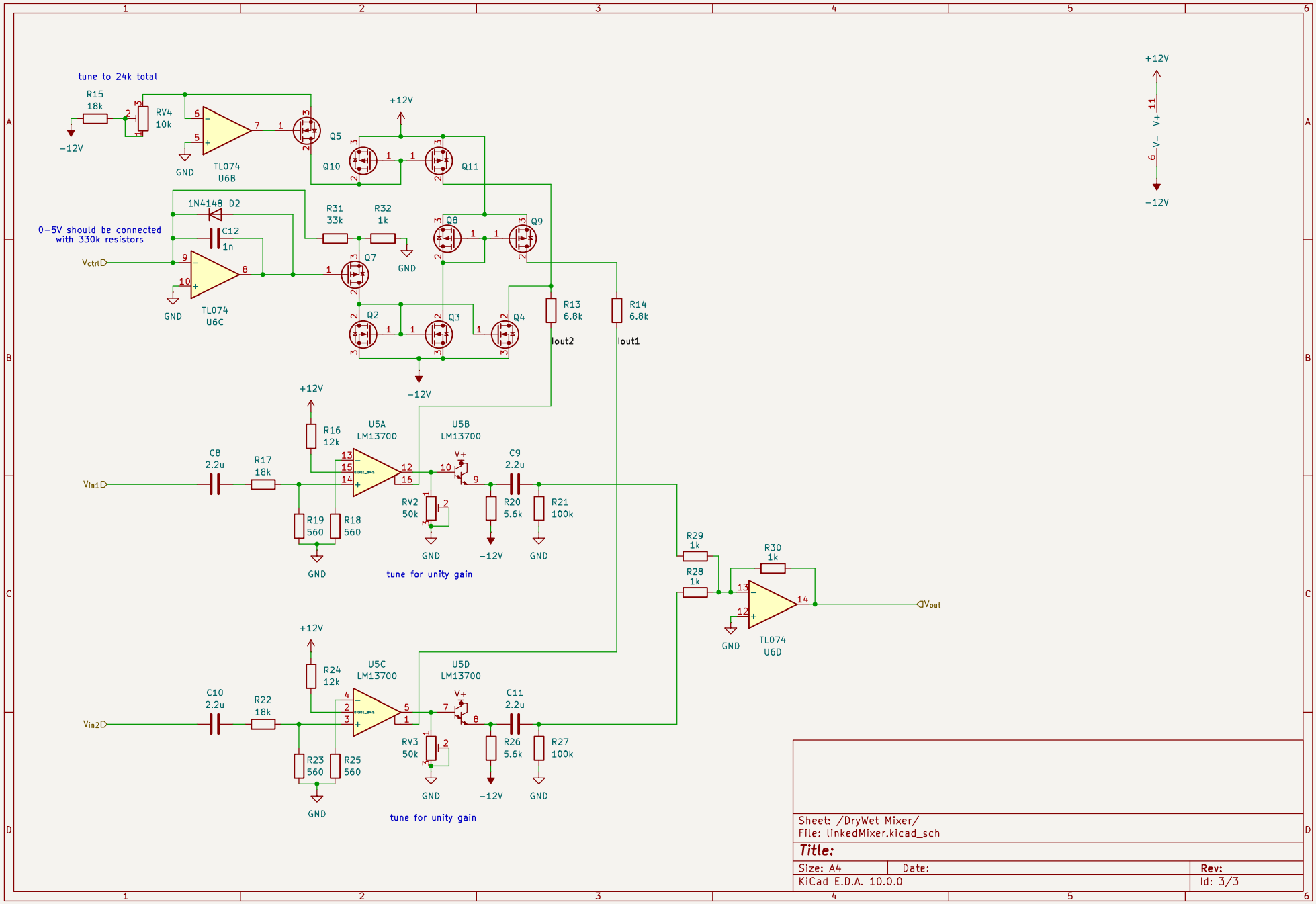
tune to 24k total
R15
18k
RV4
10k
-12V
GND
TL074
U6B
Q5
Q10
Q11
+12V
1N4148 D2
C12
1n
0-5V should be connected
with 330k resistors
Vctrl
TL074
U6C
R31
33k
R32
1k
Q7
Q8
Q9
Q2
Q3
Q4
R13
6.8k
R14
6.8k
Iout2
Iout1
-12V
R16
12k
U5A
LM13700
U5B
LM13700
C8
2.2u
R17
18k
Vin1
R19
560
R18
560
RV2
50k
R20
5.6k
R21
100k
C9
2.2u
tune for unity gain
R29
1k
R28
1k
R30
1k
TL074
U6D
Vout
R24
12k
U5C
LM13700
U5D
LM13700
C10
2.2u
R22
18k
Vin2
R23
560
R25
560
RV3
50k
R26
5.6k
R27
100k
C11
2.2u
tune for unity gain
+12V
V+
11
6
V-
-12V
Sheet: /DryWet Mixer/
File: linkedMixer.kicad_sch
Title:
Size: A4
Date:
Rev:
KiCad E.D.A. 10.0.0
Id: 3/3

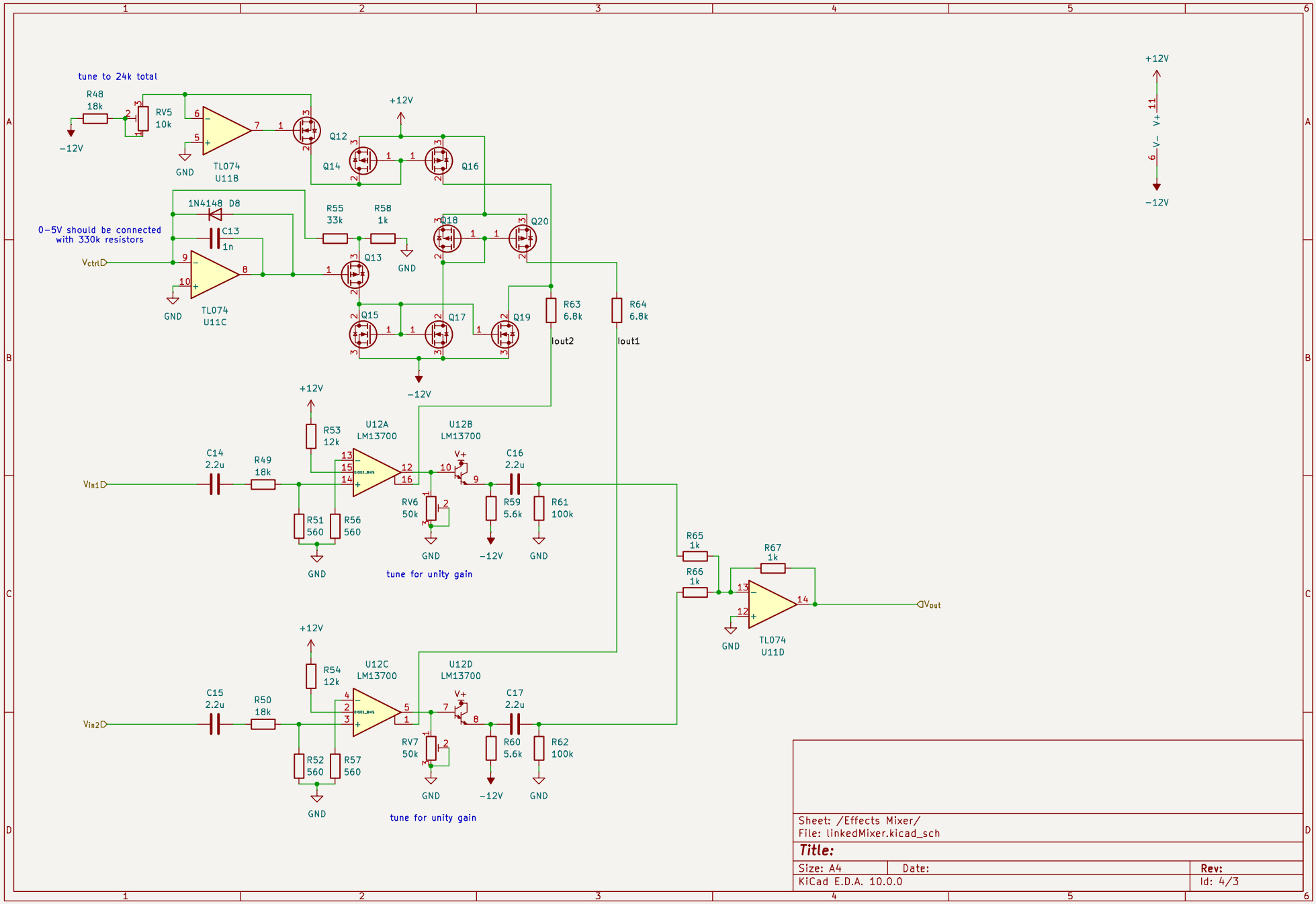

Sheet: /Effects Mixer/
File: linkedMixer.kicad_sch

Title:

Size: A4	Date:	Rev:
KiCad E.D.A. 10.0.0		Id: 4/3