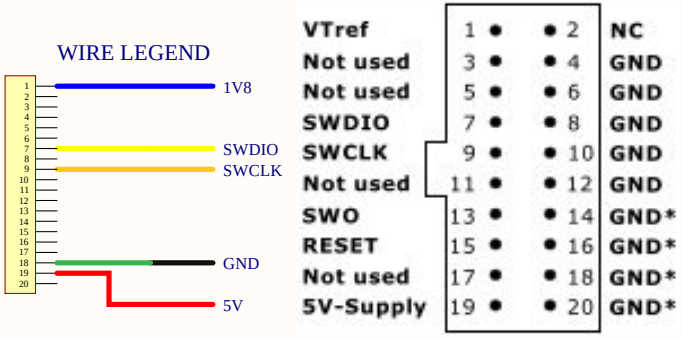


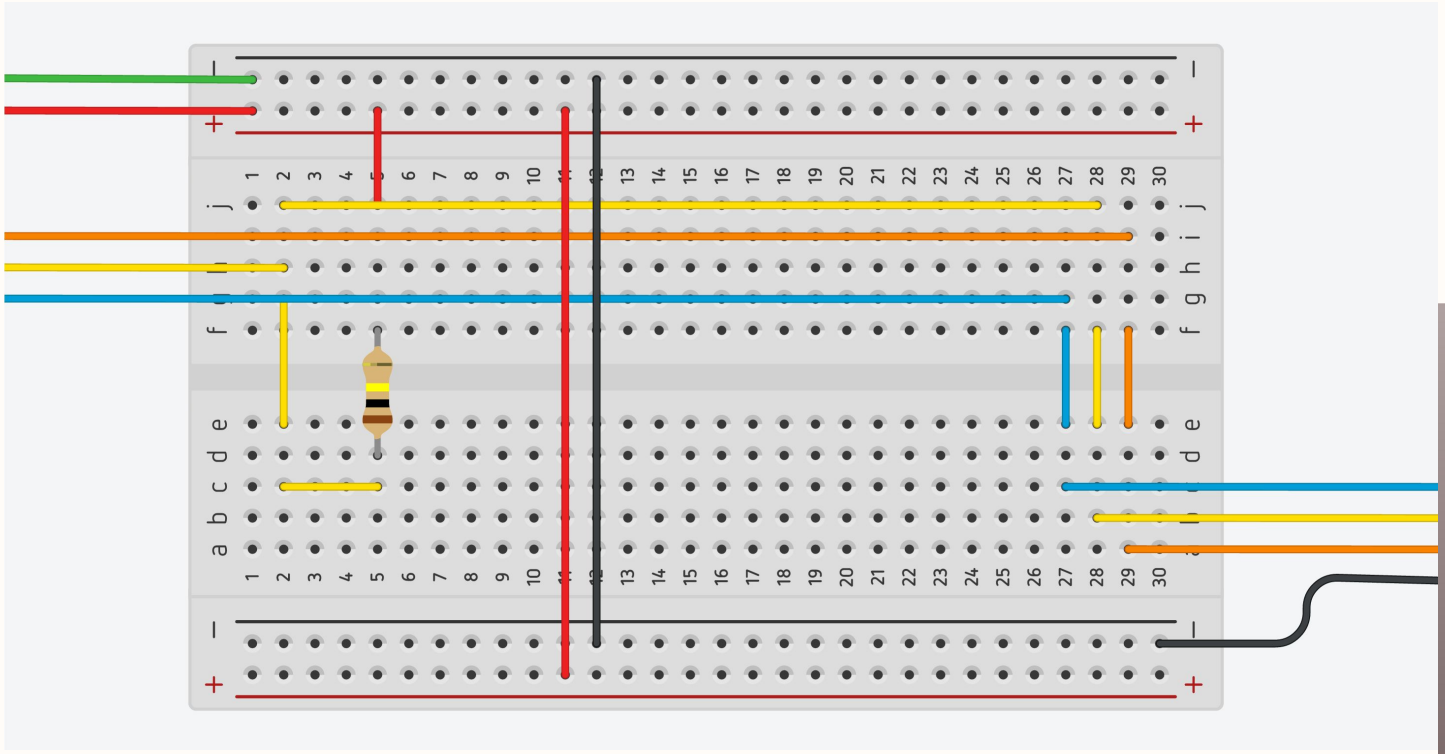

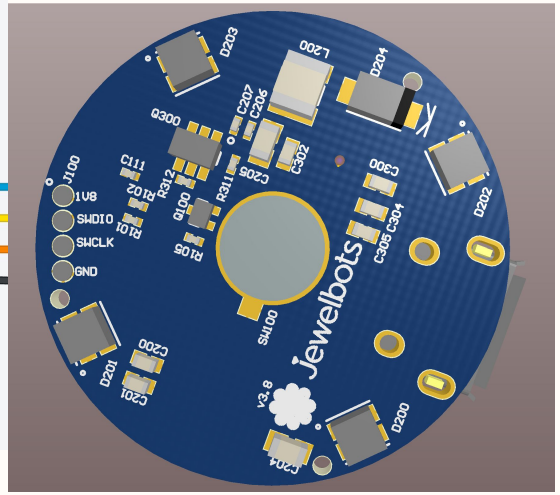


100K PULLUP RESISTOR

| | | |
|---|---|---|
| Title: Programming Schematic | | Jewelbots |
| Size: C | Number: * | Revision: 1.0 |
| Date: 6/9/2016 | | Sheet * of * |
| File: C:\Users\...\Programming.SchDoc | | Drawn By: Sangeet Dandona |