Revision			
Rev.	Description	Date	By
v1.0	Initial Release	3/3/2015	JJD
v2.0	Reduced board size & LED number	5/13/2015	JJD

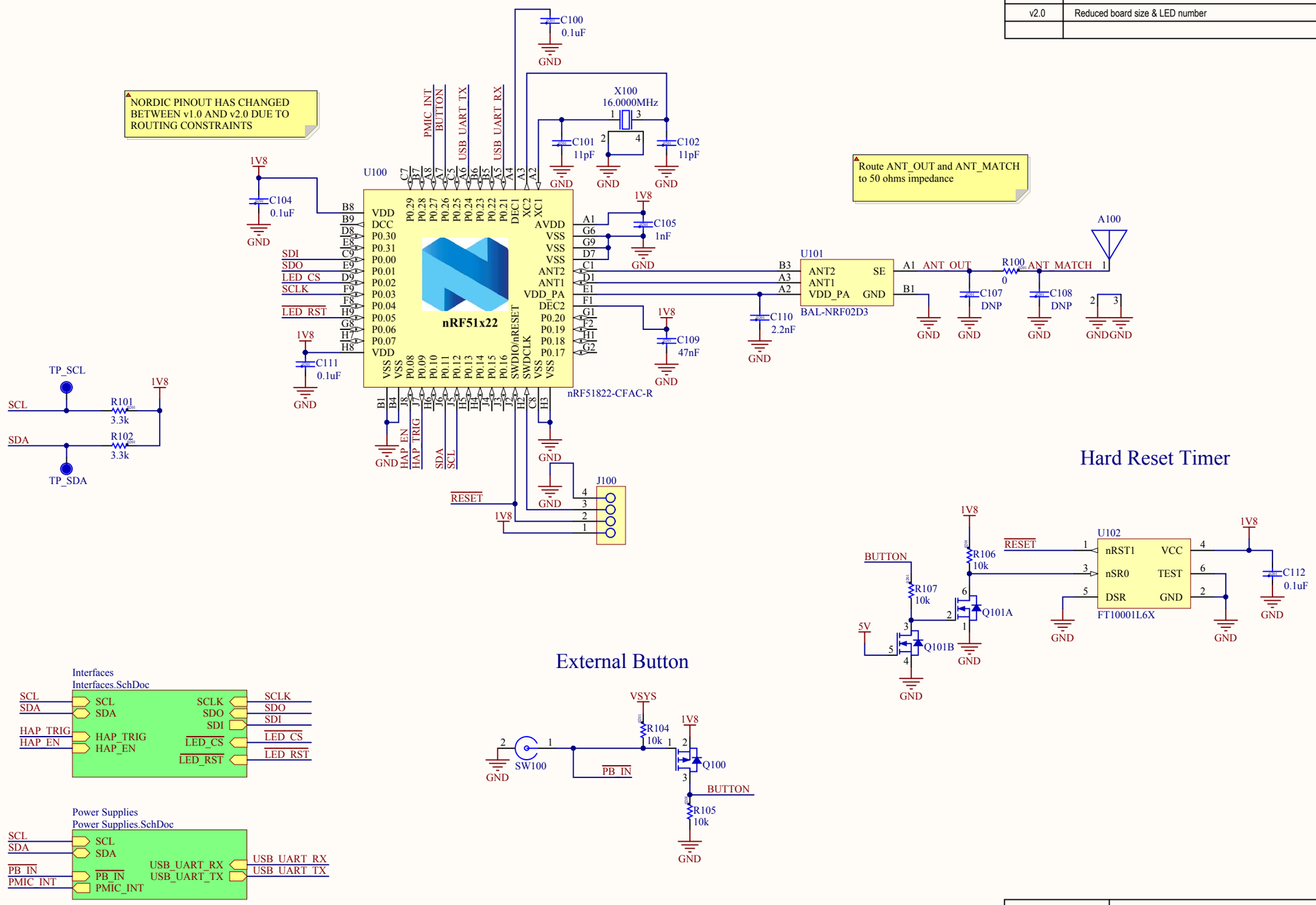

Prepared By RiGAD	Project: JWB-001	Board: JWB-001_Main	Revision: v2.0
	Client: JewlieBOTS	More info: http://jewliebots.com/	
Author: JJD	Document title: Top Nordic	Top Nordic.SchDoc	Page: 1 / 3
Sheet Size: B	Last modified: 5/13/2015	Timestamp: 4:36:55 PM 5/13/2015	

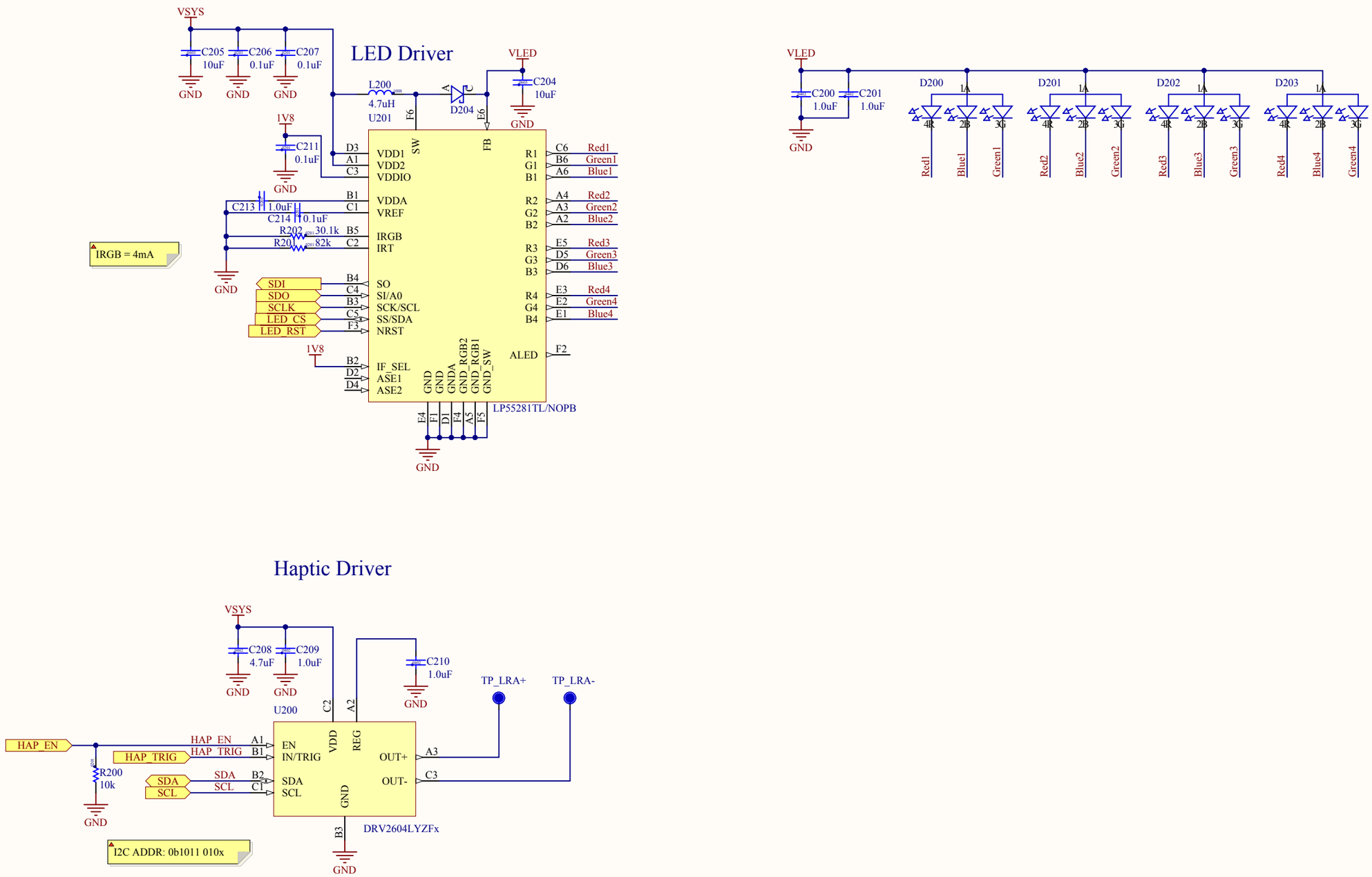

Project: JWB-001	Board: JWB-001_Main	Revision: v2.0
Document title: LED Driver	Interfaces.SchDoc	Page: 2 / 3
Last modified: 5/13/2015	Timestamp: 4:36:55 PM 5/13/2015	

Battery PMIC

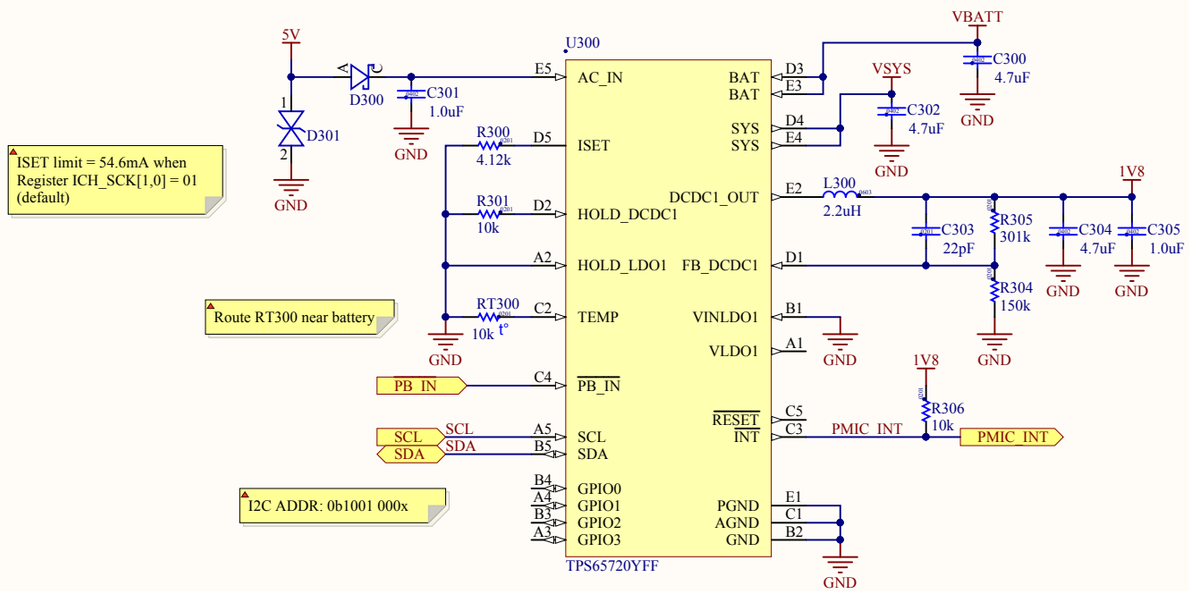

Battery Protection

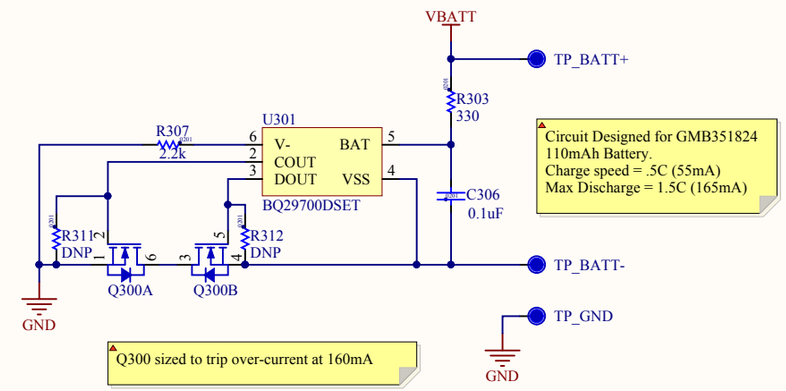

Charger Header

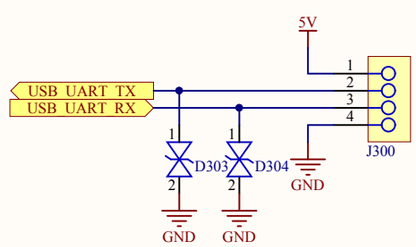

Project: JWB-001	Board: JWB-001_Main	Revision: v2.0
Document title: LED Driver	Power Supplies.SchDoc	Page: 3 / 3
Last modified: 5/13/2015	Timestamp: 4:36:56 PM 5/13/2015	