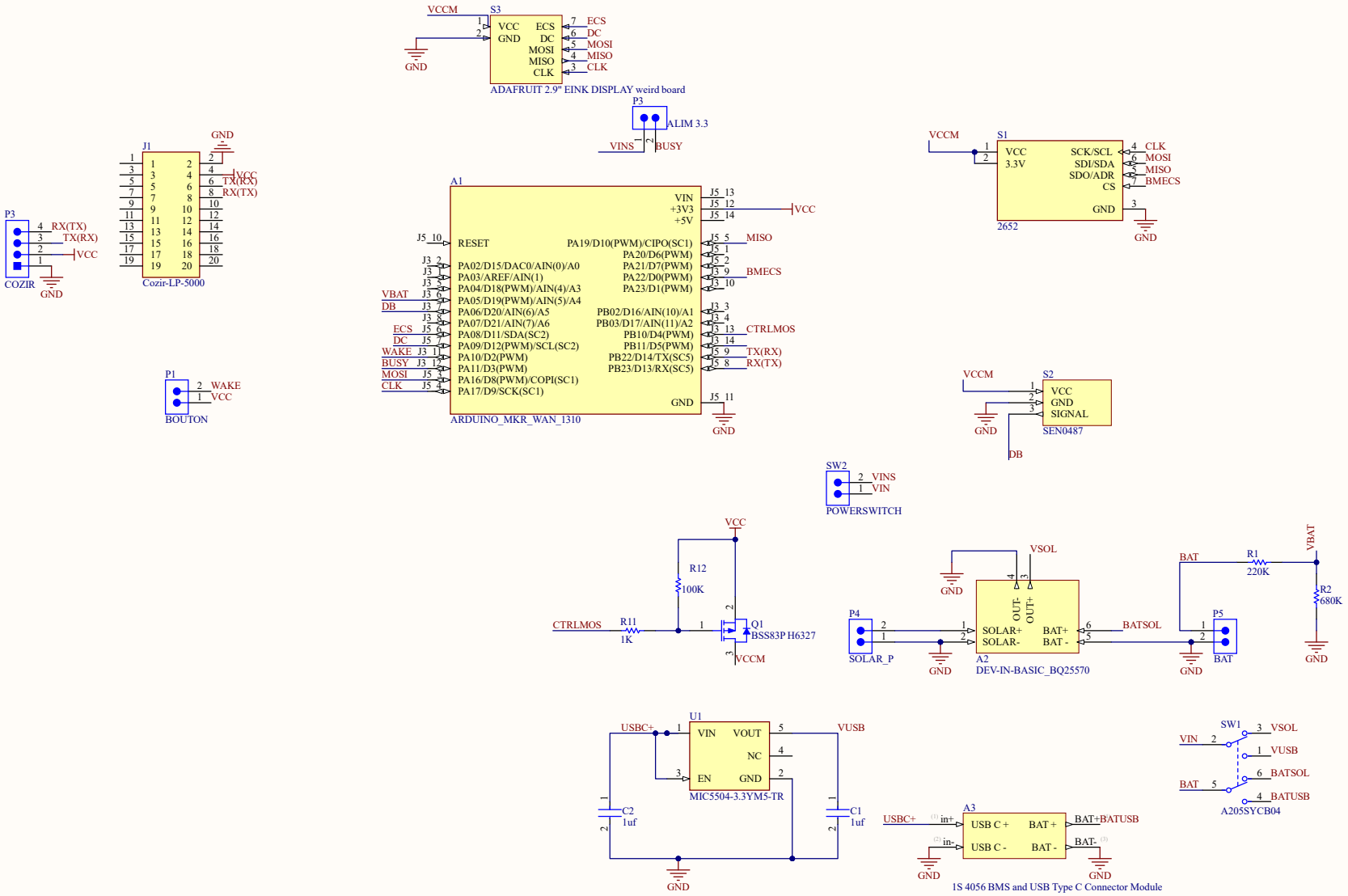

Title		
Size A3	Number	Revision
Date: 5/11/2023		Sheet of
File: C:\Users\..\p1_PCB_capteurs.SchDoc		Drawn By: