MSM8937 Control & EBI

REVISION RECORD			
LTR	ECO NO:	APPROVED:	DATE:

TP407 TP_1.0 — UART_MSM_RX — [1,3]

TP408 TP_1.0 — UART_MSM_TX — [1,3]

TP409 TP_1.0 — R426 R0201_1K — VREG_L5_1P8 — [1,3,4,7,8,9,12,13,20,21,22,23,26,30,33]

TP410 TP_1.0 — BOOT — R406 R0201_10K — FORCE_USB_BOOT — [3]

J401 LS_DF17NB-16DS-0.4V(51)

[1,3]	UART_MSM_TX	2	UART_MSM_RX [1,3]
[3]	HW_ID1	4	JTAG_TRST_N [1]
		6	JTAG_TMS [1]
		8	
[1]	JTAG_TDO	10	JTAG_TCK [1]
[1]	JTAG_TDI	12	HW_ID2 [3]
[3]	GPIO3_WATCHDOG_DISABLE	14	JTAG_SRST_N [1]
		16	

17, 18

R470 R0201_NC

VREG_L5_1P8 [1,3,4,7,8,9,12,13,20,21,22,23,26,30,33]

U401-A

MSM8937

R0201_1M R401

CONTROL

[33]	CLK_OUT	BD13	WCSS_XO
[10]	BBCLK1	AA40	CXO
[10]	MSM_BBCLK1_EN	W40	CXO_EN
[10]	SLEEP_CLK	AR40	SLEEP_CLK
[9,10]	PM_PON_RESET_N	AH37	RESIN_N
[7]	MSM_RESOUT_N	BA4	RESOUT_N
		T37	MODE_0
		U38	MODE_1
[10]	MSM_PS_HOLD	Y39	PS_HOLD
[1]	JTAG_SRST_N	Y3	SRST_N
[1]	JTAG_TCK	AB3	TCK
[1]	JTAG_TDI	AB1	TDI
[1]	JTAG_TDO	Y1	TDO
[1]	JTAG_TMS	AC2	TMS
[1]	JTAG_TRST_N	AA2	TRST_N
[7,10]	VREF_LPDDR3	G14	EBI_VREF
		R2	DNC
		R40	DNC
		T39	DNC

C410 C0201_22NF — 22nF change to 47nf

C402 C0201_100NF_6.3V_K

SDC1_RCLK	L38	R408 R0201_24R	SDC1_RCLK [7]
SDC1_CLK	G38	SDC1_CLK_1	SDC1_CLK [7]
SDC1_CMD	H39		SDC1_CMD [7]
SDC1_DATA_0	G40		SDC1_DATA_0 [7]
SDC1_DATA_1	H37		SDC1_DATA_1 [7]
SDC1_DATA_2	E38		SDC1_DATA_2 [7]
SDC1_DATA_3	J40		SDC1_DATA_3 [7]
SDC1_DATA_4	F37		SDC1_DATA_4 [7]
SDC1_DATA_5	F39		SDC1_DATA_5 [7]
SDC1_DATA_6	J38		SDC1_DATA_6 [7]
SDC1_DATA_7	K37		SDC1_DATA_7 [7]
SDC2_CLK	W4	SDC2_CLK_1 R407 R0201_33R	SDC2_SDCARD_CLK [20]
SDC2_CMD	U4		SDC2_SDCARD_CMD [20]
SDC2_DATA_0	W2		SDC2_SDCARD_D0 [20]
SDC2_DATA_1	V1		SDC2_SDCARD_D1 [20]
SDC2_DATA_2	V3		SDC2_SDCARD_D2 [20]
SDC2_DATA_3	U2		SDC2_SDCARD_D3 [20]
USB_HS_DM	AE40	R0201_2.2R L410	USB_HS_D_M [17]
USB_HS_DP	AD39	R0201_2.2R L411	USB_HS_D_P [17]
USB_HS_ID	AB39		
USB_HS_REXT	AC38	R410 R0201_200R_F	
USB_HS_VBUS	AC40		
SPMI_CLK	AH39		SPMI_CLK [9,10]
SPMI_DATA	AG40		SPMI_DATA [9,10]
MIPI_DSI_DCDC	AF9		

C403 C0201_NC — C404 C0201_NC

L0603-2.2UH L401 — VDDA_0P4_MIPI_DSI_REG [5]

C405 C0402_2.2UF

LS_MSM8937

U401-B

MSM8937

EBI0

[7]	EBI0_CS0_N	C4	EBI0_CS_N_0
[7]	EBI0_CS1_N	D3	EBI0_CS_N_1
[7]	EBI0_CLK_C	G10	EBI0_CKB
[7]	EBI0_CLK_T	E10	EBI0_CK
[7]	EBI0_CKE0	C2	EBI0_CKE_0
[7]	EBI0_CKE1	D1	EBI0_CKE_1
	EBI0_DM0	C22	EBI0_DM_0
	EBI0_DM1	C26	EBI0_DM_1
	EBI0_DM2	D15	EBI0_DM_2
	EBI0_DM3	C34	EBI0_DM_3
[7]	EBI0_DQS0_C	F21	EBI0_DQSB_0
[7]	EBI0_DQS0_T	E20	EBI0_DQS_0
[7]	EBI0_DQS1_C	D25	EBI0_DQSB_1
[7]	EBI0_DQS1_T	F25	EBI0_DQS_1
[7]	EBI0_DQS2_C	E16	EBI0_DQSB_2
[7]	EBI0_DQS2_T	F17	EBI0_DQS_2
[7]	EBI0_DQS3_C	E32	EBI0_DQSB_3
[7]	EBI0_DQS3_T	G32	EBI0_DQS_3
	EBI0_CA0	A4	EBI0_CA_0
	EBI0_CA1	B5	EBI0_CA_1
	EBI0_CA2	B3	EBI0_CA_2
	EBI0_CA3	E6	EBI0_CA_3
	EBI0_CA4	D5	EBI0_CA_4
	EBI0_CA5	E4	EBI0_CA_5
	EBI0_CA6	F3	EBI0_CA_6
	EBI0_CA7	F1	EBI0_CA_7
	EBI0_CA8	E2	EBI0_CA_8
	EBI0_CA9	G4	EBI0_CA_9

EBI0_DQ_0	A16		EBI0_DQ0
EBI0_DQ_1	C16		EBI0_DQ1
EBI0_DQ_2	A18		EBI0_DQ2
EBI0_DQ_3	C18		EBI0_DQ3
EBI0_DQ_4	A20		EBI0_DQ4
EBI0_DQ_5	D19		EBI0_DQ5
EBI0_DQ_6	A22		EBI0_DQ6
EBI0_DQ_7	A24		EBI0_DQ7
EBI0_DQ_8	A26		EBI0_DQ8
EBI0_DQ_9	A28		EBI0_DQ9
EBI0_DQ_10	C28		EBI0_DQ10
EBI0_DQ_11	A30		EBI0_DQ11
EBI0_DQ_12	C30		EBI0_DQ12
EBI0_DQ_13	D31		EBI0_DQ13
EBI0_DQ_14	A32		EBI0_DQ14
EBI0_DQ_15	A34		EBI0_DQ15
EBI0_DQ_16	A8		EBI0_DQ16
EBI0_DQ_17	A6		EBI0_DQ17
EBI0_DQ_18	C8		EBI0_DQ18
EBI0_DQ_19	A10		EBI0_DQ19
EBI0_DQ_20	A12		EBI0_DQ20
EBI0_DQ_21	C10		EBI0_DQ21
EBI0_DQ_22	A14		EBI0_DQ22
EBI0_DQ_23	C12		EBI0_DQ23
EBI0_DQ_24	C36		EBI0_DQ24
EBI0_DQ_25	A36		EBI0_DQ25
EBI0_DQ_26	D39		EBI0_DQ26
EBI0_DQ_27	C38		EBI0_DQ27
EBI0_DQ_28	A38		EBI0_DQ28
EBI0_DQ_29	E40		EBI0_DQ29
EBI0_DQ_30	C40		EBI0_DQ30
EBI0_DQ_31	B39		EBI0_DQ31

EBI0_CAL G18 — EBI_CAL_REXT — R411 R0201_240R_F

COMPANY:	HQ	
TITLE:	D52_MB_SCH_V1.0_161110	
DRAWN: Jimmy(BB), Yue Peng(RF)	DATED: 2016/10/06	
CHECKED: Yang Junli(BB),Zhang Ruofeng(RF)	DATED: 2016/10/10	
QUALITY CONTROL:	DATED:	
RELEASED:	DATED:	
CODE:	SIZE: D	DRAWING NO: 1
REV: V1.0		
SCALE:	SHEET: 4 OF 38	

REVISION RECORD			
LTR	ECO NO:	APPROVED:	DATE:

MSM8937 MIPI and RF Control

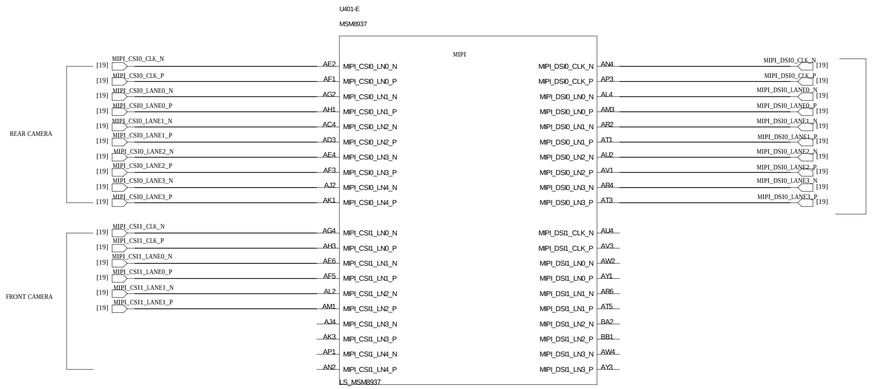

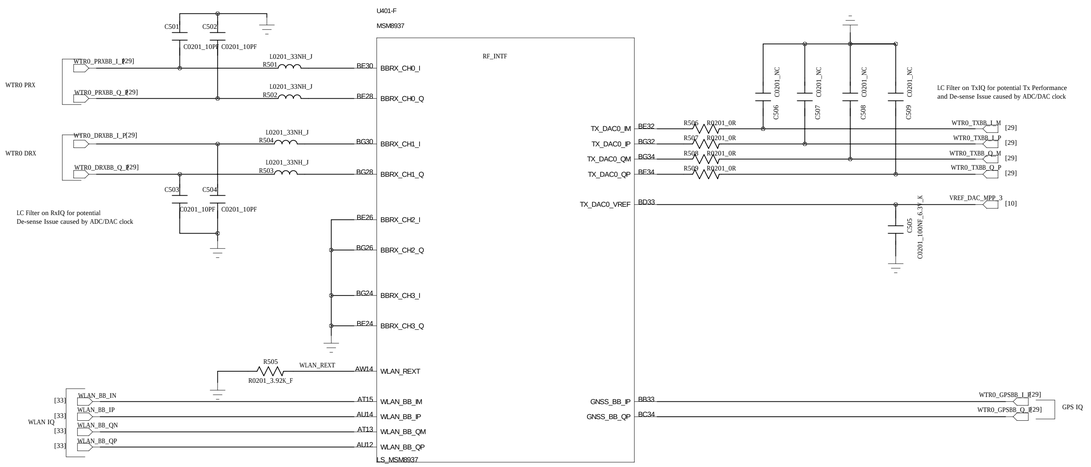

DRAWN: Jimmy(BB), Yue Peng(RF)	DATED: 2016/10/06	COMPANY: HQ			
CHECKED: Yang Junli(BB),Zhang Ruofeng(RF)	DATED: 2016/10/10	TITLE: D52_MB_SCH_V1.0_161110			
QUALITY CONTROL:	DATED:	CODE:	SIZE: D	DRAWING NO:	REV: V1.0
RELEASED:	DATED:	SCALE:	SHEET: 5 OF 38		

MSM8937 GPIO

Note: Asterisks (*) indicate modem power management (MPM) wake-up pins

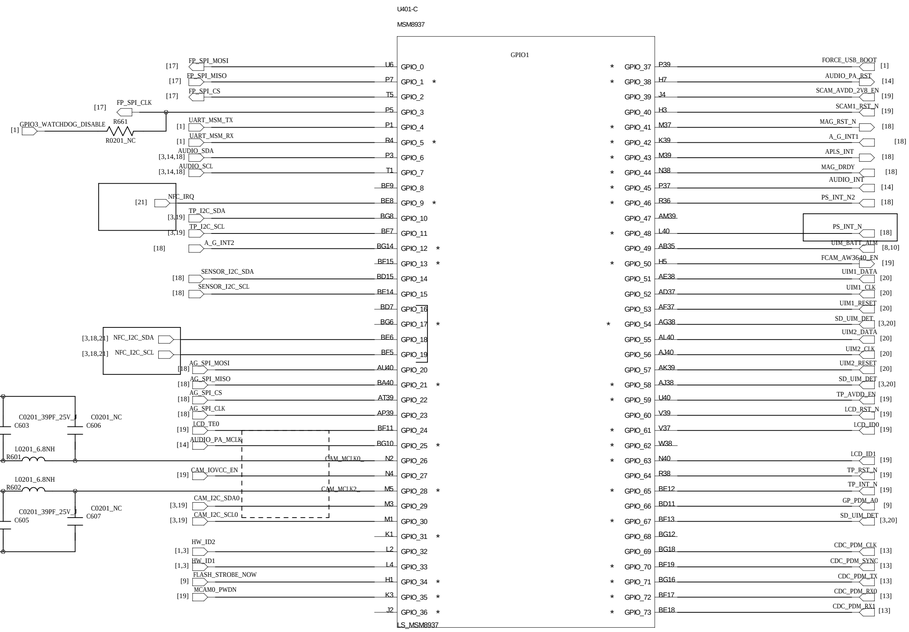

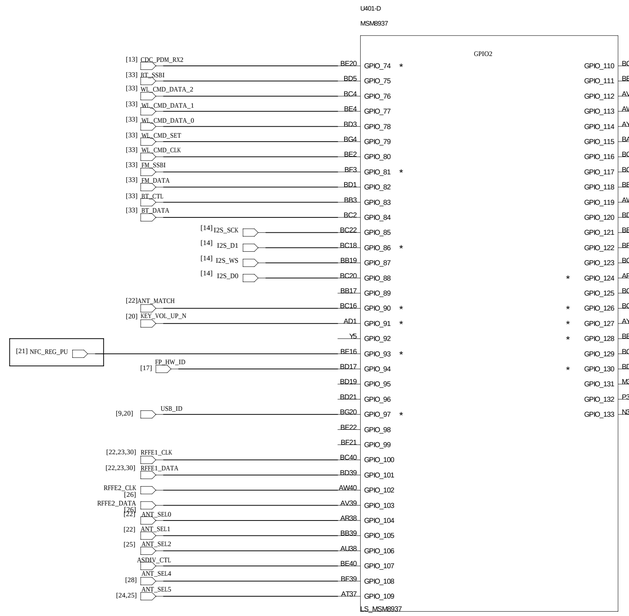

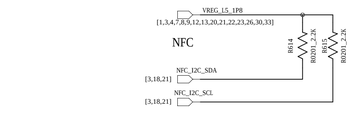

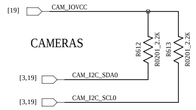

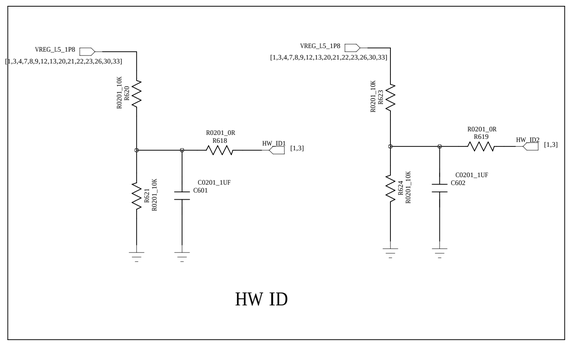

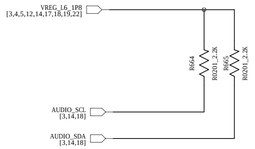

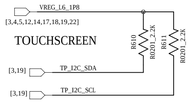

REVISION RECORD			
LTR	ECO NO:	APPROVED:	DATE:

COMPANY:	HQ		
TITLE:	D52_MB_SCH_V1.0_161110		
DRAWN: Jimmy(BB), Yue Peng(RF)	DATED: 2016/10/06		
CHECKED: Yang Junli(BB),Zhang Ruofeng(RF)	DATED: 2016/10/10		
QUALITY CONTROL:	DATED:		
RELEASED:	DATED:		
CODE:	SIZE: D	DRAWING NO:	REV: V1.0
SCALE:	SHEET: 6 OF 38		

MSM8937 POWER1

REVISION RECORD			
ITR	ECO NO:	APPROVED:	DATE:

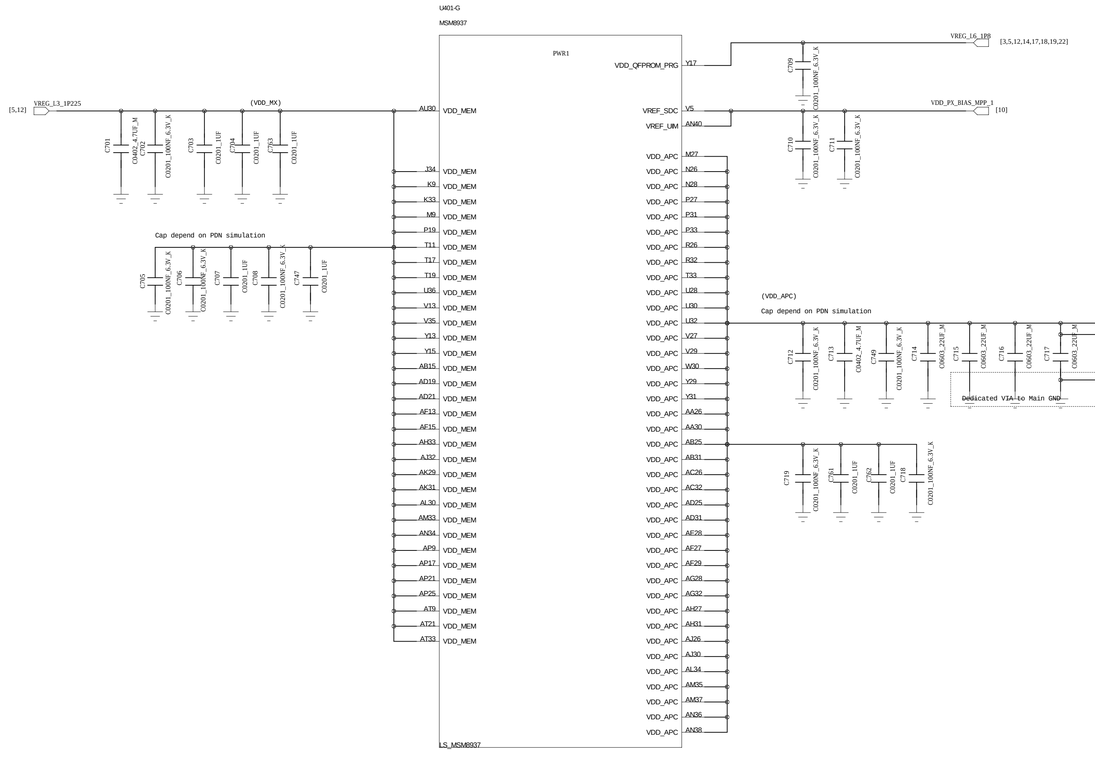

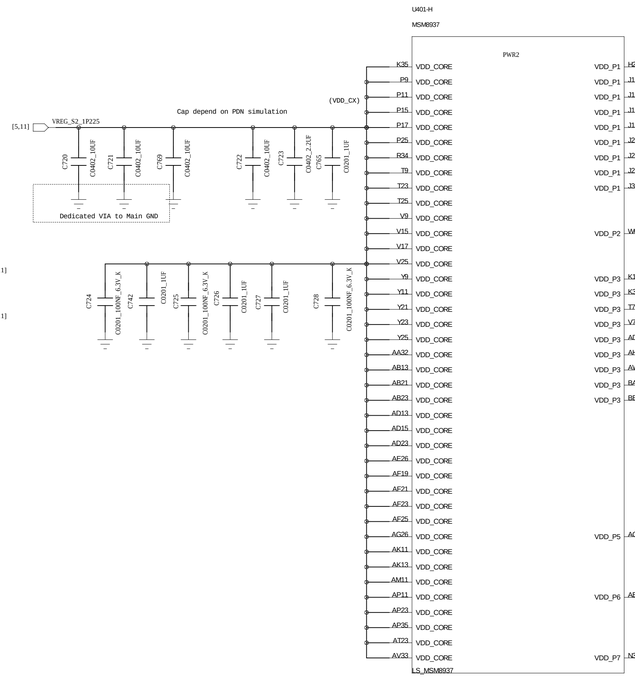

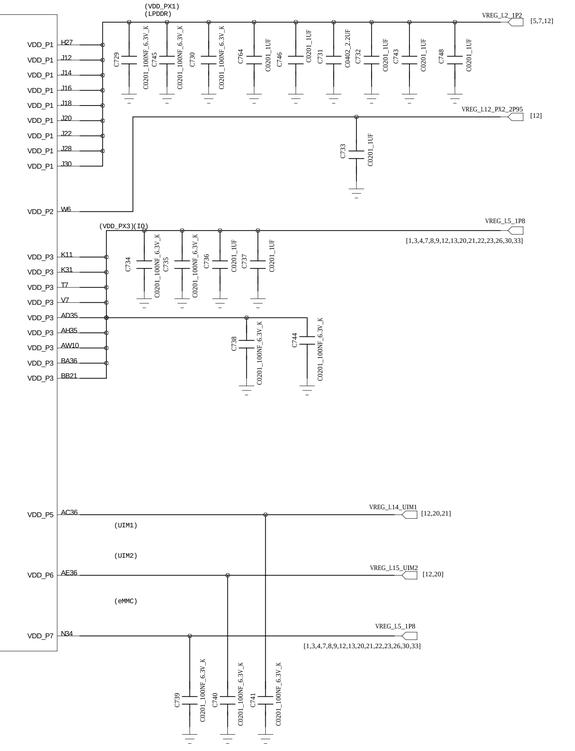

COMPANY: HQ					
TITLE: D52_MB_SCH_V1.0_161110					
DRAWN: Jimmy(BB), Yue Peng(RF)	DATED: 2016/10/06				
CHECKED: Yang Junli(BB),Zhang Ruofeng(RF)	DATED: 2016/10/10	CODE:	SIZE: D	DRAWING NO:	REV: V1.0
QUALITY CONTROL:	DATED:				
RELEASED:	DATED:	SCALE:		SHEET: 7 OF 38	

REVISION RECORD			
LTR	ECO NO:	APPROVED:	DATE:

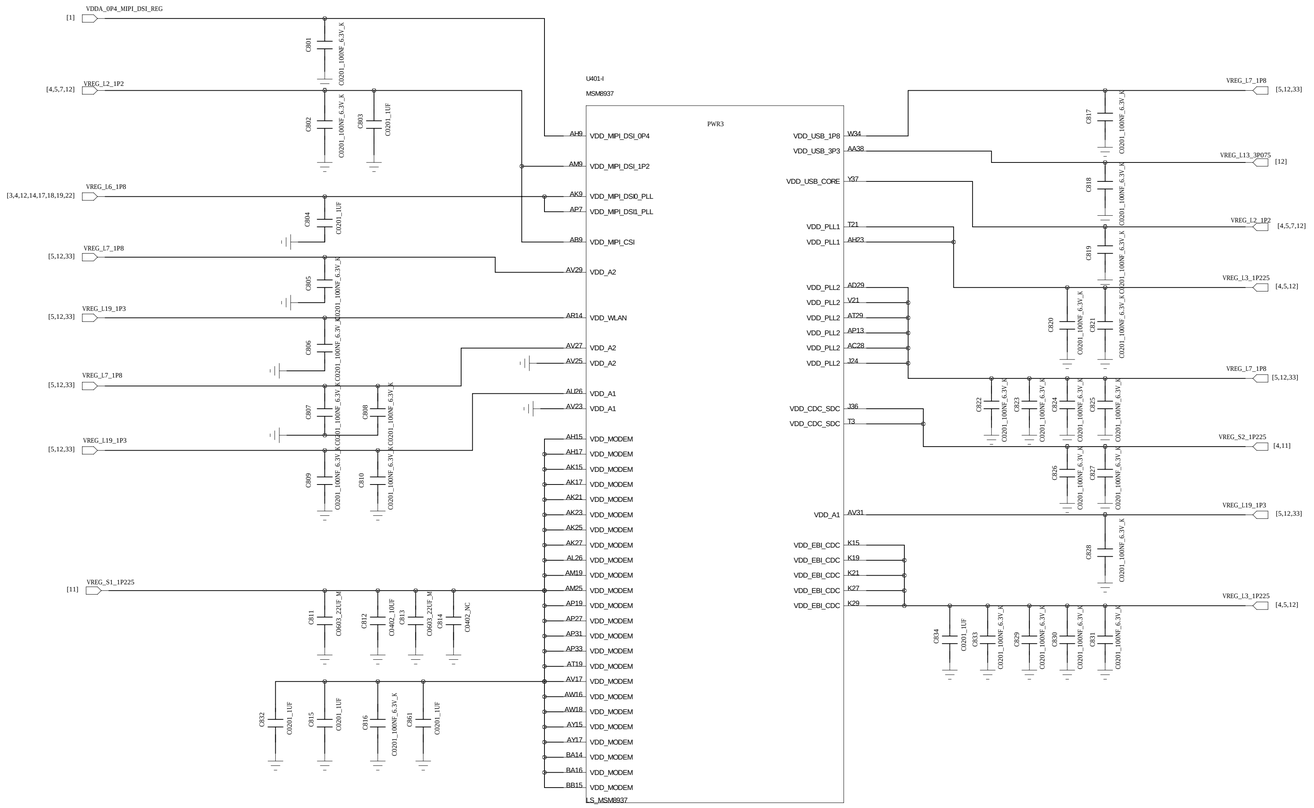

DRAWN: Jimmy(BB), Yue Peng(RF)	DATED: 2016/10/06	COMPANY: HQ	
CHECKED: Yang Junli(BB),Zhang Ruofeng(RF)	DATED: 2016/10/10	TITLE: D52_MB_SCH_V1.0_161110	
QUALITY CONTROL:	DATED:	CODE:	SIZE: D / DRAWING NO: / REV: V1.0
RELEASED:	DATED:	SCALE:	SHEET: 8 OF 38

REVISION RECORD			
LTR	ECO NO:	APPROVED:	DATE:

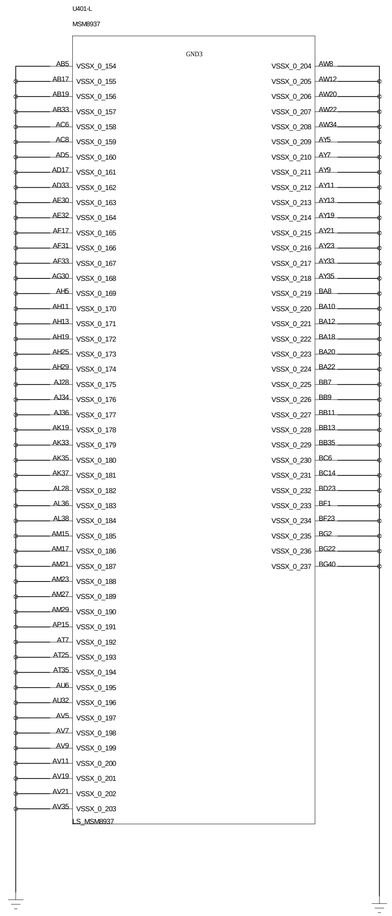

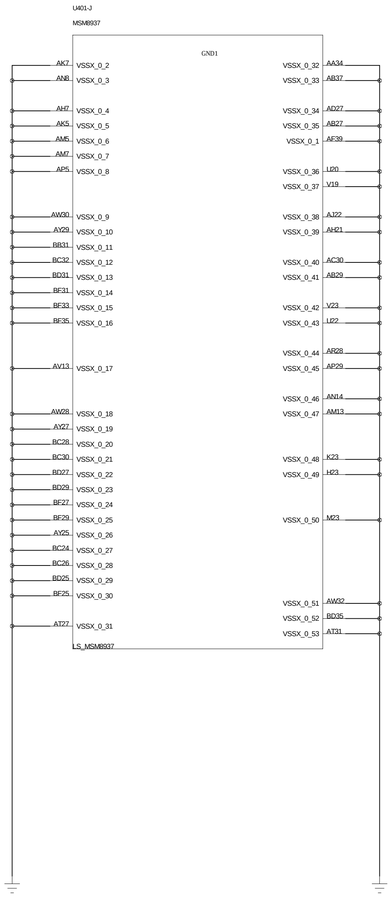

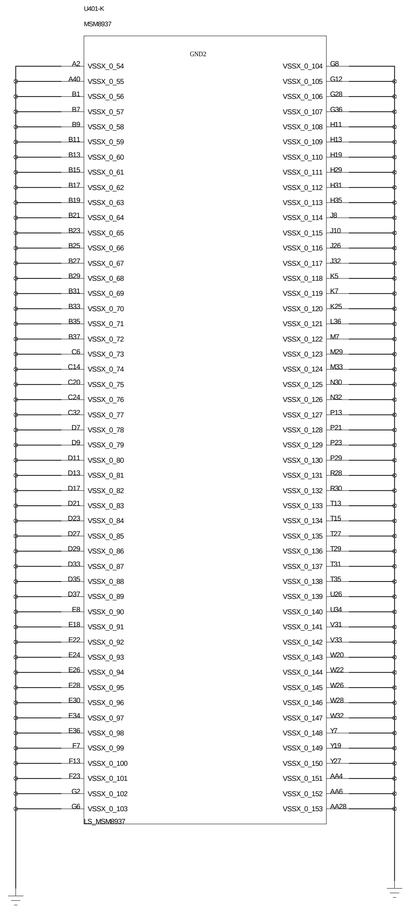

COMPANY:	HQ		
TITLE:	D52_MB_SCH_V1.0_161110		
DRAWN: Jimmy(BB), Yue Peng(RF)	DATED: 2016/10/06		
CHECKED: Yang Junli(BB),Zhang Ruofeng(RF)	DATED: 2016/10/10	CODE:	SIZE: D / DRAWING NO: / REV: V1.0
QUALITY CONTROL:	DATED:		
RELEASED:	DATED:	SCALE:	SHEET: 9 OF 38

MEMORY:LPDDR3+EMMC

REVISION RECORD			
LTR	ECO NO:	APPROVED:	DATE:

MCP_16GB-eMMC_16Gb-LPDDR3

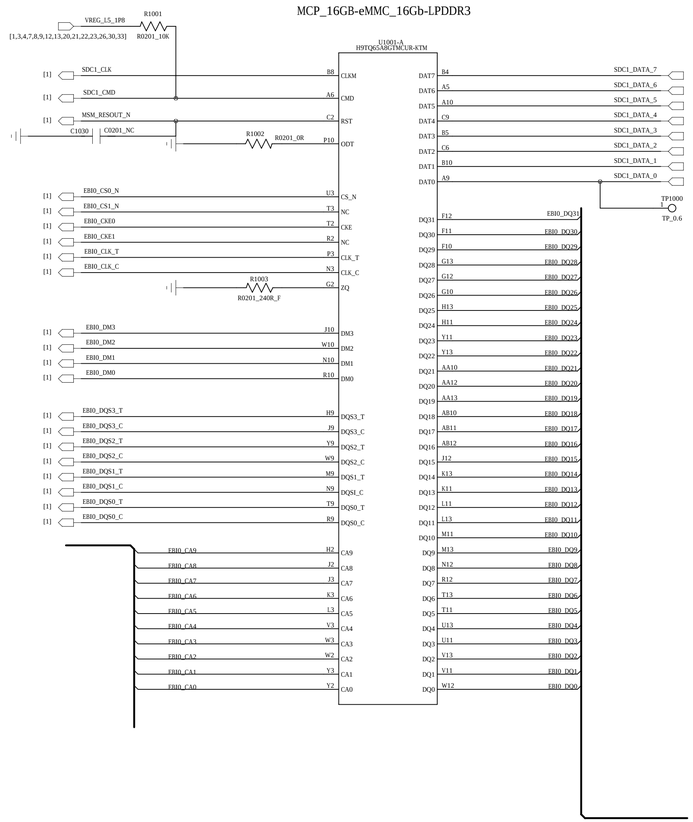

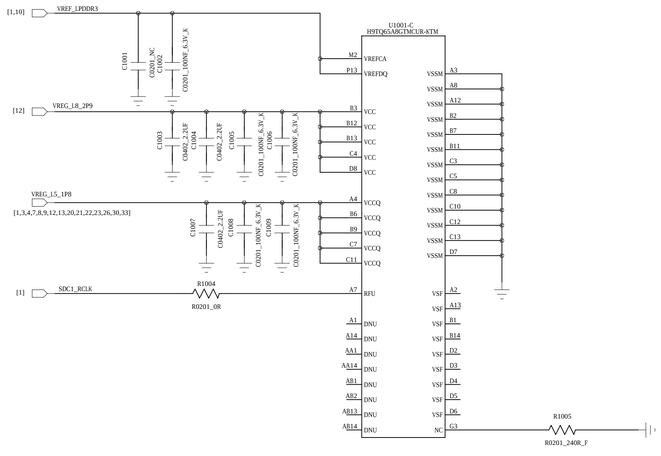

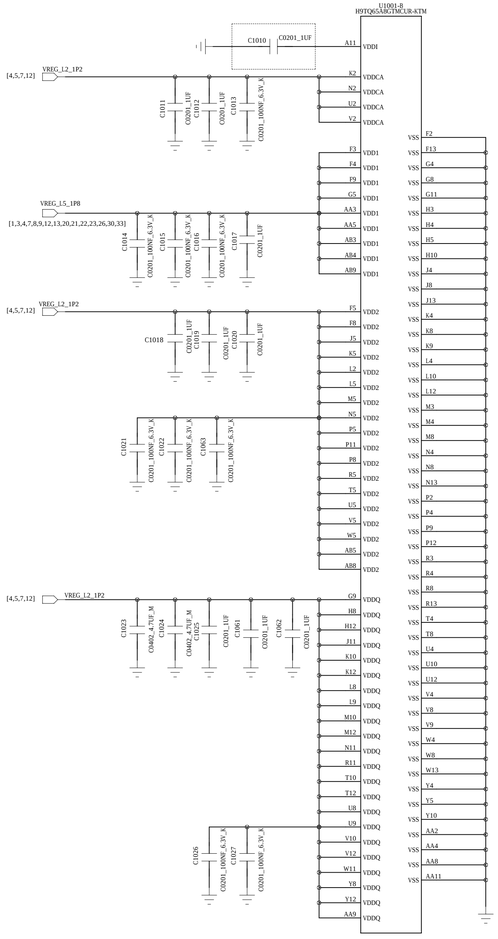

COMPANY:	HQ		
TITLE:	D52_MB_SCH_V1.0_161110		
DRAWN: Jimmy(BB), Yue Peng(RF)	DATED: 2016/10/06	CODE:	SIZE: D
CHECKED: Yang Junli(BB),Zhang Ruofeng(RF)	DATED: 2016/10/10	DRAWING NO:	REV: V1.0
QUALITY CONTROL:	DATED:	SCALE:	SHEET: 10 OF 38
RELEASED:	DATED:		

REVISSION RECORD			
LTR	ECO NO:	APPROVED:	DATE:

12: PMI8952_CHARGE

PMI PIN	Connection on device without Wipower	Connection on device with Wipower
DVI2_EN	Pull down to GND with 0ohm	CONNECT TO WiPOWER MODE PIN
CHG_OK	Pull up to VDD_CAP with 51kohm	CONNECT TO WiPOWER CHOKE PIN
GPIO2	Hi-Z	10K PD TO GND

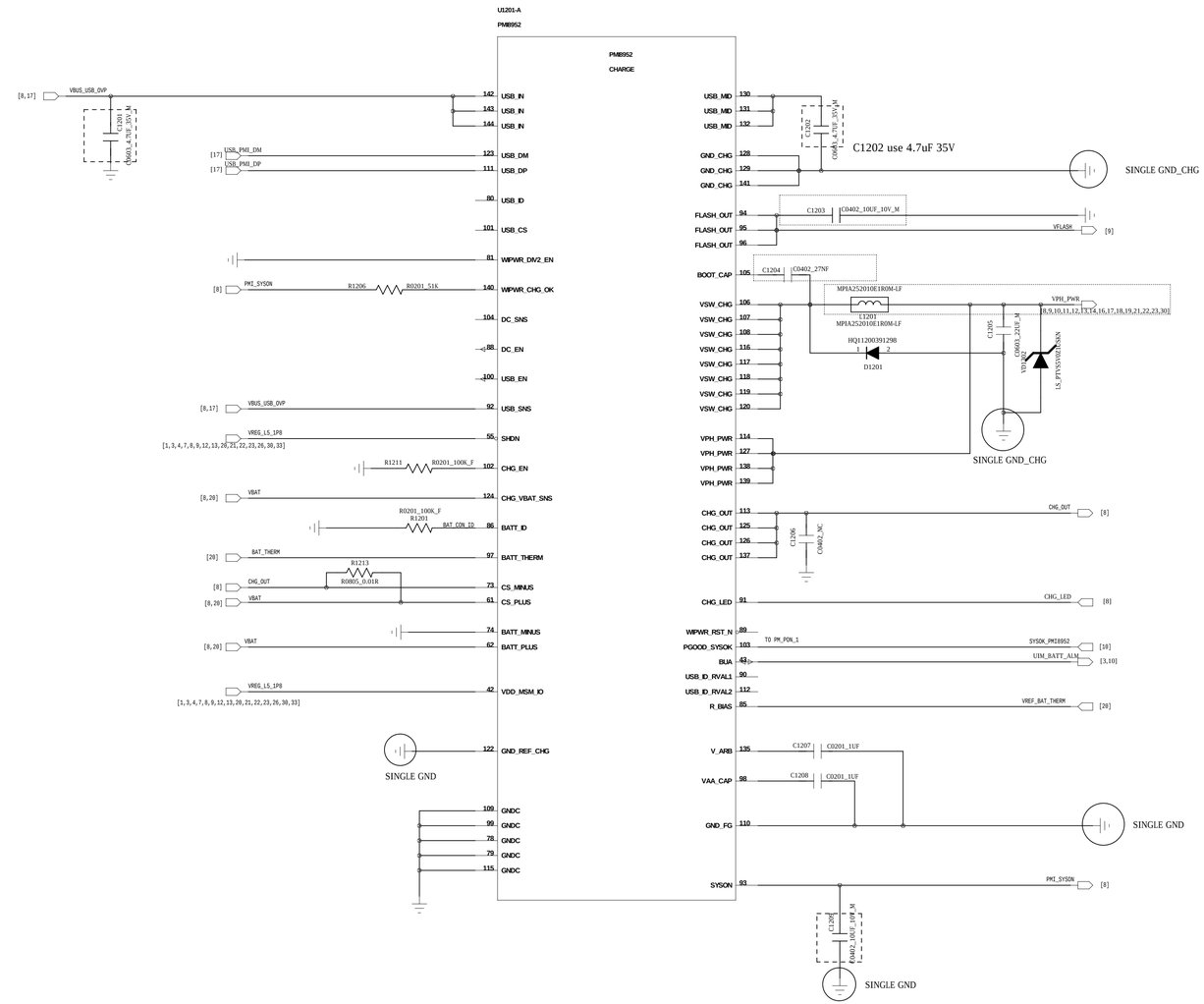

Charger LED

DRAWN: Jimmy(BB), Yue Peng(RF)	DATED: 2016/10/06	COMPANY: HQ	
CHECKED: Yang Junli(BB),Zhang Ruofeng(RF)	DATED: 2016/10/10	TITLE: D52_MB_SCH_V1.0_161110	
QUALITY CONTROL:	DATED:	CODE:	SIZE: D / DRAWING NO: / REV: V1.0
RELEASED:	DATED:	SCALE:	SHEET: 12 OF 38

REVISION RECORD			
LTR	ECO NO:	APPROVED:	DATE:

13: PMI8952_CONTROL

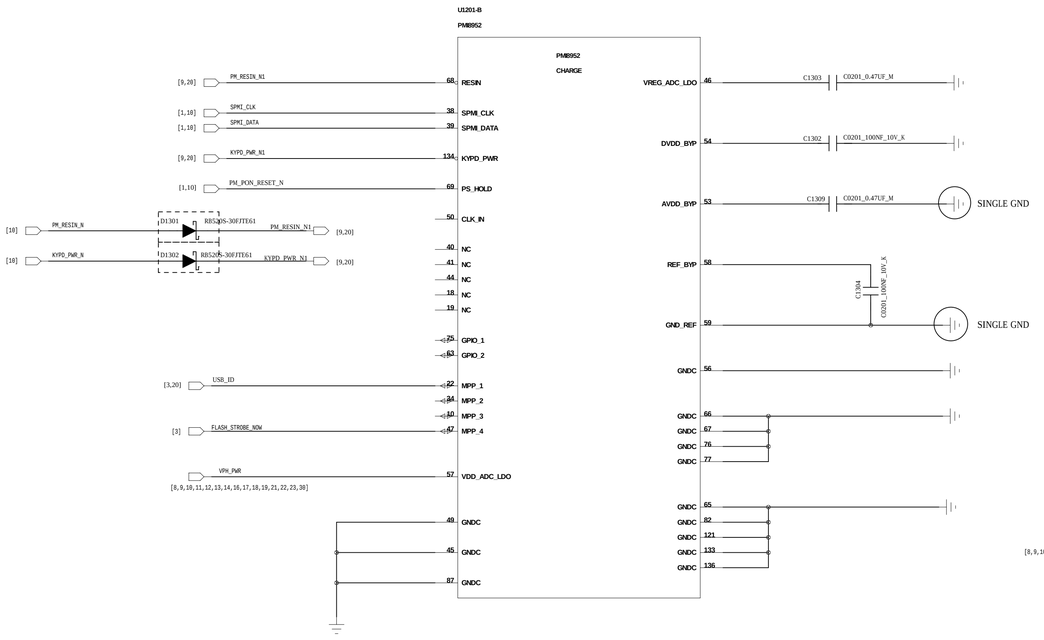

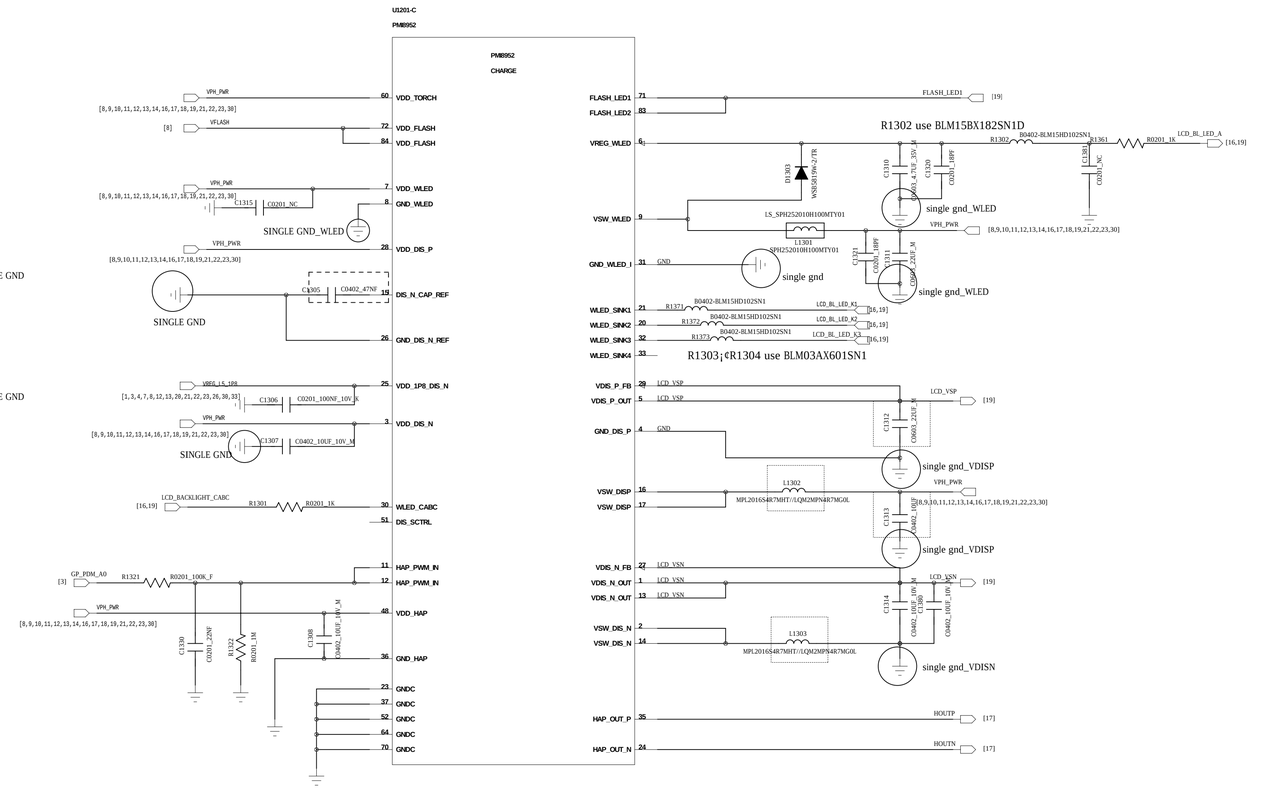

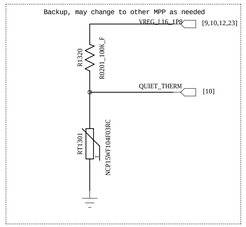

RT1301 is for CPU surface temperature detect

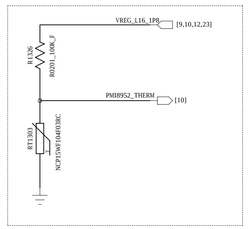

RT1303 is used for PMI surface temperature detect

PMI8952 INTERFACE

COMPANY: HQ			
TITLE: D52_MB_SCH_V1.0_161110			
DRAWN: Jimmy(BB), Yue Peng(RF)	DATED: 2016/10/06		
CHECKED: Yang Junli(BB),Zhang Ruofeng(RF)	DATED: 2016/10/10	CODE:	SIZE: D
QUALITY CONTROL:	DATED:	DRAWING NO:	REV: V1.0
RELEASED:	DATED:	SCALE:	SHEET: 13 OF 38

PM8937 Control and MPP/Clock

REVISION RECORD			
LTR	ECO NO:	APPROVED:	DATE:

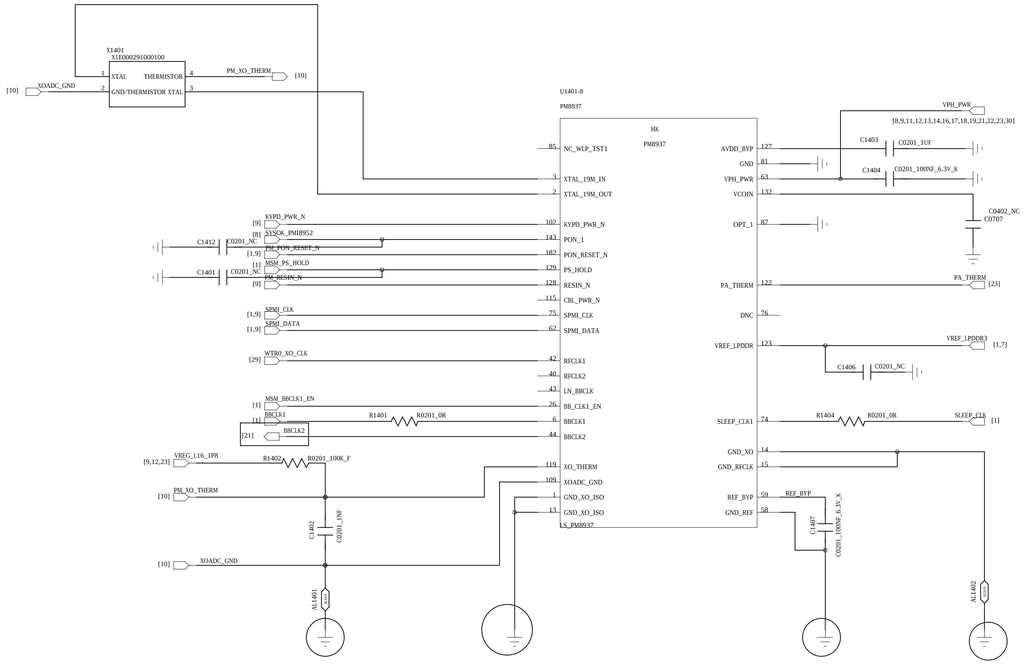

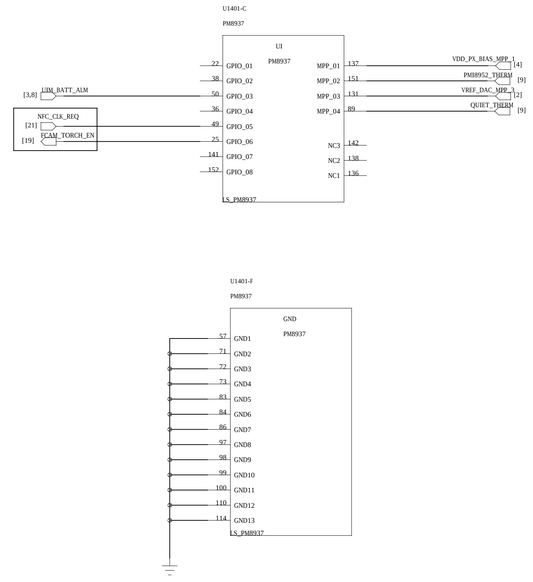

COMPANY:	HQ
TITLE:	D52_MB_SCH_V1.0_161110
DRAWN: Jimmy(BB), Yue Peng(RF)	DATED: 2016/10/06
CHECKED: Yang Junli(BB),Zhang Ruofeng(RF)	DATED: 2016/10/10
QUALITY CONTROL:	DATED:
RELEASED:	DATED:

CODE:	SIZE:	DRAWING NO:	REV:
	D		V1.0

SCALE: | SHEET: 14 OF 38

PM8937 Buck converter

REVISION RECORD			
LTR	ECO NO:	APPROVED:	DATE:

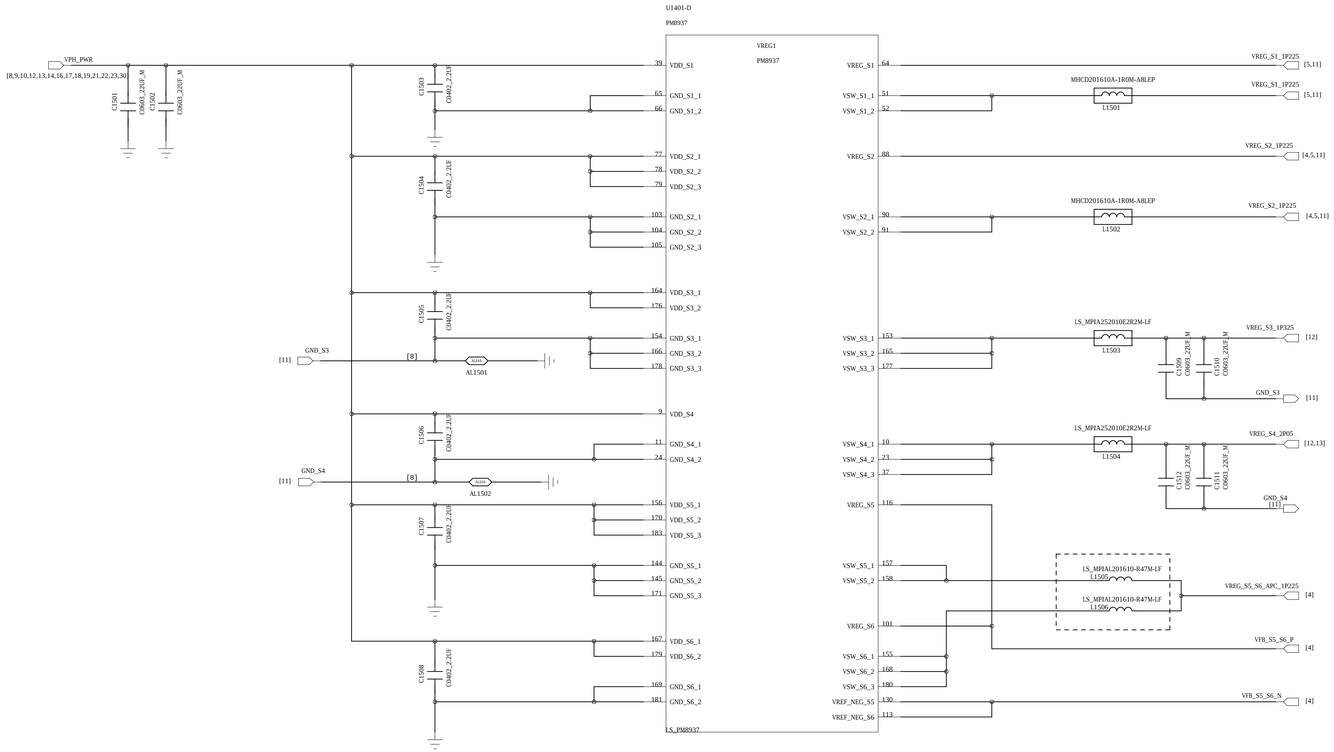

DRAWN: Jimmy(BB), Yue Peng(RF)	DATED: 2016/10/06	COMPANY: HQ	
CHECKED: Yang Junli(BB),Zhang Ruofeng(RF)	DATED: 2016/10/10	TITLE: D52_MB_SCH_V1.0_161110	
QUALITY CONTROL:	DATED:	CODE:	SIZE: D / DRAWING NO: / REV: V1.0
RELEASED:	DATED:	SCALE:	SHEET: 15 OF 38

PM8937 LDO circuits

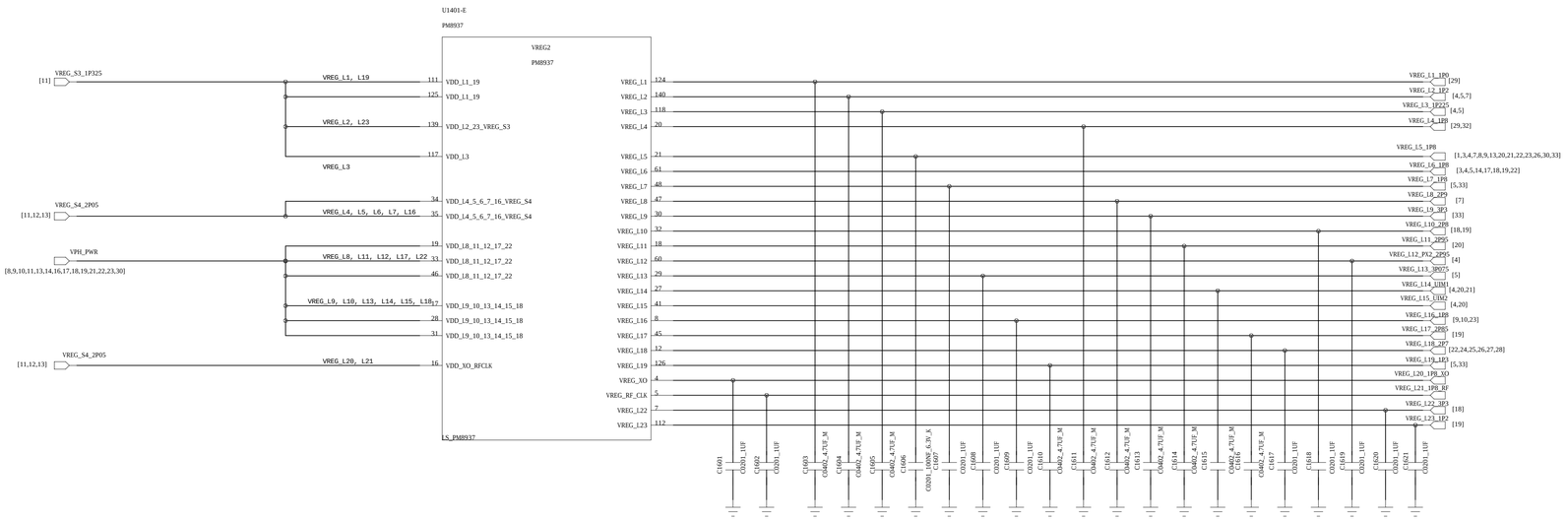

PSEUDO CAPLESS LDOs

L4*, L6, L8*, L9*, L10, L11*, L12, L14, L15, L17*, L18, L22, L23

L4*, L8*, L9*, L11*, L17*, still need validation as Pseudo-capless

L5, L7, L13, L16 have internal PMIC Loads and require local CAPs.

REVISION RECORD			
LTR	ECO NO:	APPROVED:	DATE:

DRAWN: Jimmy(BB), Yue Peng(RF)	DATED: 2016/10/06	COMPANY: HQ	
CHECKED: Yang Junli(BB),Zhang Ruofeng(RF)	DATED: 2016/10/10	TITLE: D52_MB_SCH_V1.0_161110	
QUALITY CONTROL:	DATED:	CODE:	SIZE: D
RELEASED:	DATED:	DRAWING NO:	REV: V1.0
		SCALE:	SHEET: 16 OF 38

PM8937 Codec

REVISION RECORD			
LTR	ECO NO:	APPROVED:	DATE:

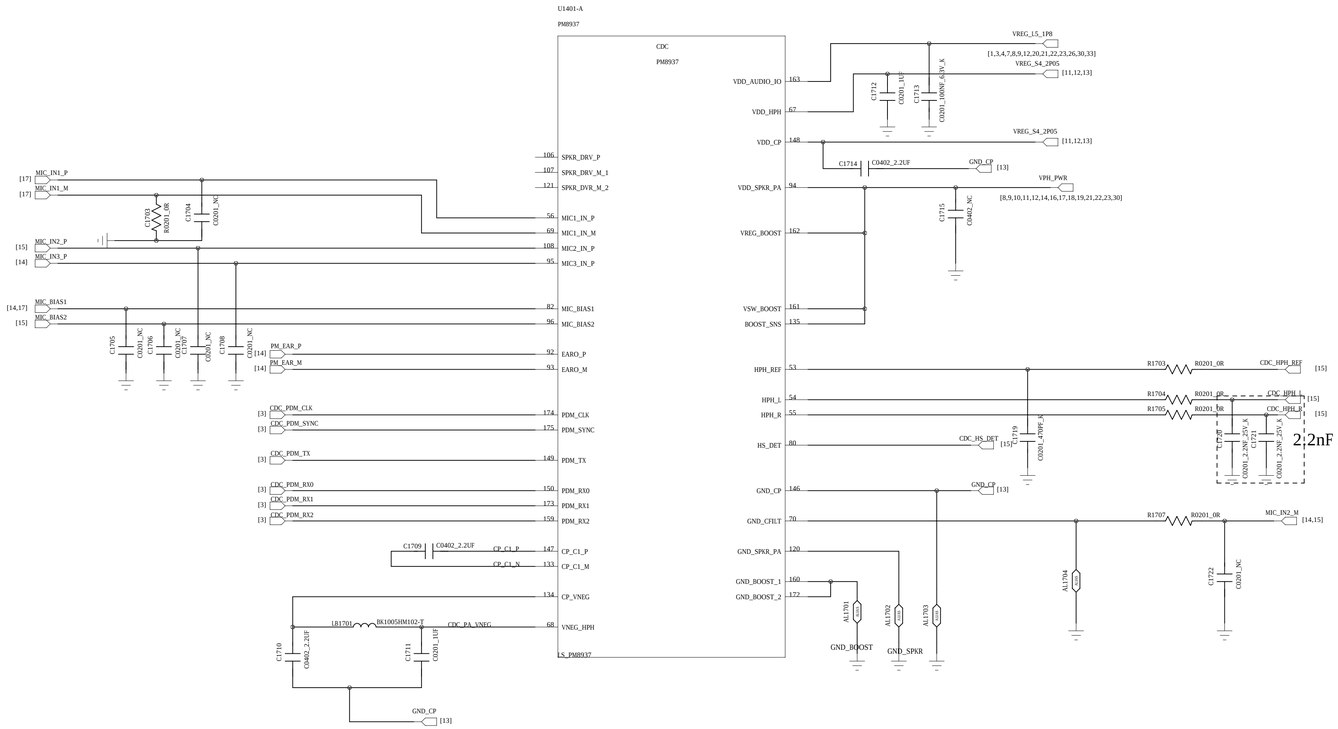

COMPANY:	HQ		
TITLE:	D52_MB_SCH_V1.0_161110		
DRAWN: Jimmy(BB), Yue Peng(RF)	DATED: 2016/10/06		
CHECKED: Yang Junli(BB),Zhang Ruofeng(RF)	DATED: 2016/10/10	CODE:	SIZE: D
QUALITY CONTROL:	DATED:	DRAWING NO:	REV: V1.0
RELEASED:	DATED:	SCALE:	SHEET: 17 OF 38

REVISION RECORD			
LTR	ECO NO:	APPROVED:	DATE:

MIC

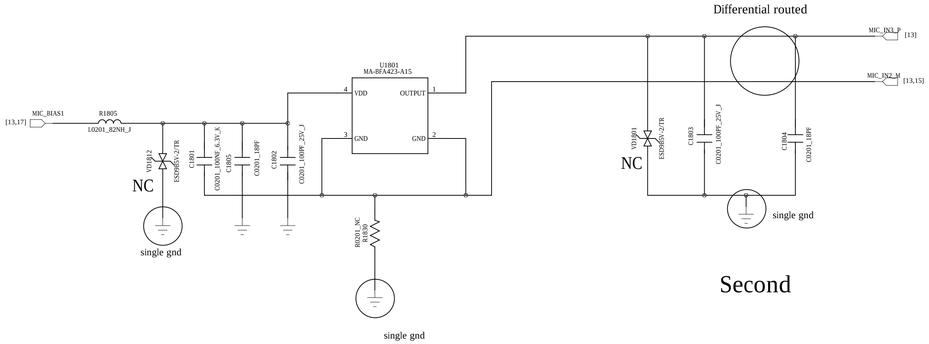

SPK PA

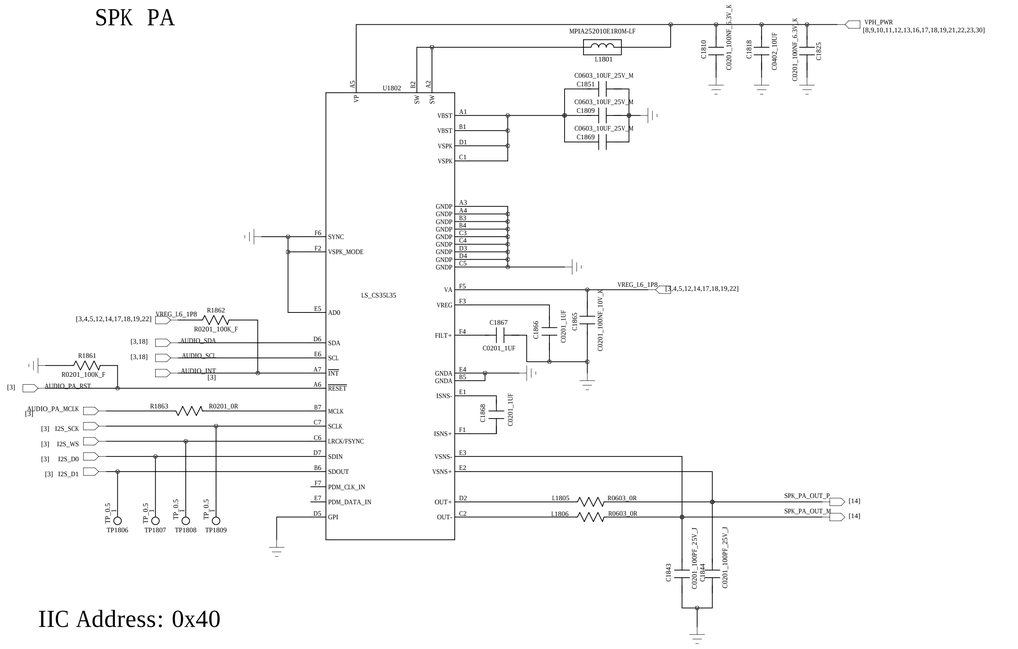

IIC Address: 0x40

RECEIVER

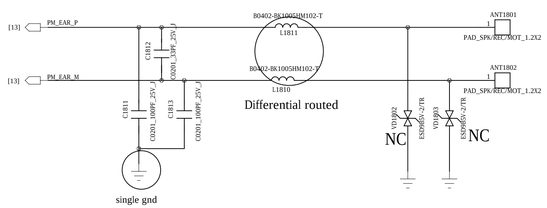

SPK

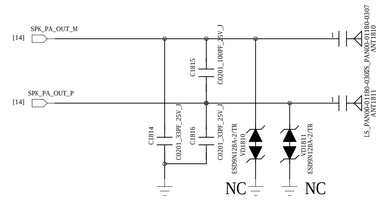

SECONDARY MIC/RECEIVER

DRAWN: Jimmy(BB), Yue Peng(RF)	DATED: 2016/10/06	COMPANY: HQ	
CHECKED: Yang Junli(BB),Zhang Ruofeng(RF)	DATED: 2016/10/10	TITLE: D52_MB_SCH_V1.0_161110	
QUALITY CONTROL:	DATED:	CODE:	SIZE: D 1 / DRAWING NO: / REV: V1.0
RELEASED:	DATED:	SCALE:	SHEET: 18 OF 30

HEADSET JACK

REVISION RECORD			
LTR	ECO NO:	APPROVED:	DATE:

JAF00-05222-016101 Change to 11-0561257

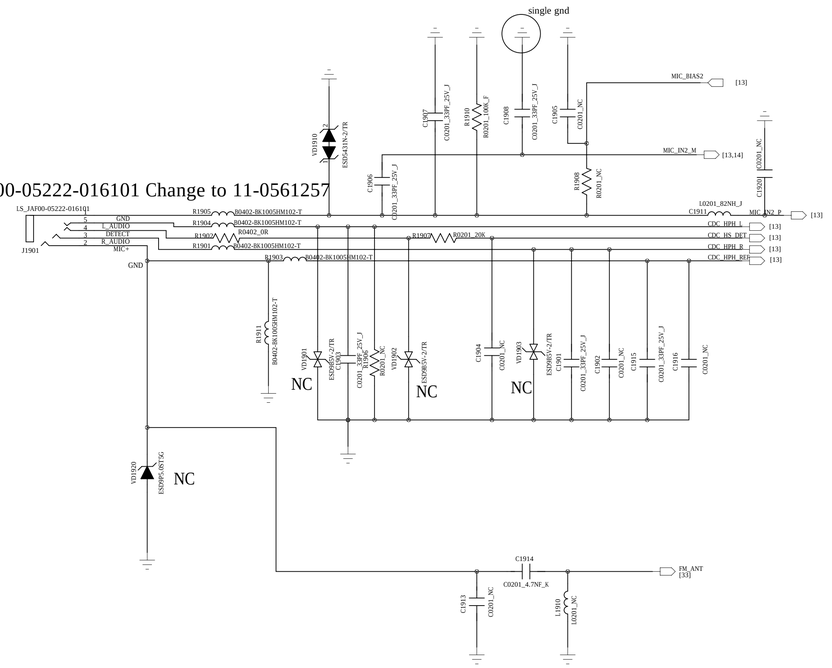

DRAWN: Jimmy(BB), Yue Peng(RF)	DATED: 2016/10/06	COMPANY: HQ			
CHECKED: Yang Junli(BB),Zhang Ruofeng(RF)	DATED: 2016/10/10	TITLE: D52_MB_SCH_V1.0_161110			
QUALITY CONTROL:	DATED:	CODE:	SIZE: D	DRAWING NO:	REV: V1.0
RELEASED:	DATED:	SCALE:		SHEET: 19 OF 38	

REVISION RECORD			
LTR	ECO NO:	APPROVED:	DATE:

LCD-Backlight Driver

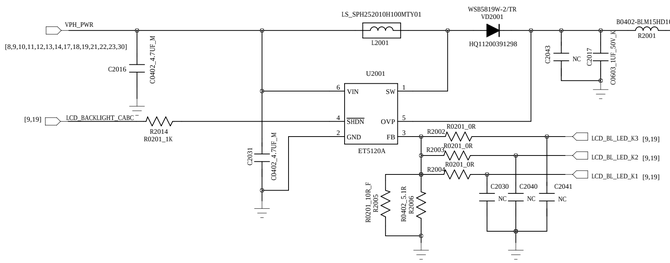

DRAWN: Jimmy(BB), Yue Peng(RF)	DATED: 2016/10/06	COMPANY: HQ	
CHECKED: Xiang Junli(BB),Zhang Ruofeng(RF)	DATED: 2016/10/10	TITLE: D52_MB_SCH_V1.0_161110	
QUALITY CONTROL:	DATED:	CODE:	SIZE: D / DRAWING NO: / REV: V1.0
RELEASED:	DATED:	SCALE:	SHEET: 20 OF 38

Motor

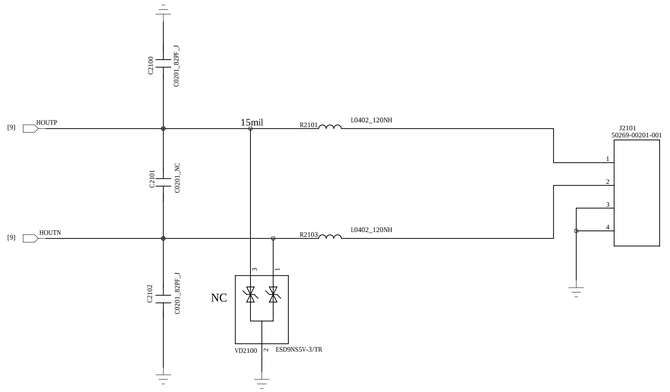

MAIN MIC

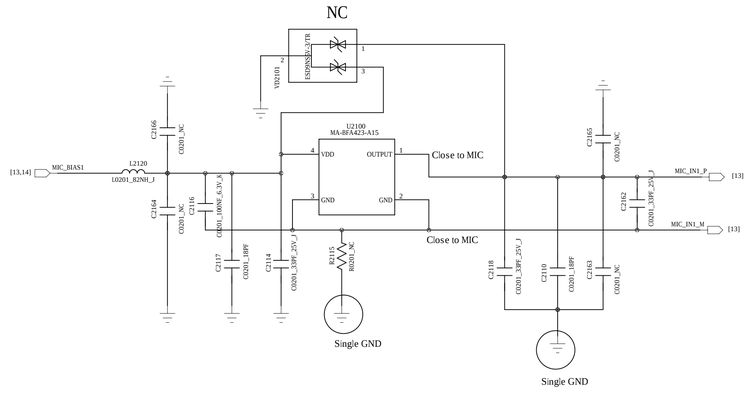

USB

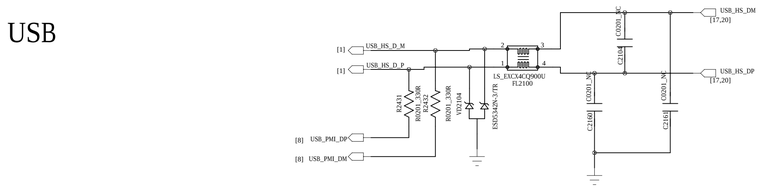

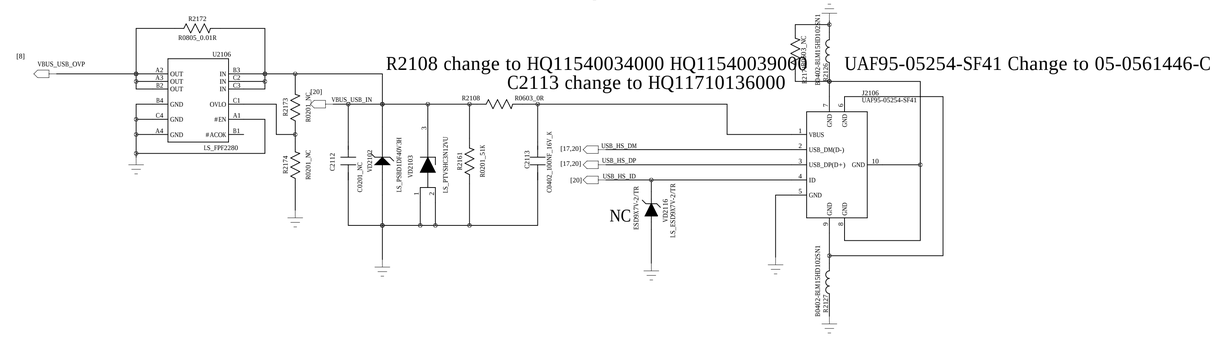

FPS

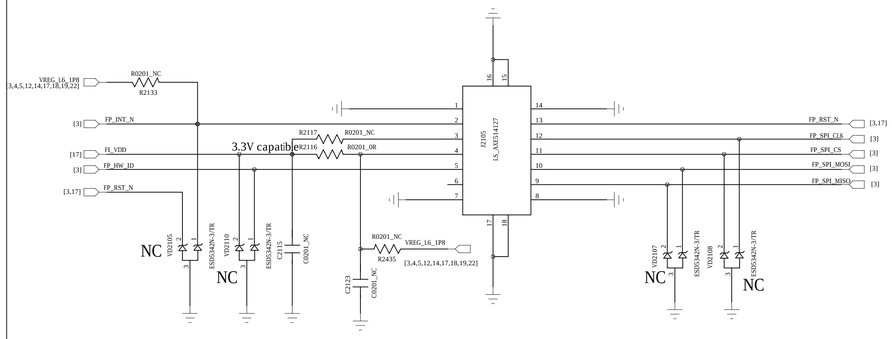

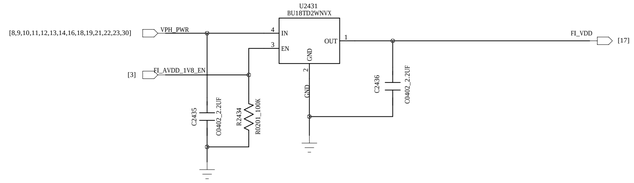

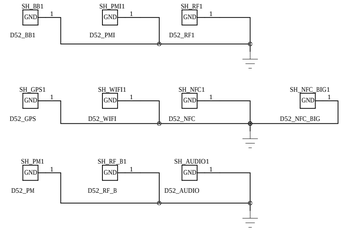

REVISION RECORD			
LTR	ECO NO:	APPROVED:	DATE:

COMPANY: HQ			
TITLE: D52 _ MB _ SCH _ V1.0 _ 161110			
DRAWN: Jimmy (BB) , Yue Peng (RF)	DATED: 2016/10/06	CODE:	SIZE:
CHECKED: Yang Junli (BB) ,Zhang Ruofeng (RF)	DATED: 2016/10/10	DRAWING NO:	REV: V1.0
QUALITY CONTROL:	DATED:	SCALE: 1	SHEET: 1 OF 1
RELEASED:	DATED:		

1	REVISION RECORD		
LTR	ECO NO:	APPROVED:	DATE:

A+G

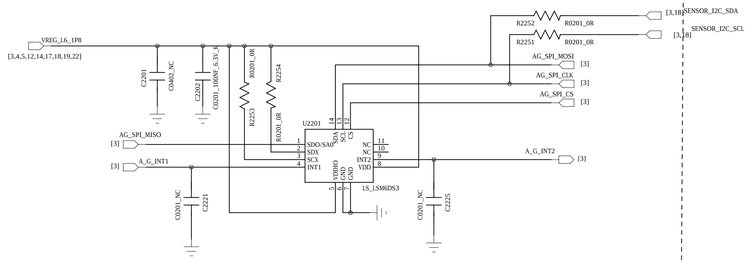

ALS+PS
I2C ADDRESS 0X49 (WRITE:0X92; READ:0X93)

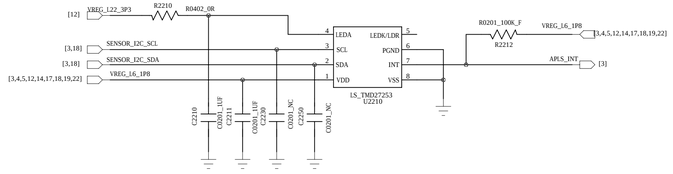

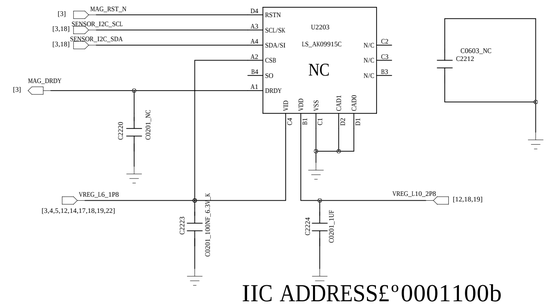

IIC ADDRESS£°0001100b

COMPASS AK09915C

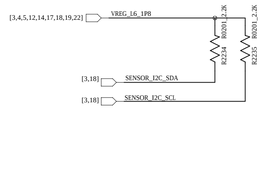

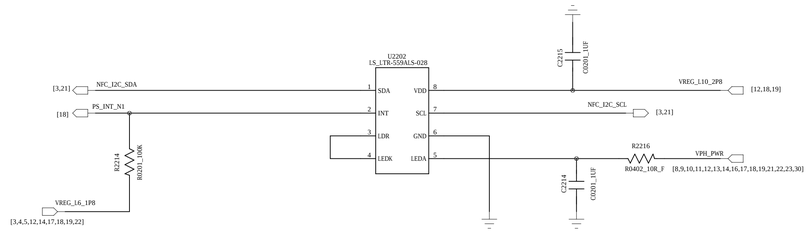

IIC Address: 0x23

ALS+PS

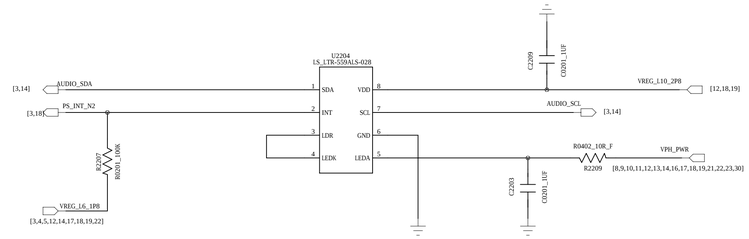

IIC Address: 0x23

ALS+PS

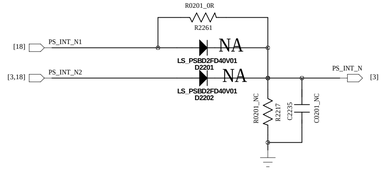

COMPANY:	HQ		
TITLE:	D52_MB_SCH_V1.0_161110		
DRAWN: Jimmy(BB), Yue Peng(RF)	DATED: 2016/10/06		
CHECKED: Yang Junli(BB),Zhang Ruofeng(RF)	DATED: 2016/10/10	CODE:	SIZE: D / DRAWING NO: / REV: V1.0
QUALITY CONTROL:	DATED:		
RELEASED:	DATED:	SCALE:	SHEET: 22 OF 38

CAMERA

Note: If best EMI practices are followed for MIPI CSI/DSI signals, there is no need for common mode choke filters. You may choose to have placeholders for common mode depending upon your design constraints.
Extreme care must be taken that no stubs are created by doing so.

Front Camera 5MP

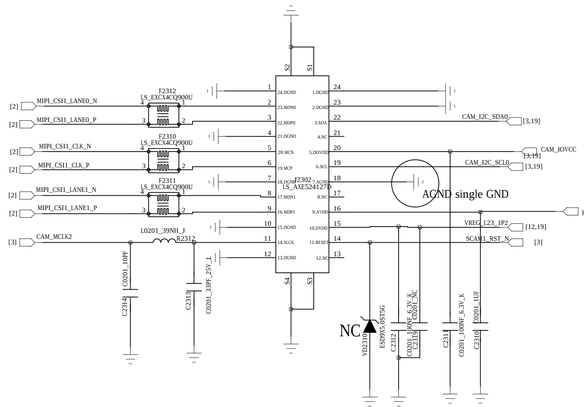

CHANGE TO WL2820D28-4/TR

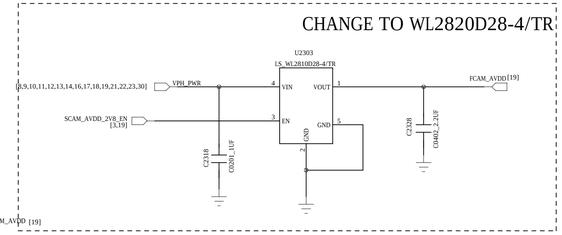

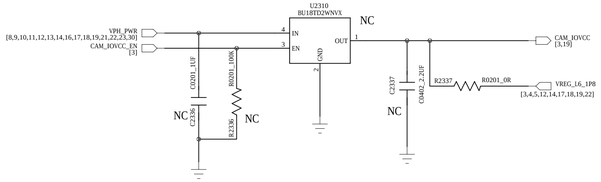

Main Camera 13MP

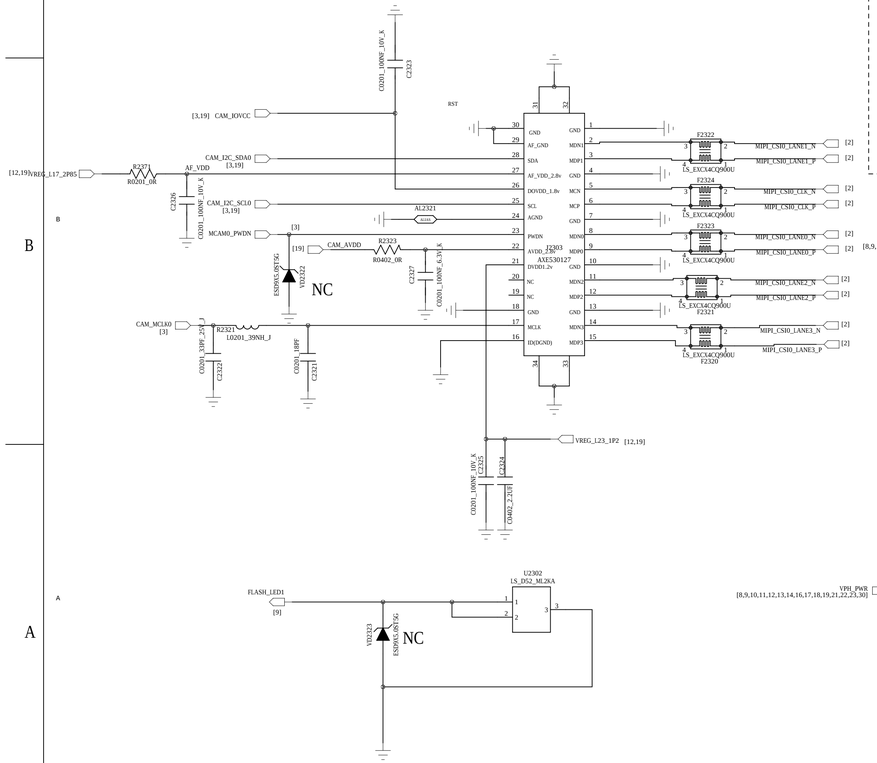

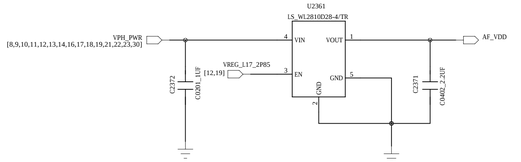

LCD interface and backlight

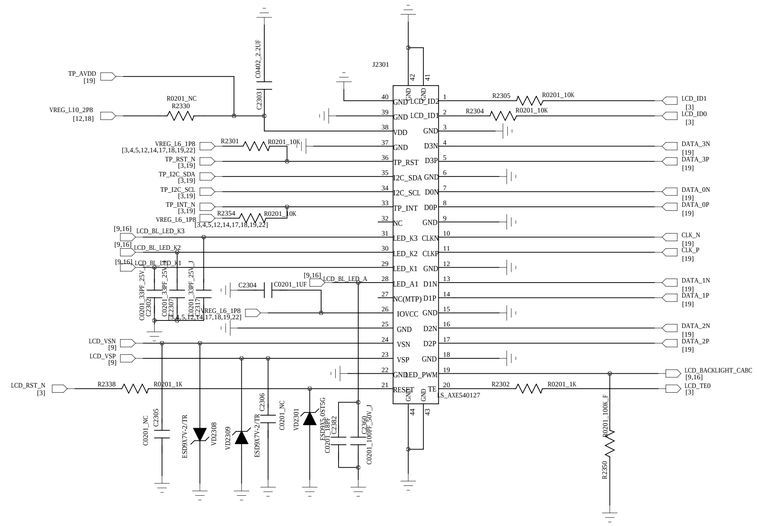
J2301
C0402_2.2UF
C2303
TP_AVDD [19]
R0201_NC
R2330
VREG_L10_2P8 [12,18]
R2301
R0201_10K
VREG_L6_1P8 [3,4,5,12,14,17,18,19,22]
TP_RST_N [3,19]
TP_I2C_SDA [3,19]
TP_I2C_SCL [3,19]
TP_INT_N [3,19]
R2354
R0201_10K
LCD_BL_LED_K3 [9,16]
LCD_BL_LED_K2 [9,16]
LCD_BL_LED_K1 [9,16]
C0201_33PF_25V
C2302
C0201_33PF_25V
C2307
C0201_33PF_25V
C2315
C2304
C0201_1UF
LCD_BL_LED_A [9,16]
VREG_L6_1P8 [3,4,5,12,14,17,18,19,22]
LCD_VSN [9]
LCD_VSP [9]
LCD_RST_N [3]
R2338
R0201_1K
C2305
C0201_NC
ESD05V7V-2-TR
VD2308
ESD05V7V-2-TR
VD2309
ESD05V7V-2-TR
VD2306
C2306
C0201_NC
VD2301
CSTHE5.0T5G
C2302
C0201_1UF
C2307
C0402_2.2UF
C2303
C0201_1UF
C2315
C0402_2.2UF
R2305
R0201_10K
R2304
R0201_10K
R2302
R0201_1K
R2325
R0201_100K_F
LCD_ID1 [3]
LCD_ID0 [3]
DATA_3N [19]
DATA_3P [19]
DATA_0N [19]
DATA_0P [19]
CLK_N [19]
CLK_P [19]
DATA_1N [19]
DATA_1P [19]
DATA_2N [19]
DATA_2P [19]
LCD_BACKLIGHT_CABC [9,16]
LCD_TE0 [3]
GND
GND
GND

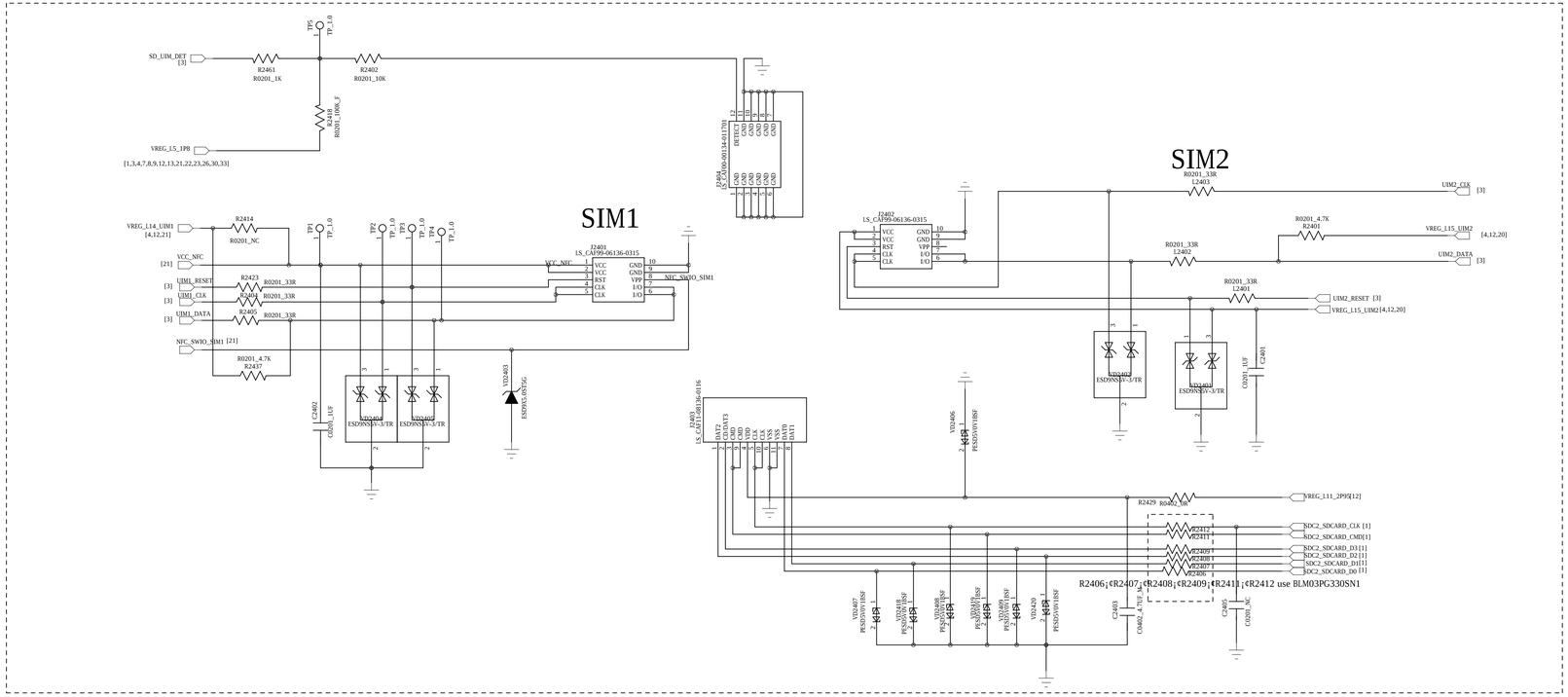

Battery Connector

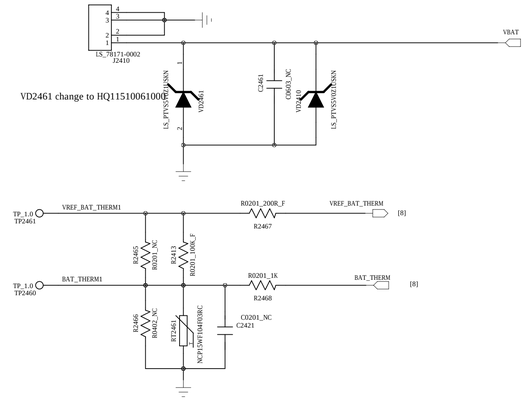

VD2461 change to HQ11510061000

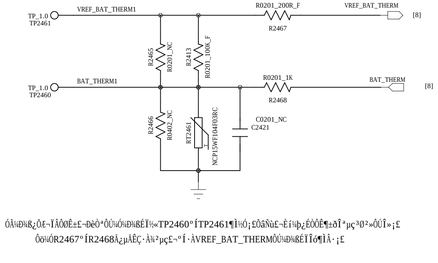

ÔÅ¼Ð¾Ñ¿ÔÊ±Ł-ÎÁÒÐÊ±Ł-ÐèÒ°ÔÛ¼Ôú¤Ð¾Ñ¿ÊÎ¾TP2460°ÍTP2461¶¹¤Ó¡ÊÔâÑòÊ-ÊÍ¾þ¿ÊÔÔÊ¶±ðÎ°µç³Ð³»ÔÛÎ»¡£
ÔèúÓR2467°ÍR2468å¿µÅÊÇ·¼¾²µçÊ-°Í·ÌVREF_BAT_THERMÐÛ¼Ð¾Ñ¿ÊÎTôÉ¶ÍÅ·¡£

Keys

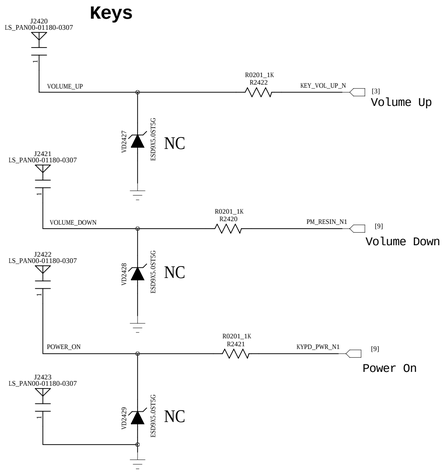

Signal	Description
KPSNS0	Volume Up
PM_RST_N	Volume Down
KYPD_PWR_N	PWER_ON
PM_RST_N + KYPD_PWR_N	Hardware Reset

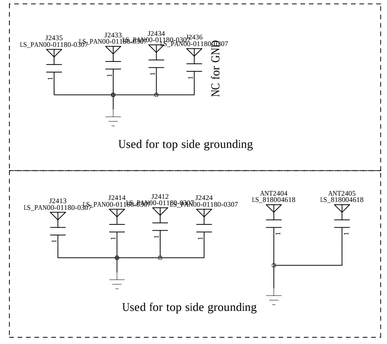

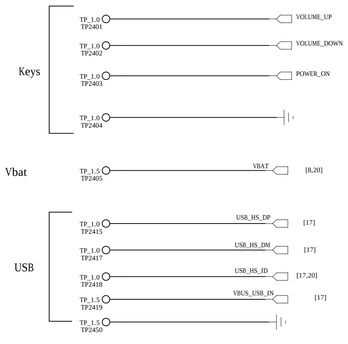

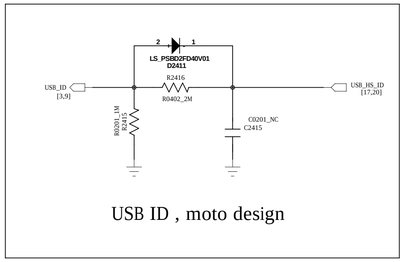

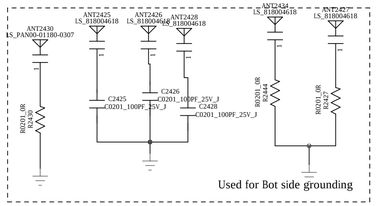

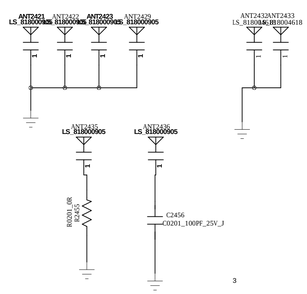

DRAWN: Jimmy(BB), Yue Peng(RF)	DATED: 2016/10/06	COMPANY: HQ	
CHECKED: Xing Jun(BB),Zhang Ruofeng(RF)	DATED: 2016/10/10	TITLE: D52_MB_SCH_V1.0_161110	
QUALITY CONTROL:	DATED:	CODE:	SIZE: D / DRAWING NO: 1 / REV: V1.0
RELEASED:	DATED:	SCALE:	SHEET: 24 OF 38

REVISION RECORD

LTR	ECO NO:	APPROVED:	DATE:

BB

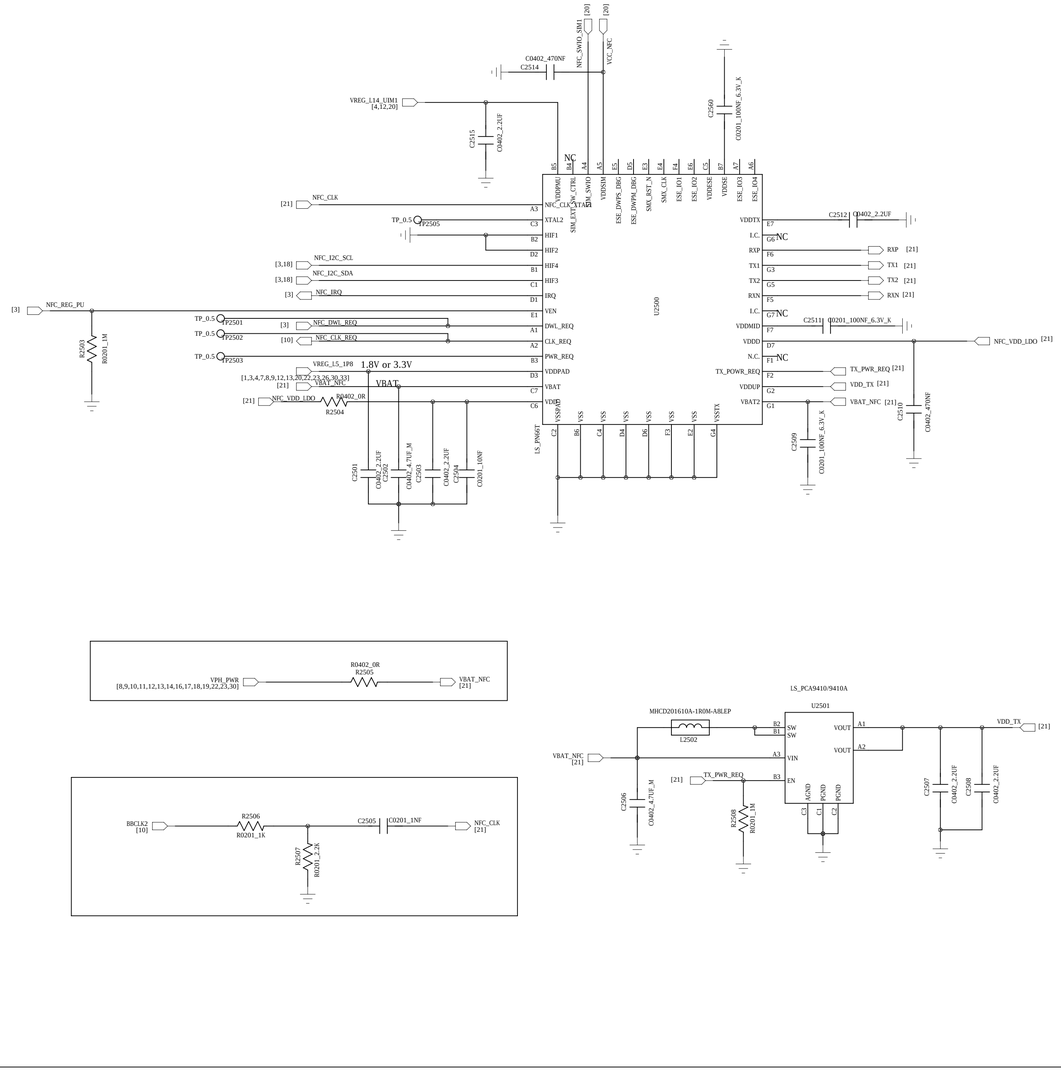

RF

REVISION RECORD			
LTR	ECO NO:	APPROVED:	DATE:

DRAWN: Meng Zhang Jimmy(BB), Yue Peng(RF)	DATED: 2016/10/06	COMPANY: HQ	
CHECKED: Yang Junli(BB),Zhang Ruofeng(RF)	DATED: 2016/10/10	TITLE: D52_MB_SCH_V1.0_161110	
QUALITY CONTROL: <QC By>	DATED: <QC Date>	CODE: <Code>	SIZE: D
RELEASED: <Released By>	DATED: 07/16/2015	DRAWING NO: <Drawing Number>	REV: V1.0
		SCALE: <Scale>	SHEET: 34 of 33

26: PRIMARY_ANTENNA

REVISION RECORD			
LTR	ECO NO:	APPROVED:	DATE:

ANT-Switch-Tuner

ANT-Switch-Tuner

Vreg_L18_2P7_150mA

Note: The SPDT here is for the GSM ORFS issue.

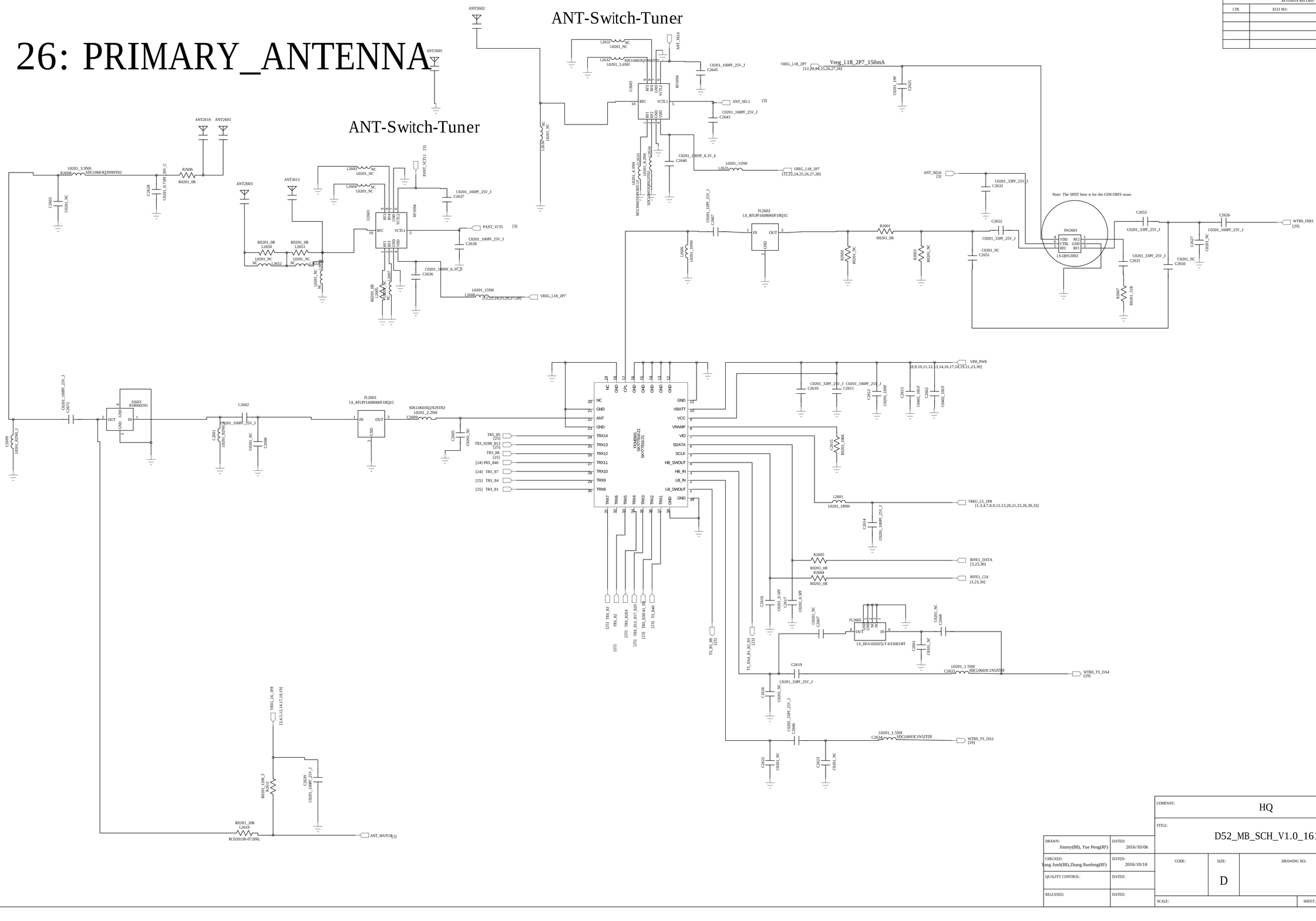

DRAWN: Jimmy(BB), Yue Peng(RF)	DATED: 2016/10/06
CHECKED: Yang Junli(BB),Zhang Ruofeng(RF)	DATED: 2016/10/10
QUALITY CONTROL:	DATED:
RELEASED:	DATED:

COMPANY:	HQ
TITLE:	D52_MB_SCH_V1.0_161110
CODE:	SIZE: D / DRAWING NO: / REV: V1.0
SCALE:	SHEET: 26 OF 38

27: SKY77643 & PA THERMAL

REVISION RECORD			
LTR	ECO NO:	APPROVED:	DATE:

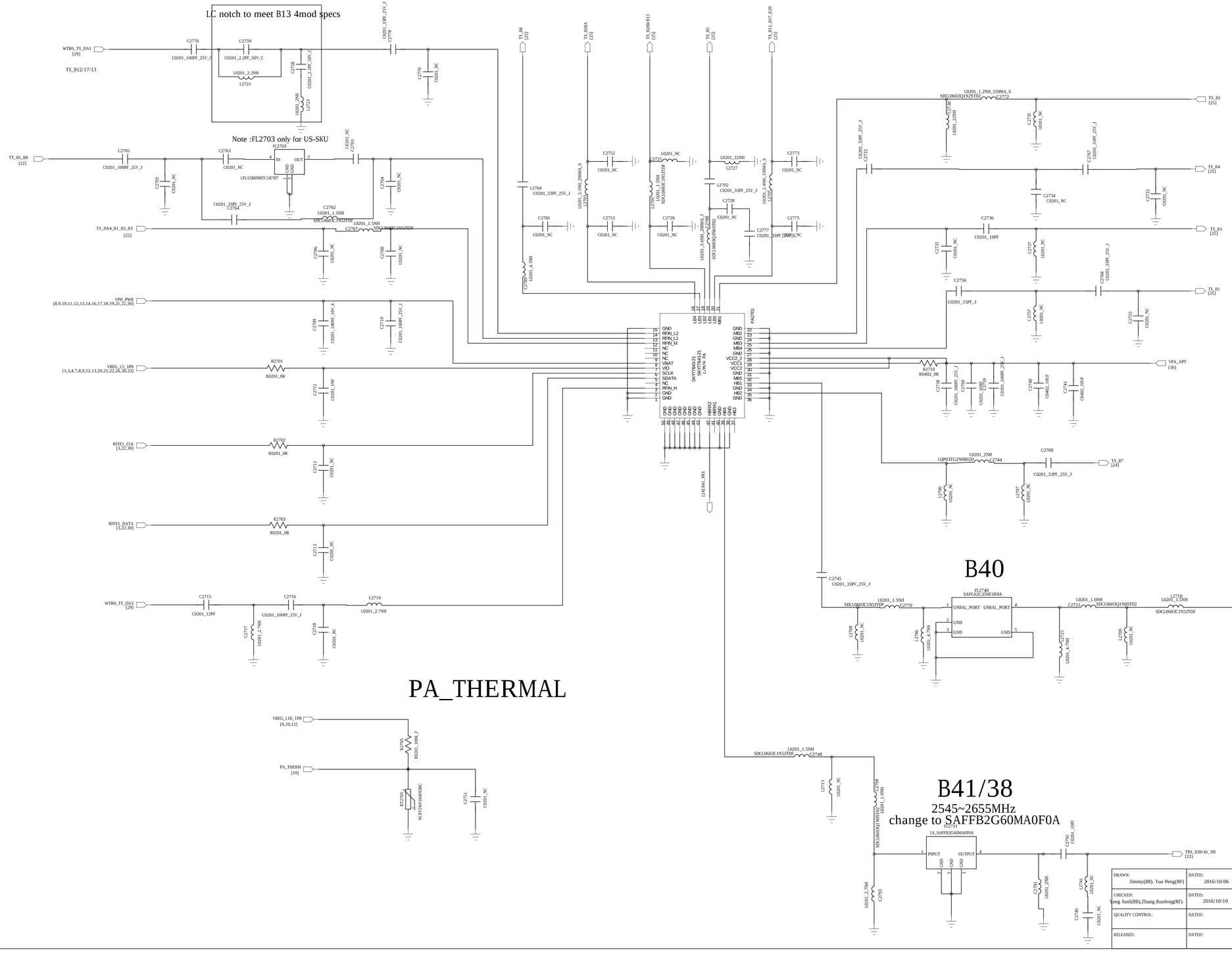
LC notch to meet B13 4mod specs
WTR0_TX_DA1 [29]
TX_B12/17/13
C2776 C0201_100PF_25V_J
C2759 C0201_2.2PF_50V_C
L0201_2.2NH L2721
C2758 C0201_2.2PF_50V_C
L0201_2NH L2723
C2770 C0201_33PF_25V_J
C2779 C0201_NC
Note :FL2703 only for US-SKU
TX_B5_B8 [22]
C2701 C0201_100PF_25V_J
C2763 C0201_NC
FL2703 LFL15869MTC18787
C2765 C0201_NC
C2702 C0201_NC
C2704 C0201_NC
C2764 C0201_33PF_25V_J
C2762 L0201_1.5NH SDCL0603C1N5JTDF
TX_DA4_B1_B2_B3 [22]
L0201_1.5NH SDCL0603C1N5JTDF C2707
C2706 C0201_NC
C2708 C0201_NC
VPH_PWR [8,9,10,11,12,13,14,16,17,18,19,21,22,30]
C2709 C0201_100N5_10V_K
C2710 C0201_100PF_25V_J
VREG_L5_1P8 [1,3,4,7,8,9,12,13,20,21,22,26,30,33]
R2701 R0201_0R
C2711 C0201_1NF
RFFE1_CLK [3,22,30]
R2702 R0201_0R
C2712 C0201_NC
RFFE1_DATA [3,22,30]
R2703 R0201_0R
C2713 C0201_NC
WTR0_TX_DA3 [29]
C2715 C0201_12PF
C2716 C0201_100PF_25V_J
C2719 L0201_2.7NH
C2717 L0201_2.7NH
C2718 C0201_NC
TX_B8 [10]
TX_B28A [10]
TX_B28B/B13 [25]
TX_B5 [25]
TX_B12_B17_B20 [10]
C2752 C0201_NC
L0201_NC C2725
L0201_22NH L2727
C2773 C0201_NC
L0201_5.1NH_2200MA_S L2721
L2701 L0201_2.7NH SDCL0603C2N7STDF
L2702 C0201_33PF_25V_J
L0201_2.4NH_330MA_S L2705
C2728 C0201_NC
L0201_3.6NH_200MA_J L2703
SDCL0603Q3N6STD2
C2777 C0201_33PF_250V_J
C2781 C0201_NC
C2753 C0201_NC
C2726 C0201_NC
C2775 C0201_NC
L2704 C0201_33PF_25V_J
L0201_4.3NH L2705
L0201_1.2NH_550MA_S SDCL0603Q1N2STD2 C2772
C2731 L0201_NC
C2730 L0201_22NH
C2732 C0201_33PF_25V_J
C2707 C0201_33PF_25V_J
TX_R2 [25]
TX_B4 [25]
C2734 C0201_NC
C2733 C0201_NC
C2736 C0201_10PF
C2735 C0201_NC
C2737 L0201_NC
C2708 C0201_33PF_25V_J
TX_B3 [25]
C2756 C0201_15PF_J
C2757 L0201_NC
C2755 C0201_NC
TX_B1 [25]
R2710 R0402_0R
VPA_APT [30]
C2739 C0201_100PF_25V_J
C2740 C0402_10UF
C2741 C0402_10UF
L0201_2NH LQP03TG2N0B02D C2744
C2769 C0201_33PF_25V_J
TX_B7 [24]
L2706 L0201_NC
L2707 L0201_NC
B40
C2745 C0201_33PF_25V_J
L0201_1.5NH SDCL0603C1N5JTDF C2770
FL2740 SAFEA2G35MC0F0A
UNBAL_PORT UNBAL_PORT GND GND GND
L0201_1.0NH C2721 SDCL0603Q1N0STD2
L2710 L0201_1.5NH SDCL0603C1N5JTDF
TX_B40 [22]
L2708 L0201_NC
L2736 L0201_4.7NH
L2725 L0201_4.7NH
L2709 L0201_NC
L0201_1.5NH SDCL0603C1N5JTDF C2748
L2713 L0201_NC
C2708 L0201_1.0NH SDCL0603Q1N0STD2
B41/38
2545~2655MHz
change to SAFFB2G60MA0F0A
FL2711 LS_SAFFB2G60MA0F0A
INPUT OUTPUT GND GND GND
C2792 C0201_100PF
TRX_B38/41_NB [22]
L0201_2.7NH C2793
C2791 L0201_2NH
L2714 L0201_NC
C2746 C0201_NC
PA_THERMAL
VREG_L16_1P8 [9,10,12]
R2705 R0201_100K_F
PA_THERM [10]
RT2702 NCP15WF104J03RC
C2751 C0201_NC
SKY77643-21 LMHA PA
PA2701
GND MB2 MB3 MB4 GND VCC2 VCC1 GND MB1 HB1 GND HB2 HB3
RFIN_L2 RFIN_L1 RFIN_M NC NC NC VBAT VIO SCLK SDATA NC RFIN_H GND GND
HB3 HB2 HB1 HB0 GND GND GND

28: TRX_HB

REVISION RECORD			
LTR	ECO NO:	APPROVED:	DATE:

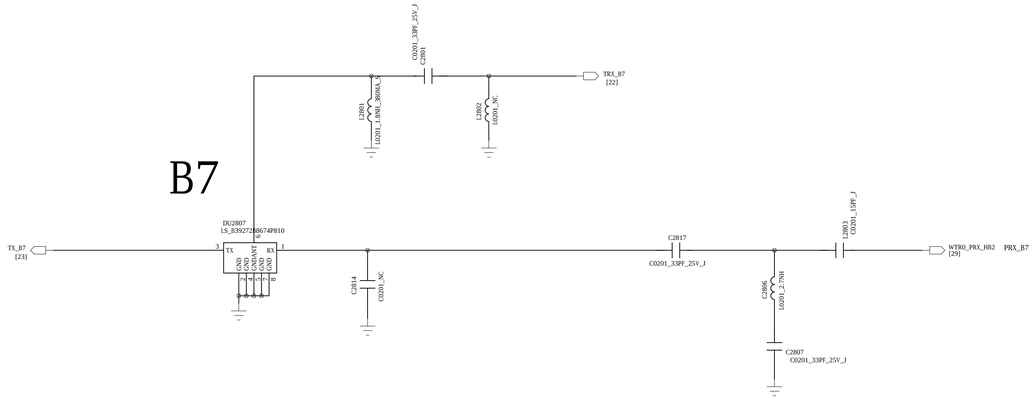

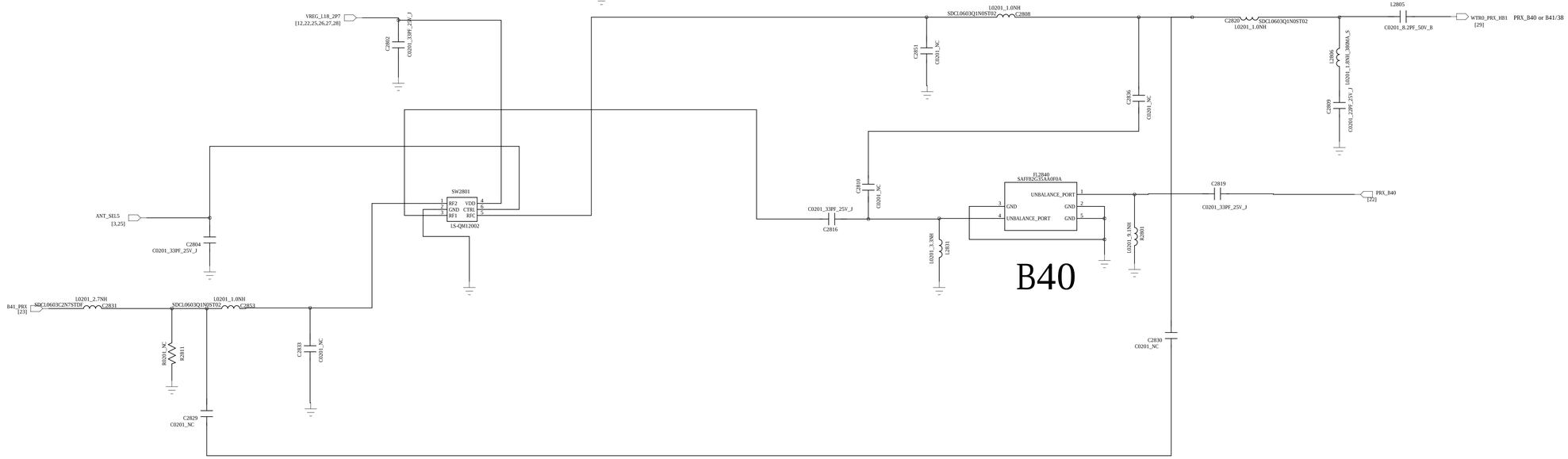

DRAWN: Jimmy(BB), Yue Peng(RF)	DATED: 2016/10/06	COMPANY: HQ			
CHECKED: Yang Junli(BB),Zhang Ruofeng(RF)	DATED: 2016/10/10	TITLE: D52_MB_SCH_V1.0_161110			
QUALITY CONTROL:	DATED:	CODE:	SIZE: D	DRAWING NO:	REV: V1.0
RELEASED:	DATED:	SCALE:		SHEET: 28 OF 38	

29: TRX_LB_MB

REVISION RECORD			
LTR	ECO NO:	APPROVED:	DATE:

B5

WTR0_PRX_LB1 [29] → L2903 L0201_9.1NH → C2906 C0201_33PF_25V_J → DU2905 (RX, TX, ANT, GND GND GND GND) → TX_B5 [23]

L2904 L0201_5.6NH; L2924 L0201_NC; C2907 C0201_33PF_25V_J; L2920 L0201_NC

L0201_1.0NH C2908 SDC10603Q1N0ST02 → TRX_B5 [22]

B8

TRX_B8 [22] → L0201_1.8NH_380MA_S C2911

L2906 L0201_NC; L2910 L0201_8.2NH; C0201_33PF_25V_J C2914

WTR0_PRX_LB3 [29] → L2911 L0201_9.1NH → DU2908 (RX, TX, ANT, GND GND GND GND) → TX_B8 [23]

LS_DSDA942M5R2G6

L2913 L0201_9.1NH; C2916 C0201_33PF_25V_J; L2936 L0201_1.5NH

B28A

TRX_B28A [22] → L0201_3.3NH C2937

L2924 L0201_NC; L2922 L0201_1.0NH

WTR0_PRX_LB2 [29] → L2923 L0201_12NH → C2940 C0201_100PF_25V_J

L2935 L0201_2.7NH_J; C2939 C0201_100PF_25V_J

L0201_4.3NH MGC10603T4N3HT-LF C2902 → DU2920 (RX, TX, ANT, GND GND GND GND) → TX_B28A [23]

L2929 L0201_NC; LS_B39771B8538P810; L2939 L0201_12NH

B28B

SAYEY806MBA0F0A (B20)

B12/17/B20

L0201_1.0NH C2945 SDC10603Q1N0ST02 → TRX_B12_B17_B20 [22]

L2927 L0201_1.5NH; L2908 L0201_NC

[23] TX_B12_B17_B20 → DU2917 (RX, TX, ANT, GND GND GND GND) LS_D5DA737M5K2H2

C0201_22PF_25V_J C2901

SW2902 (ANT, GND, B13, VDD, VC1, GND, VC2, RF2, B13) LS_VC1623

L2920 L0201_8.2NH; SDC10603Q1N0ST02

L0201_4.3NH MGC10603T4N3HT-LF C2926

L2930 L0201_NC; L2910 L0201_8.2NH; C0201_100PF_25V_J C2950

L0201_4.3NH MGC10603T4N3HT-LF C2904 → DU2928 (RX, TX, ANT, GND GND GND GND) LS_B39791B8539P810 → TX_B28B/B13 [23]

L2935 L0201_NC; L2944 L0201_12NH

[3,25] ANT_SEL2; [3,24] ANT_SEL5; VREG_L18_2P7 [12,22,24,25,26,27,28]

C2959 C0201_1NF; C2946 C0201_100PF_25V_J; C2947 C0201_100PF_25V_J

B3

WTR0_PRX_MB2 [29] PRX_B3 → L2905 L0201_1.5NH → C2903 C0201_39PF_25V_J

L2901 L0201_1.8NH; C2909 C0201_33PF_25V_J; TX_B3 [23]

L2933 L0201_4.7NH; L2941 C0201_10PF

DU2903 SAYEY1G748C080A (RX, GND, TX, ANT, GND, GND, GND, GND)

L0201_2.2NH SDC10603Q2N2ST02 C2919 → TRX_B3 [22]

L2934 L0201_8.2NH; SDC10603Q2N2ST02; L2917 L0201_NC

B2

DU2902 SAYEY1G288A080A (RX, GND, GND/ANT, GND, GND, TX)

L0201_2.2NH C2924 SDC10603Q2N2ST02 → TRX_B2 [22]

L2915 L0201_6.2NH_S; L2916 L0201_NC

C0201_1P0F C2934 → TX_B2 [23]

L0201_1.0NH C2933 → PRX_B2 → WTR0_PRX_MB1 [29]

L2912 L0201_7.5NH_2600MA_J; L2913 L0201_2.7NH; L2908 C0201_33PF_25V_J; C2930 C0201_33PF_25V_J

B1

[22] TRX_B1 → L0201_1.0NH C2921 SDC10603Q1N0ST02

L2919 L0201_NC; L2918 L0201_3.6NH_2600MA

[23] TX_B1 → DU2901 (RX, TX, ANT, GND GND GND GND) LS_D6DA2G1408ZA4

L2941 L0201_NC; L2928 L0201_NC

share the same pad → C2941 L0201_NC; C2932 C0201_33PF_25V_J

B4

[22] TRX_B4 → L2926 L0201_NC; L2927 L0201_2.7NH

C0201_33PF_25V_J C2938; C0201_33PF_25V_J C2944

[23] TX_B4 → DU2904 (RX, TX, ANT, GND GND GND GND) LS_D6DA2G132K2D9

L2936 L0201_NC; C2913 L0201_9.1NH

Bypass for Brazil & EMEA

SW2914 (RF2, GND, RF1, VDD, CTRL, RFC) LS-QM12002

ANT_SEL2 [3,25]

VREG_L18_2P7 [12,22,24,25,26,27,28]

C2931 C0201_1NF; C2950 C0201_100PF_25V_J

C2942 C0201_NC; C2927 C0201_33PF_25V_J share the same pad

L2909 L0201_1.2NH_550MA_S → WTR0_PRX_MB3 [29] PRX_B1/B4

L2907 L0201_2.0NH; C2928 C0201_33PF_25V_J

TRX_B28B_B13 [22]

COMPANY:	HQ		
TITLE:	D52_MB_SCH_V1.0_161110		
DRAWN: Jimmy(BB), Yue Peng(RF)	DATED: 2016/10/06		
CHECKED: Yang Junli(BB),Zhang Ruofeng(RF)	DATED: 2016/10/10	CODE:	SIZE: D / DRAWING NO: / REV: V1.0
QUALITY CONTROL:	DATED:		
RELEASED:	DATED:	SCALE:	SHEET: 29 OF 38

30: DIVERSITY_ANT

DIV ANT TUNER

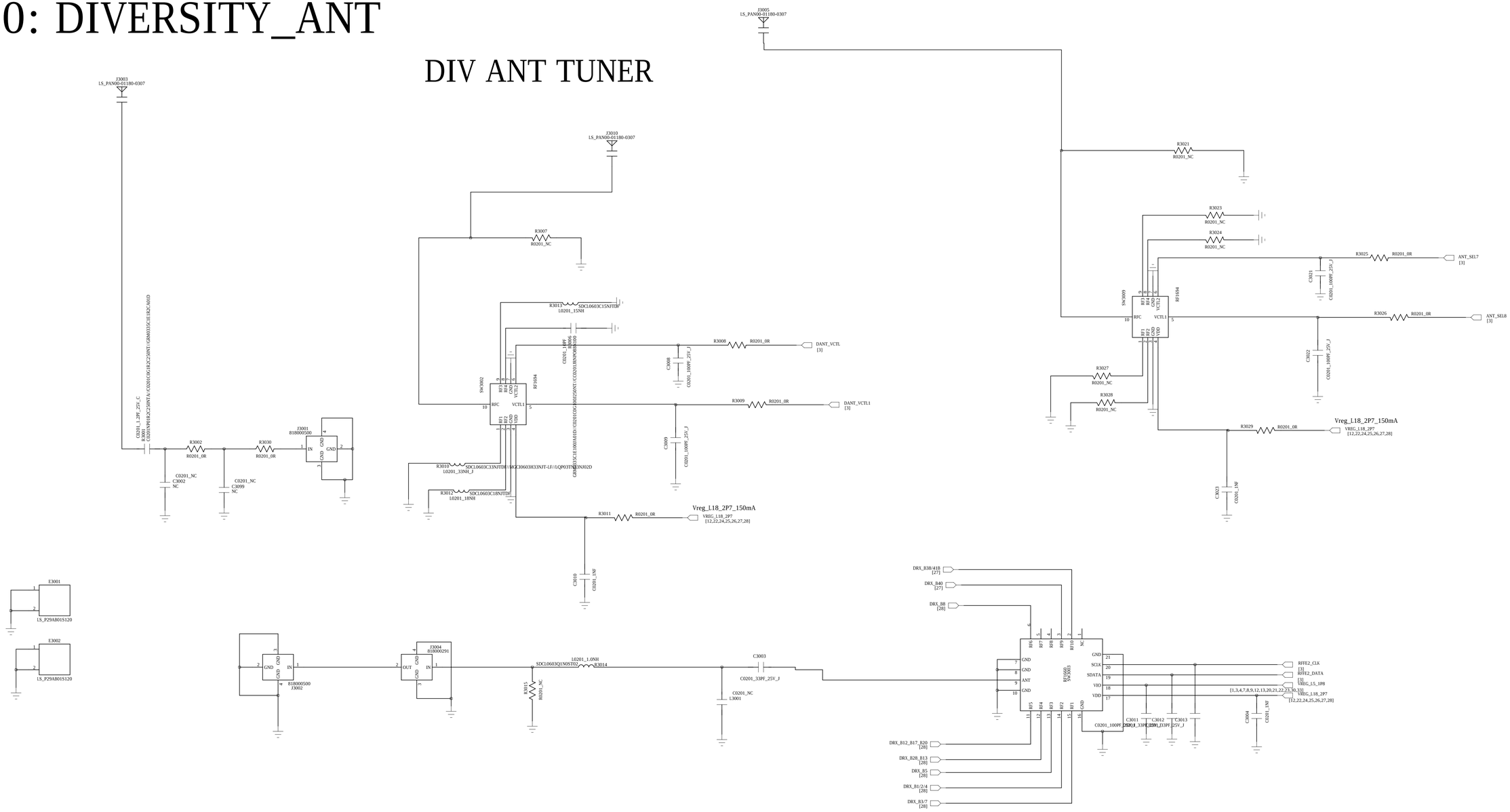

REVISION RECORD			
LTR	ECO NO:	APPROVED:	DATE:

COMPANY: HQ			
TITLE: D52_MB_SCH_V1.0_161110			
DRAWN: Jimmy(BB), Yue Peng(RF)	DATED: 2016/10/06		
CHECKED: Yang Junli(BB),Zhang Ruofeng(RF)	DATED: 2016/10/10	CODE:	SIZE: D
QUALITY CONTROL:	DATED:	DRAWING NO:	REV: V1.0
RELEASED:	DATED:	SCALE:	SHEET: 30 OF 38

REVISION RECORD			
LTR	ECO NO:	APPROVED:	DATE:

31: DRX_HB

B7/B41C

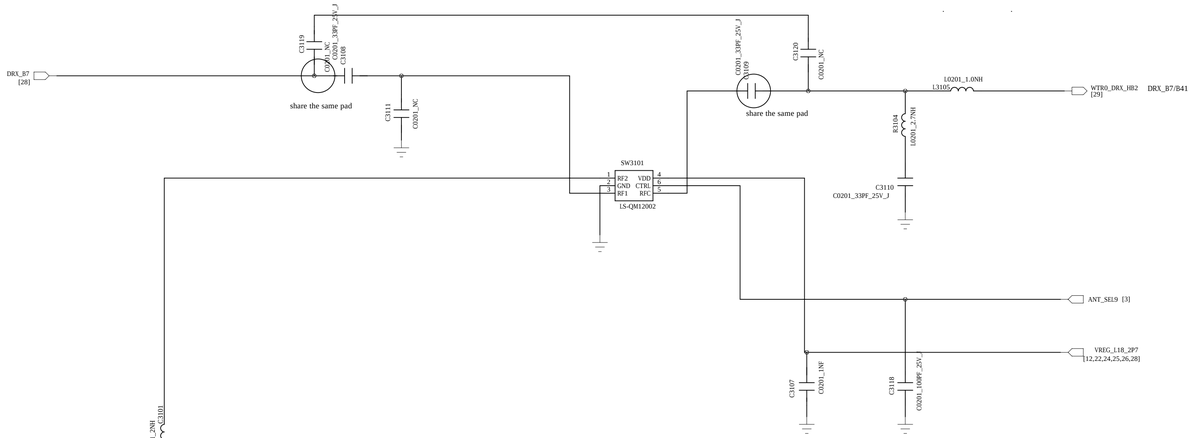

DRX_B38/41B(2545~2655)

change to SAFFB2G60MA0F0A

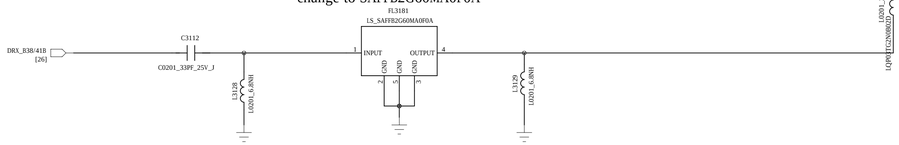

DRX_B40(China&EMEA)

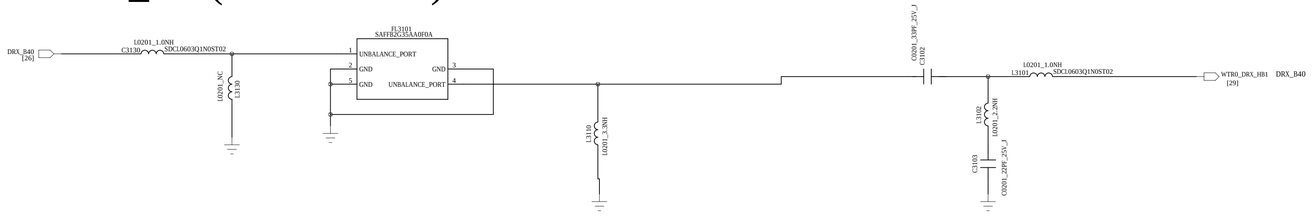

COMPANY:	HQ		
TITLE:	D52_MB_SCH_V1.0_161110		
DRAWN: Jimmy(BB), Yue Peng(RF)	DATED: 2016/10/06		
CHECKED: Yang Junli(BB),Zhang Ruofeng(RF)	DATED: 2016/10/10	CODE:	SIZE: D / DRAWING NO: / REV: V1.0
QUALITY CONTROL:	DATED:		
RELEASED:	DATED:	SCALE:	SHEET: 31 OF 38

32: DRX_LB_MB

REVISION RECORD			
LTR	ECO NO:	APPROVED:	DATE:

B5

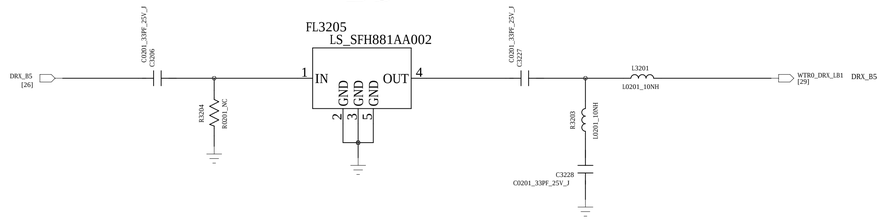

DRX_B1/2/4

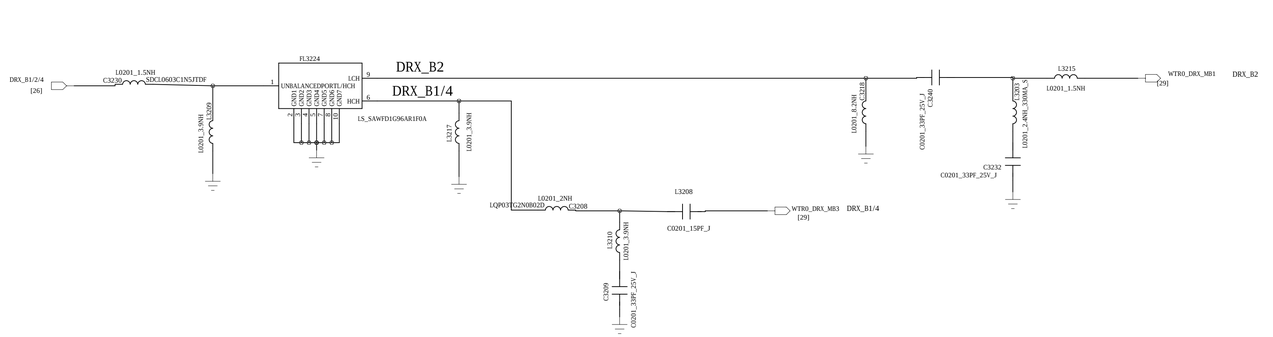

B8

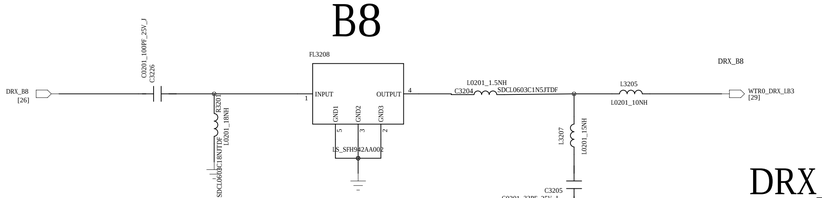

for Brazil B28

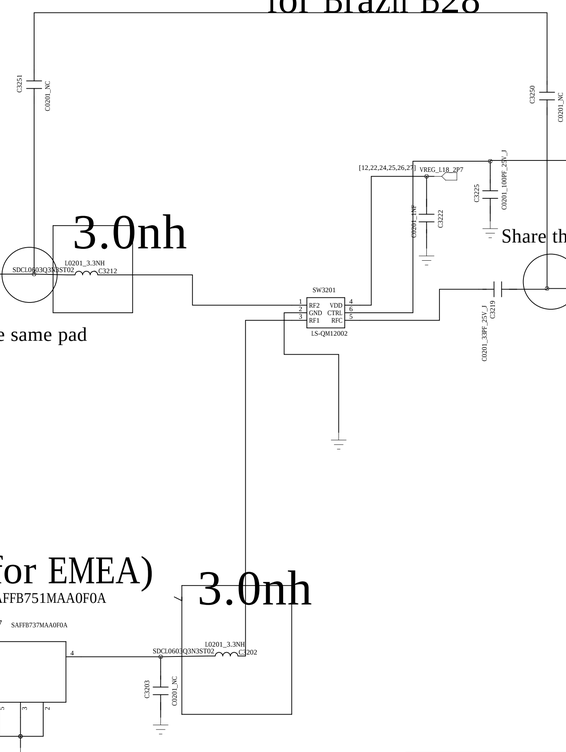

DRX_B13(for US)/B28(LAM and EMEA)

3.0nh

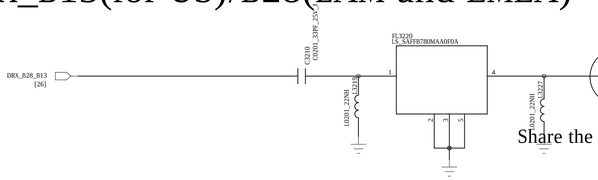

DRX_B3/7

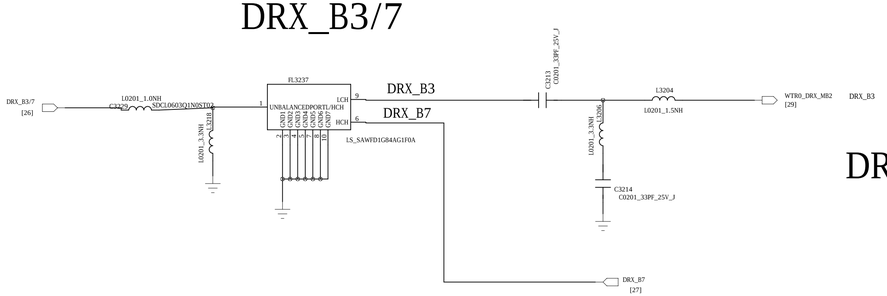

DRX_B12/17(for LatAM&US)/B20(for EMEA)

3.0

3.0nh

B13: SAFFB751MAA0F0A

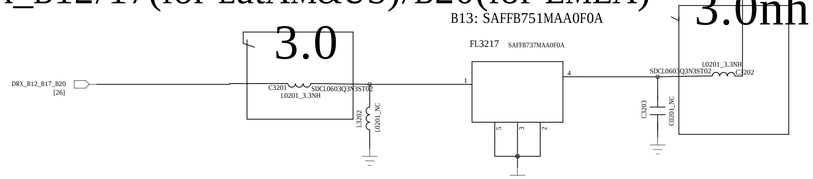

DRAWN: Jimmy(BB), Yue Peng(RF)	DATED: 2016/10/06	COMPANY: HQ	
CHECKED: Yang Junli(BB),Zhang Ruofeng(RF)	DATED: 2016/10/10	TITLE: D52_MB_SCH_V1.0_161110	
QUALITY CONTROL:	DATED:	CODE:	SIZE: D / DRAWING NO: / REV: V1.0
RELEASED:	DATED:	SCALE:	SHEET: 32 OF 38

REVISION RECORD			
LTR	ECO NO:	APPROVED:	DATE:

33: WTR2965 0#

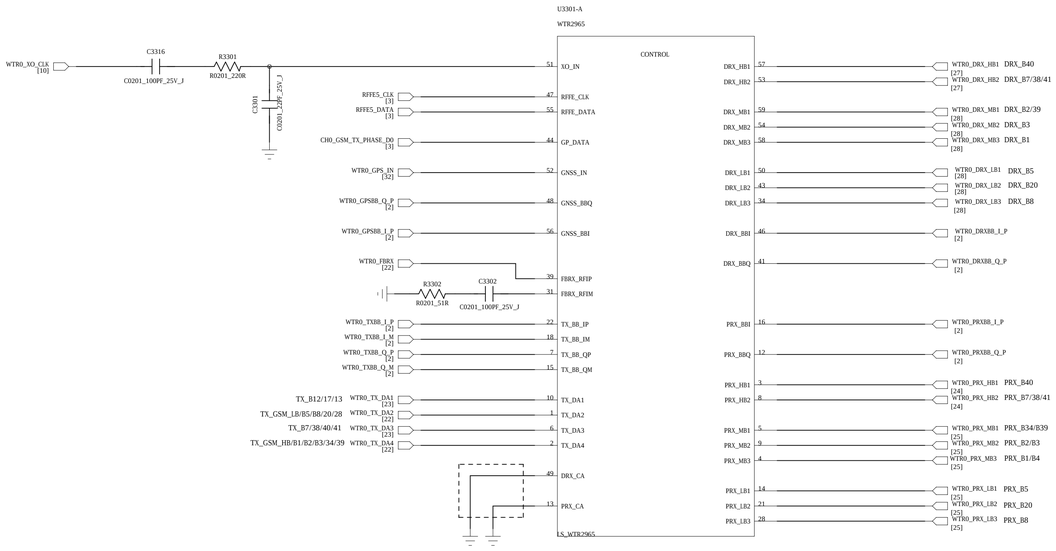

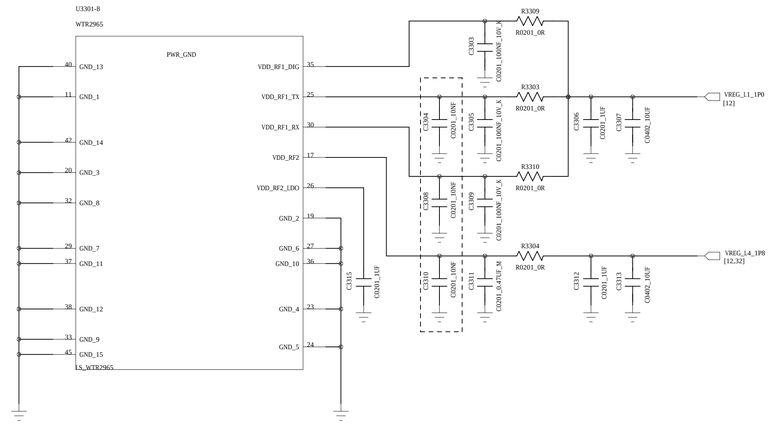

COMPANY: HQ			
TITLE: D52_MB_SCH_V1.0_161110			
DRAWN: Jimmy(BB), Yue Peng(RF)	DATED: 2016/10/06		
CHECKED: Yang Junli(BB),Zhang Ruofeng(RF)	DATED: 2016/10/10	CODE:	SIZE: D
QUALITY CONTROL:	DATED:	DRAWING NO:	REV: V1.0
RELEASED:	DATED:	SCALE:	SHEET: 33 OF 38

REVISION RECORD			
LTR	ECO NO:	APPROVED:	DATE:

35: QFE2101

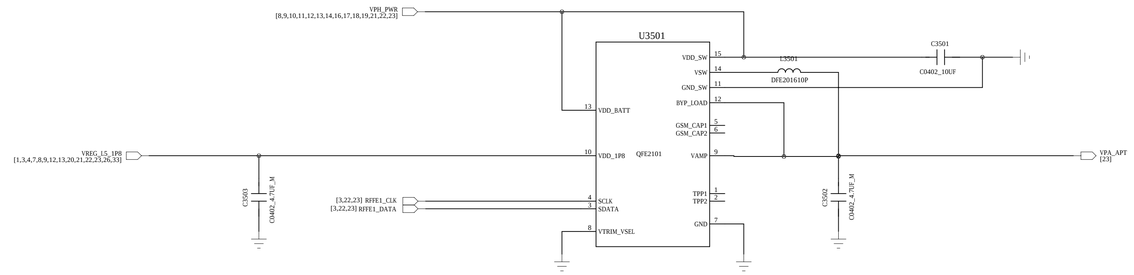

COMPANY: HQ					
TITLE: D52_MB_SCH_V1.0_161110					
DRAWN: Jimmy(BB), Yue Peng(RF)	DATED: 2016/10/06				
CHECKED: Yang Junli(BB),Zhang Ruofeng(RF)	DATED: 2016/10/10	CODE:	SIZE: D	DRAWING NO:	REV: V1.0
QUALITY CONTROL:	DATED:				
RELEASED:	DATED:	SCALE:		SHEET: 35 OF 38	

36£ºWIFI_2.4G_5G

WIFI_ANT_GND

Isolate_GND

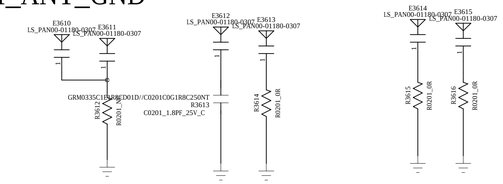

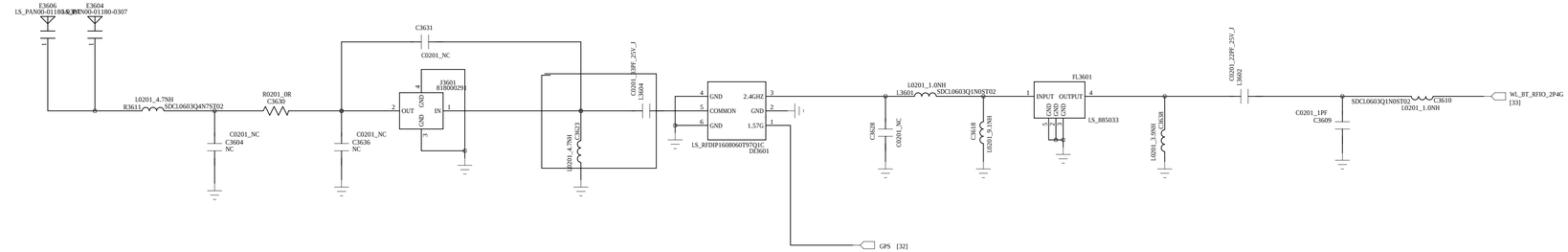

wifi 5G

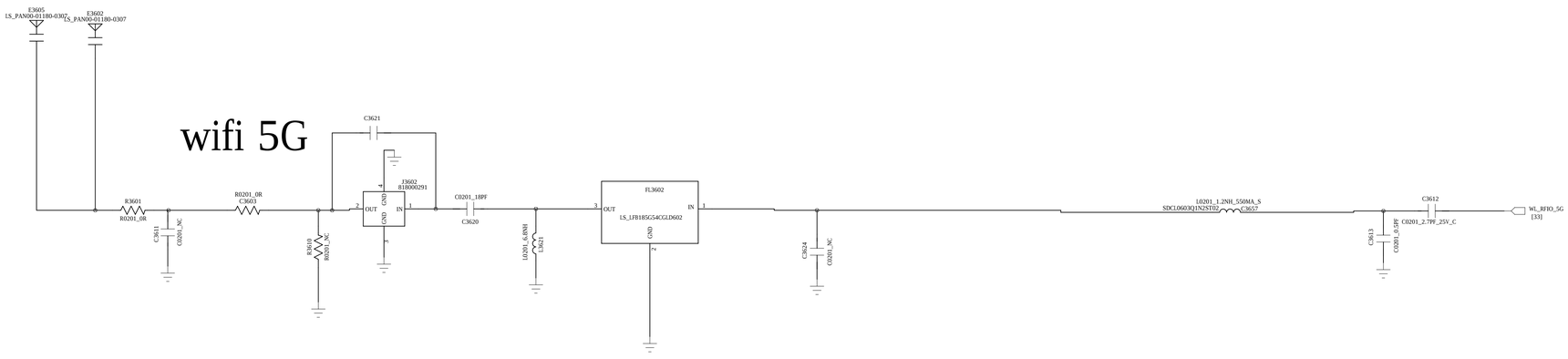

REVISION RECORD			
LTR	ECO NO:	APPROVED:	DATE:

DRAWN: Jimmy(BB), Yue Peng(RF)	DATED: 2016/10/06	COMPANY: HQ	
CHECKED: Yang Junli(BB),Zhang Ruofeng(RF)	DATED: 2016/10/10	TITLE: D52_MB_SCH_V1.0_161110	
QUALITY CONTROL:	DATED:	CODE:	SIZE: D / DRAWING NO: / REV: V1.0
RELEASED:	DATED:	SCALE:	SHEET: 36 OF 38

REVISION RECORD			
LTR	ECO NO:	APPROVED:	DATE:

37: GPS

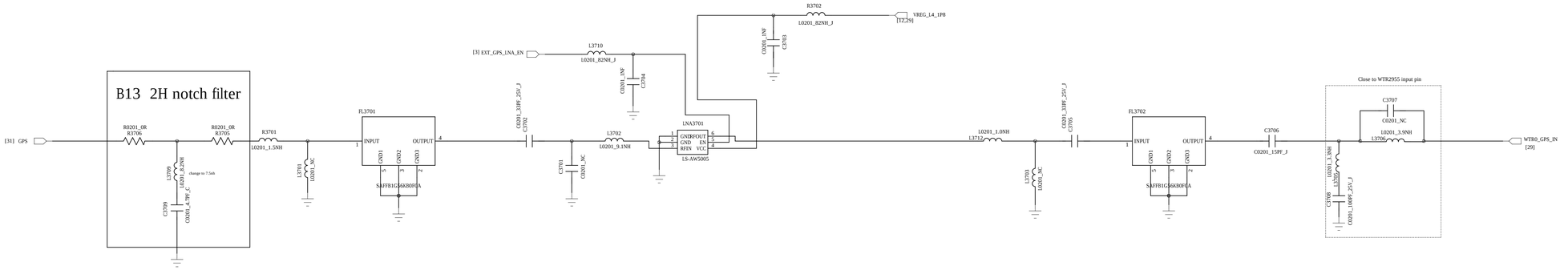

DRAWN: Jimmy(BB), Yue Peng(RF)	DATED: 2016/10/06	COMPANY: HQ	
CHECKED: Yang Junli(BB),Zhang Ruofeng(RF)	DATED: 2016/10/10	TITLE: D52_MB_SCH_V1.0_161110	
QUALITY CONTROL:	DATED:	CODE:	SIZE: D / DRAWING NO: / REV: V1.0
RELEASED:	DATED:	SCALE:	SHEET: 37 OF 38

38£ºWCN3660B

REVISION RECORD			
LTR	ECO NO:	APPROVED:	DATE:

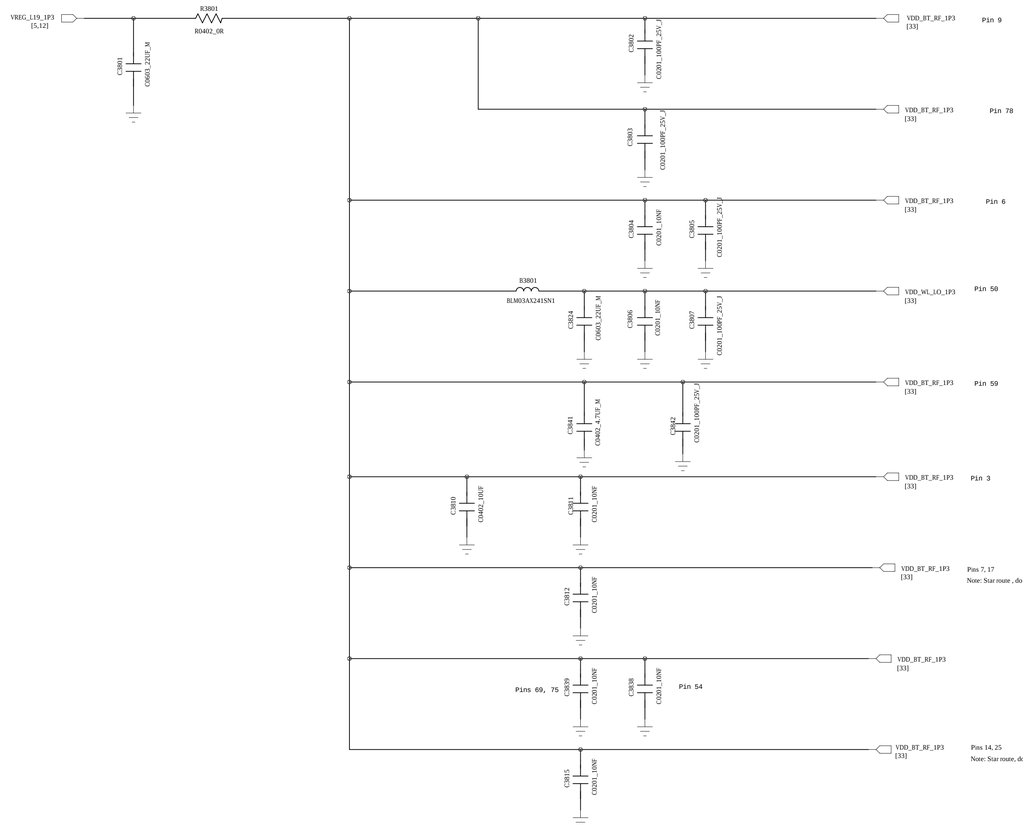

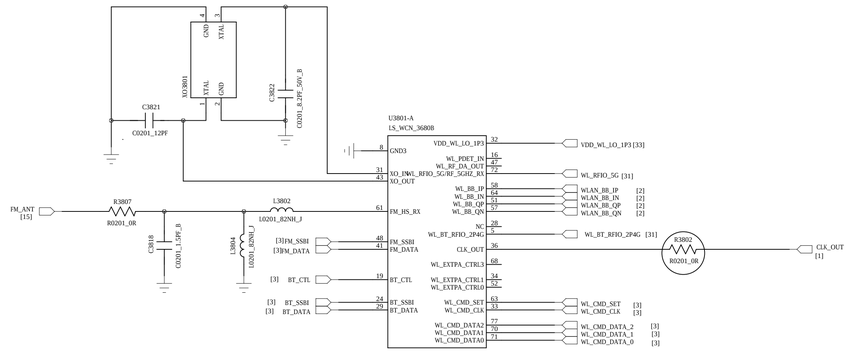

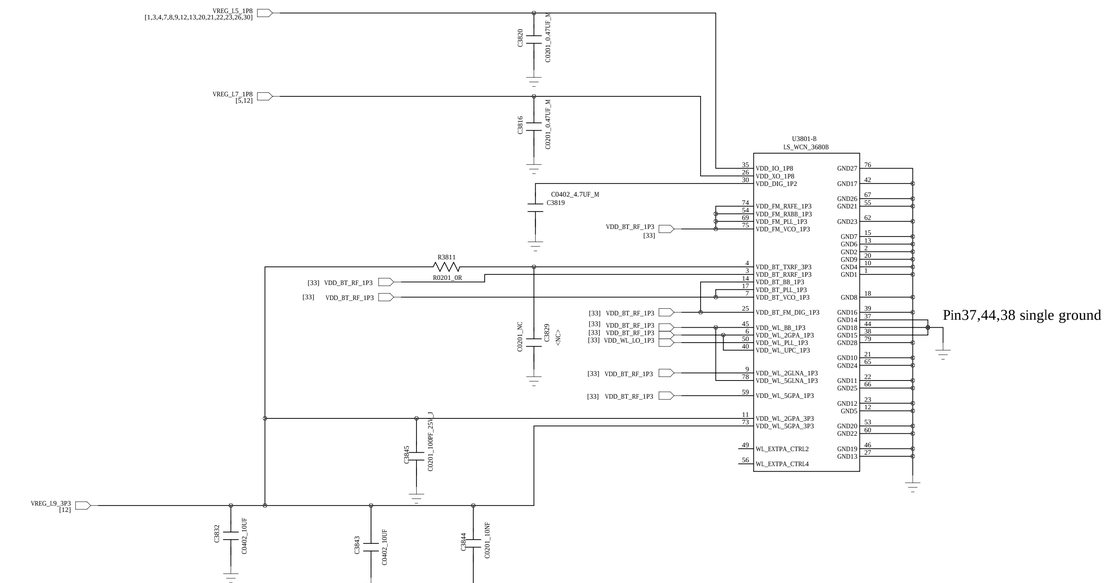

DRAWN: Jimmy(BB), Yue Peng(RF)	DATED: 2016/10/06
CHECKED: Yang Junli(BB),Zhang Ruofeng(RF)	DATED: 2016/10/10
QUALITY CONTROL:	DATED:
RELEASED:	DATED:

COMPANY: HQ			
TITLE: D52_MB_SCH_V1.0_161110			
CODE:	SIZE: D	DRAWING NO:	REV: V1.0
SCALE:		SHEET: 38 OF 38	