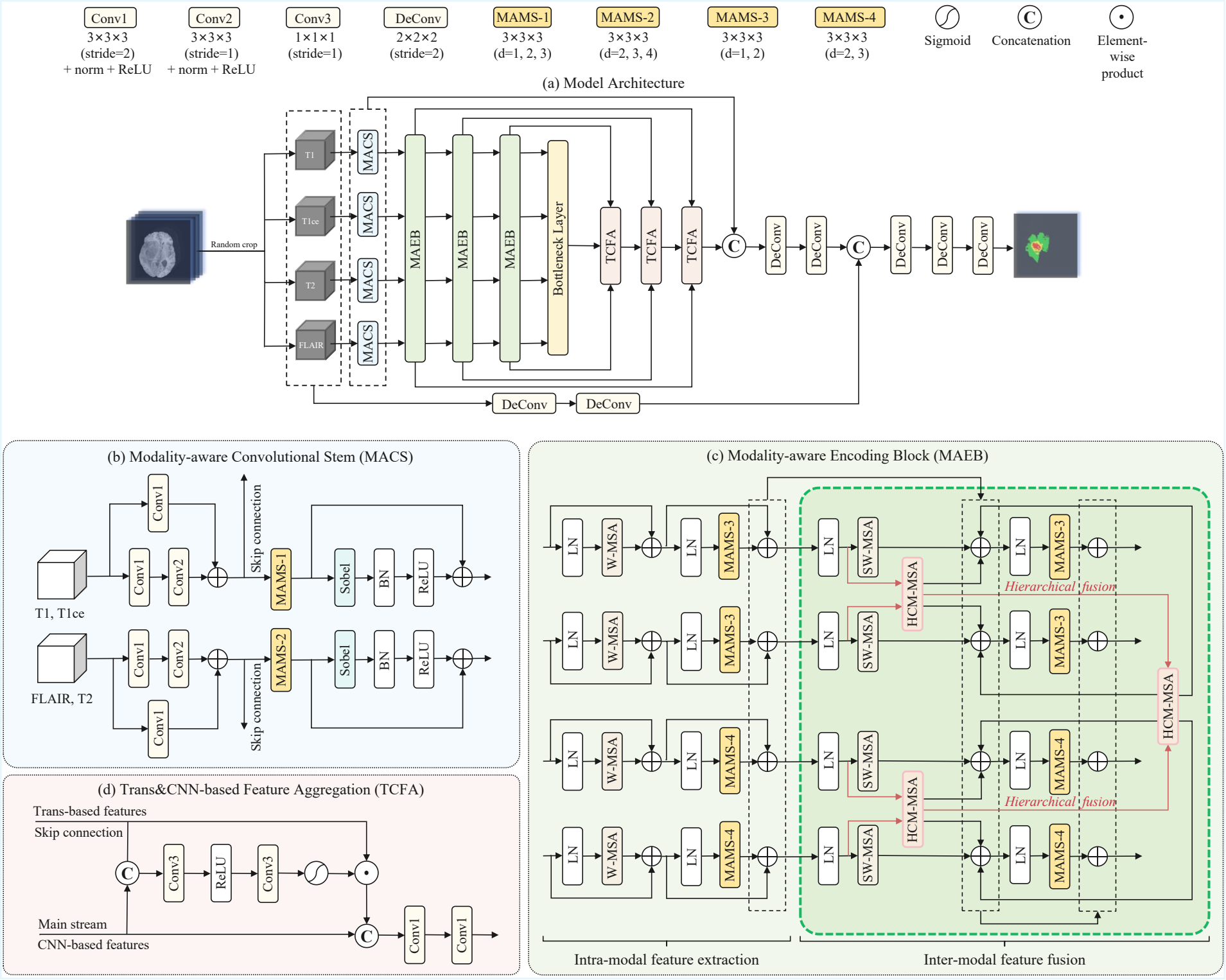
Conv1
3×3×3
(stride=2)
+ norm + ReLU
Conv2
3×3×3
(stride=1)
+ norm + ReLU
Conv3
1×1×1
(stride=1)
DeConv
2×2×2
(stride=2)
MAMS-1
3×3×3
(d=1, 2, 3)
MAMS-2
3×3×3
(d=2, 3, 4)
MAMS-3
3×3×3
(d=1, 2)
MAMS-4
3×3×3
(d=2, 3)
Sigmoid
Concatenation
Element-wise product
(a) Model Architecture
Random crop
T1
T1ce
T2
FLAIR
MACS
MAEB
Bottleneck Layer
TCFA
DeConv
(b) Modality-aware Convolutional Stem (MACS)
T1, T1ce
FLAIR, T2
Conv1
Conv2
Skip connection
MAMS-1
MAMS-2
Sobel
BN
ReLU
(c) Modality-aware Encoding Block (MAEB)
LN
W-MSA
SW-MSA
MAMS-3
MAMS-4
HCM-MSA
Hierarchical fusion
Intra-modal feature extraction
Inter-modal feature fusion
(d) Trans&CNN-based Feature Aggregation (TCFA)
Trans-based features
Skip connection
Main stream
CNN-based features
Conv3
ReLU
Conv1