Arduino Nano

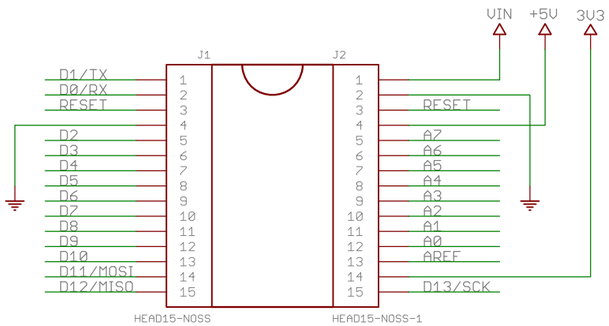

Copyright 2009 under the Creative Commons Attribution Share-Alike 2.5 License

http://creativecommons.org/license/by-sa/2.5/

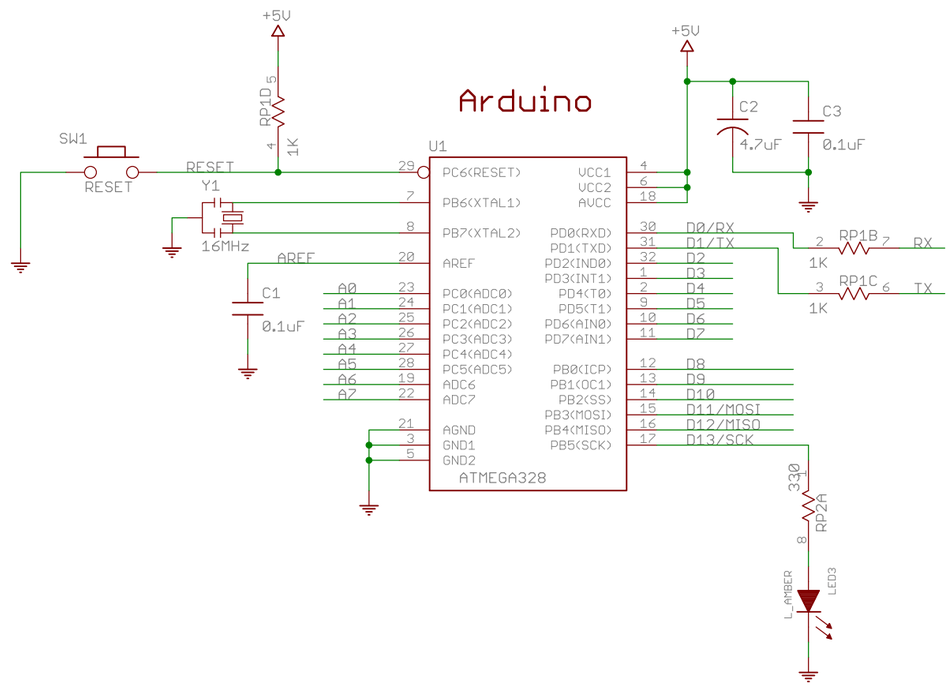

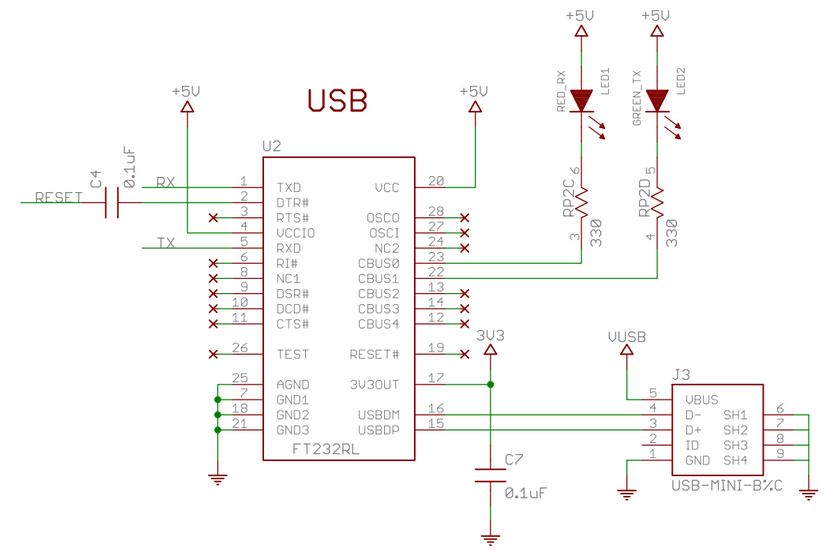

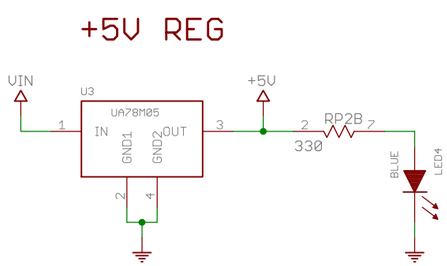

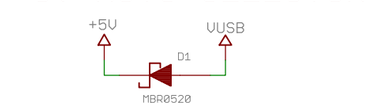

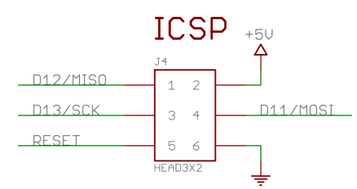

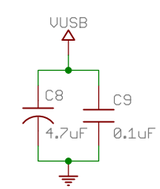

TITLE: Arduino Nano2	
Document Number:	REV: 3.0
Date:	Sheet: 1/1