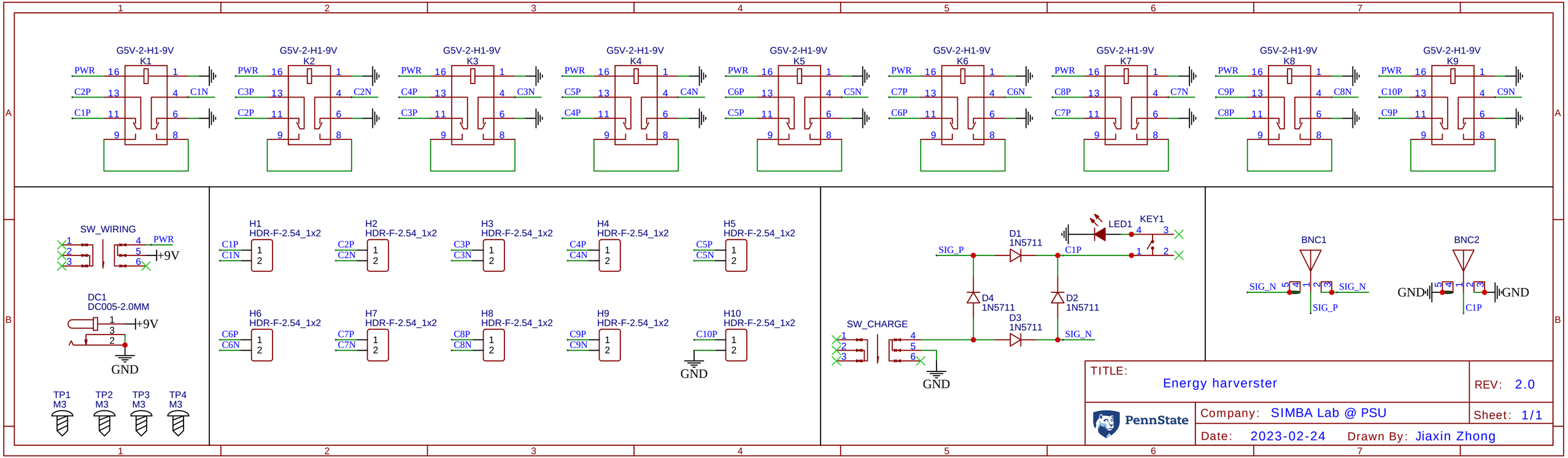
G5V-2-H1-9V
K1
PWR
C2P
C1P
C1N
K2
C3P
C2N
K3
C4P
C3N
K4
C5P
C4N
K5
C6P
C5N
K6
C7P
C6N
K7
C8P
C7N
K8
C9P
C8N
K9
C10P
C9N
SW_WIRING
+9V
DC1
DC005-2.0MM
GND
TP1
TP2
TP3
TP4
M3
H1
H2
H3
H4
H5
H6
H7
H8
H9
H10
HDR-F-2.54_1x2
C10P
SIG_P
SIG_N
D1
D2
D3
D4
1N5711
LED1
KEY1
SW_CHARGE
BNC1
BNC2
TITLE:
Energy harverster
REV: 2.0
PennState
Company: SIMBA Lab @ PSU
Sheet: 1/1
Date: 2023-02-24
Drawn By: Jiaxin Zhong