AD158A Datasheet

Zhuhai Jieli Technology Co.,LTD

Version：V1.3

Date：2024.11.20

ZHUHAI JIELI TECHNOLOGY CO.,LTD

Copyright © Zhuhai Jieli Technology Co.,LTD. All rights reserved.

AD158A Features

CPU Core

- 32-bit CPU,Built-in ICACH, can be connected to Flash for expansion of code
- The main frequency is up to 120MHz

Memory

- On-chip SRAM 20kbyte
- Built-in Flash memory

Clock Source

- RC Clock frequency about 16MHz
- LRC clock frequency about 200KHz

Digital I/O

- 4 programmable digital I/O pins
- General the IO supports pull-up(10k),pull-down(60k), strong,weak output,input and high impedance
- 4 external interrupt/wake-up source(low power available,can be multiplexed to any I/O, with hardware filter)
- Input channel and Output channel, provide arbitrary IO input and output options for some modules

Digital peripherals

- Two UART Controllers(UART0/1) supports DMA and Flow Control
- Two SPI Controllers with DMA(SPI0/1) support master mode and slave mode
- Built-in Spi Flash to run code
- Three 32-bit Asynchronous Divider Timers
- One IIC Controller
- Three channel PWM output
- Infrared remote control decoder
- Watchdog

Analog Peripherals

- 0.5 watt Class-D audio amplifier output
- 10-bit high precision ADC
- Low voltage protection
- Power on reset

PMU

- Soft off current: <2uA
- Power down current: <30uA
- Music mode: <6mA
- LVD range(3bit):1.8V~2.5V, step100mV
- VBAT range : 2.0V~5.5V
- VDDIO range : 2.0V~3.4V

Temperature

- Operating temperature: -40℃ to +85℃
- Storage temperature: -65℃ to +150℃

Package

- SOP8

Application

- Sound Toy
- Audio player

ZHUHAI JIELI TECHNOLOGY CO., LTD

Confidential
The information contained herein is the exclusive property of JIELI and shall not be distributed, reproduced, or disclosed in whole or in part without prior written permission of JIELI.

1 Block Diagram

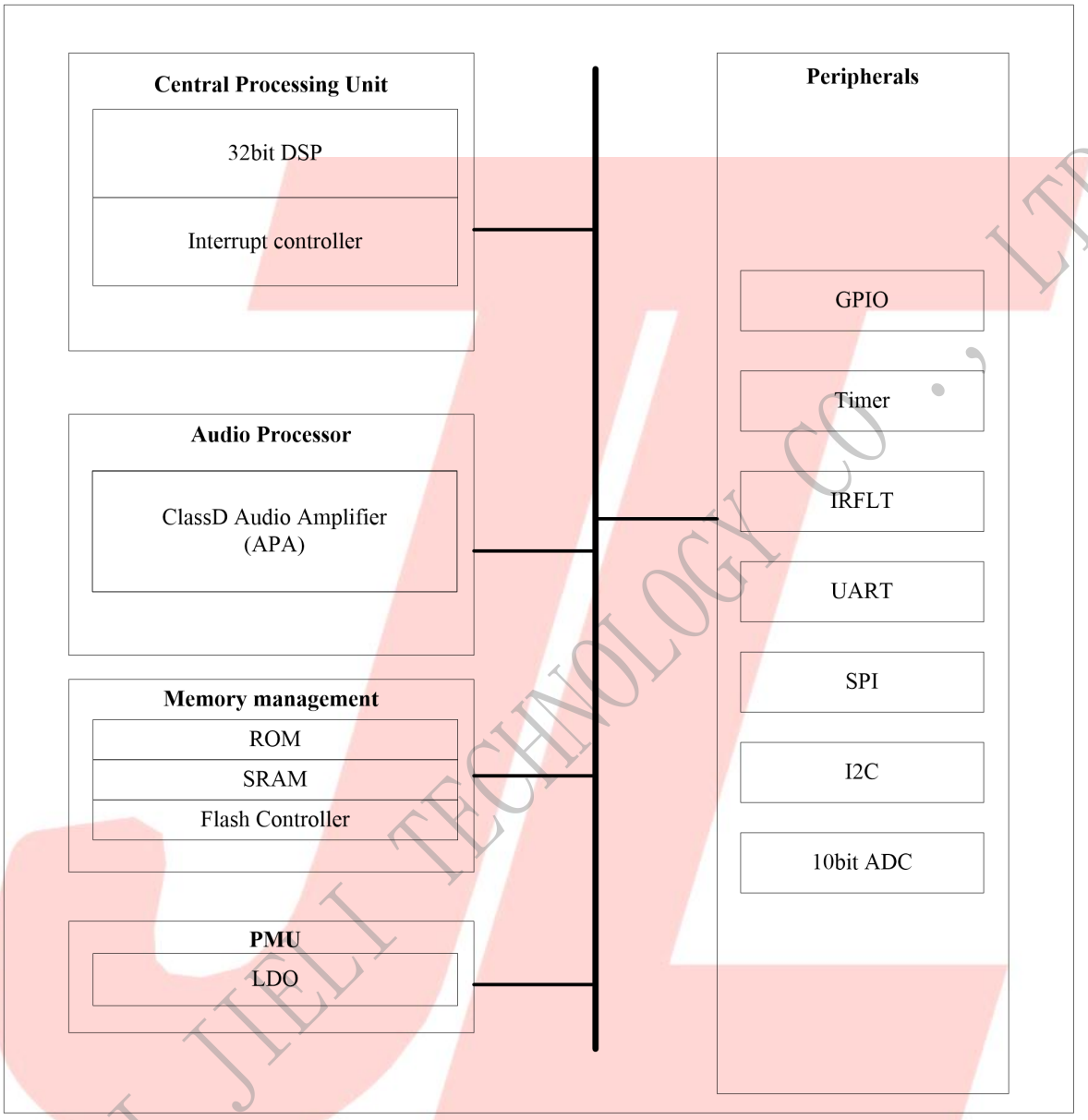

Figure 1-1 AD158A Block Diagram

ZHUHAI JIELI TECHNOLOGY CO., LTD

Confidential
The information contained herein is the exclusive property of JIELI and shall not be distributed, reproduced, or disclosed in whole or in part without prior written permission of JIELI.

2 Pin Definition

2.1 Pin Assignment

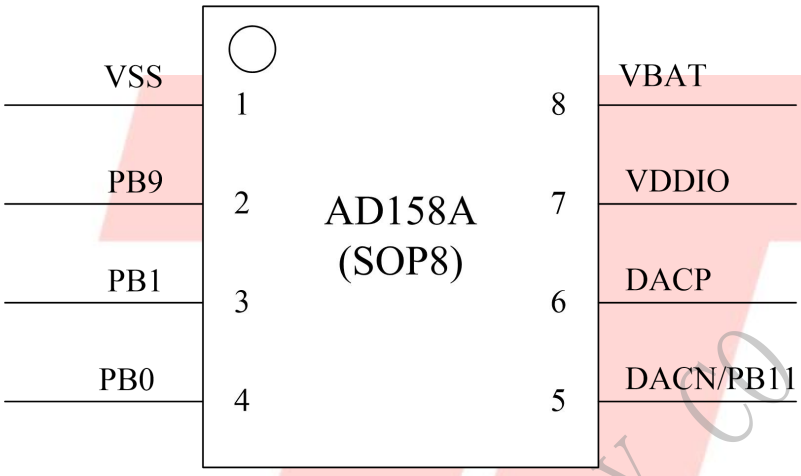

Figure 2-1 AD158A_SOP8 Package Diagram

2.2 Pin Description

Table 2-1 AD158A_SOP8 Pin Description

PIN NO.	Name	Type	Drive (mA)	Function	Description
1	VSS	G	/		Ground;
2	PB9	I/O	8	GPIO (High Voltage Resistance)	UART1TRXB:Uart1 Data In/Out(B); CAP1:Timer1 Capture;
3	PB1	I/O	8/64	GPIO (pull down)	ADC11:ADC Input Channel 11; SPI1DOA:SPI1 Data Out(A); I2C_SDA(A);
4	PB0	I/O	8/64	GPIO (pull down)	ADC10:ADC Input Channel 10; SPI1CLKA:SPI1 Clock(A); I2C_SCL(A);
5	PB11	I/O	8	GPIO (High Voltage Resistance)	OSCIB:Crystal Oscillator Input(B);
	DACN	O	/		Class-D APA Negative Output;
6	DACP	O	/		Class-D APA Positive Output;
7	VDDIO	P	/		Digital Power; (Internal linear regulator output)
8	VBAT	P	/		Battery Power Supply;

ZHUHAI JIELI TECHNOLOGY CO., LTD

Confidential
The information contained herein is the exclusive property of JIELI and shall not be distributed, reproduced, or disclosed in whole or in part without prior written permission of JIELI.

3 Electrical Characteristics

3.1 Absolute Maximum Ratings

Table 3-1

Symbol	Parameter	Min	Max	Unit
Tamb	Ambient Temperature	-40	+85	℃
Tstg	Storage temperature	-65	+150	℃
VBAT	Supply Voltage	-0.3	5.5	V
$V_{VDDIO33}$	3.3V IO Input Voltage	-0.3	3.6	V

Note : The chip can be damaged by any stress in excess of the absolute maximum ratings listed below.

3.2 PMU Characteristics

Table 3-2

Symbol	Parameter	Min	Typ	Max	Unit	Test Conditions
VBAT	Voltage Input	2.0	3.7	5.5	V	_
V_{VDDIO}	Voltage output	2.0	3.0	3.4	V	VBAT = 3.7V, 100mA loading
I_{VDDIO}	Loading current	_	_	100	mA	VBAT=3.7V

3.3 IO Input/Output Electrical Logical Characteristics

Table 3-3

IO input characteristics						
Symbol	**Parameter**	**Min**	**Typ**	**Max**	**Unit**	**Test Conditions**
V_{IL}	Low-Level Input Voltage	-0.3	_	0.3* VDDIO	V	VDDIO = 3.3V
V_{IH}	High-Level Input Voltage	0.7* VDDIO	_	VDDIO+0.3	V	VDDIO = 3.3V
IO output characteristics						
V_{OL}	Low-Level Output Voltage	_	_	0.33	V	VDDIO = 3.3V
V_{OH}	High-Level Output Voltage	2.7	_	_	V	VDDIO = 3.3V

ZHUHAI JIELI TECHNOLOGY CO., LTD

Confidential
The information contained herein is the exclusive property of JIELI and shall not be distributed, reproduced, or disclosed in whole or in part without prior written permission of JIELI.

3.4 Internal Resistor Characteristics

Table 3-4

Port	General Output	High Drive	Internal Pull-Up Resistor	Internal Pull-Down Resistor	Comment
PB0,PB1	8mA	64mA	10K	60K	1、PB0 & PB1 default pull down 2、internal pull-up/pull-down resistance | accuracy ±20%
PB9,PB11	8mA	_	10K	60K	

ZHUHAI JIELI TECHNOLOGY CO., LTD

Confidential
The information contained herein is the exclusive property of JIELI and shall not be distributed, reproduced, or disclosed in whole or in part without prior written permission of JIELI.

4 Package Information

4.1 SOP8

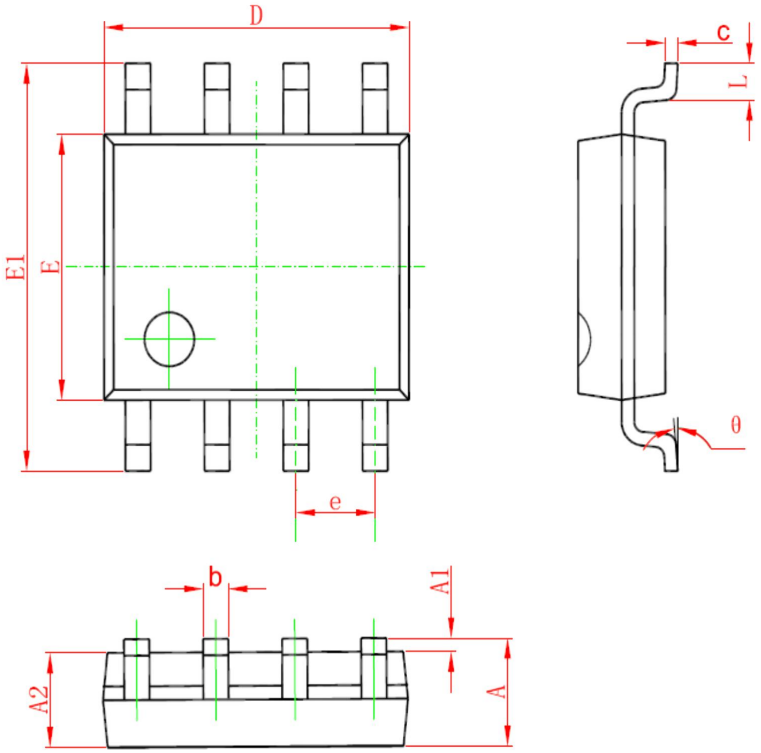

Symbol	Dimension In Millimeters		Dimension In Inches	
	Min	Max	Min	Max
A	1.350	1.750	0.053	0.069
A1	0.100	0.250	0.004	0.010
A2	1.350	1.550	0.053	0.061
b	0.330	0.510	0.013	0.020
c	0.170	0.250	0.007	0.010
D	4.700	5.100	0.185	0.201
E	3.800	4.000	0.150	0.157
E1	5.800	6.200	0.228	0.244
e	1.27TYP		0.050TYP	
L	0.400	1.270	0.016	0.050
θ	0^0	8^0	0^0	8^0

Figure 4-1. AD158A_SOP8 Package

Confidential
The information contained herein is the exclusive property of JIELI and shall not be distributed, reproduced, or disclosed in whole or in part without prior written permission of JIELI.

5 Package Type Specification

①Represents different packages

②Represents different memory sizes

2: 2Mbit Flash

4: 4Mbit Flash

ZHUHAI JIELI TECHNOLOGY CO., LTD

Confidential

The information contained herein is the exclusive property of JIELI and shall not be distributed, reproduced, or disclosed in whole or in part without prior written permission of JIELI.

6 Storage Condition

6.1 Moisture Sensitivity Level

AD158A is qualified to moisture sensitivity level MSL3 in accordance with JEDEC J-STD-033.

6.2 Storage Alert

1. Calculated shelf life in sealed bag 12 months at＜40°C and 90% relative humidity (RH).
2. Peak package body temperature≤260°C.
3. After bag is opened,devices that will be subjected to reflow solder or other high temperature process must be mounted within 168 hours of factory conditions≤30°C/60%RH or stored per J-STD-033.
4. Devices require bake before mounting if humidity indicator card reads＞10% for level 2a-5a devices or＞60% for level 2 devices when read at 23±5°C,or 3a or 3b are not met.

Please refer to IPC/JEDEC J-STD-033 for baking procedure if necessary.

ZHUHAI JIELI TECHNOLOGY CO., LTD

Confidential
The information contained herein is the exclusive property of JIELI and shall not be distributed, reproduced, or disclosed in whole or in part without prior written permission of JIELI.

7 Revision History

Date	Revision	Description
2021.03.18	V1.0	Initial Release
2021.08.23	V1.1	Modify pin definition
2023.03.23	V1.2	Modify the Features.
2024.11.20	V1.3	Add Block Diagram Add Storage Condition Update Features modification.

ZHUHAI JIELI TECHNOLOGY CO., LTD

Confidential
The information contained herein is the exclusive property of JIELI and shall not be distributed, reproduced, or disclosed in whole or in part without prior written permission of JIELI.