Optional selection of one of 8 master sectors either on PCB or external switches.

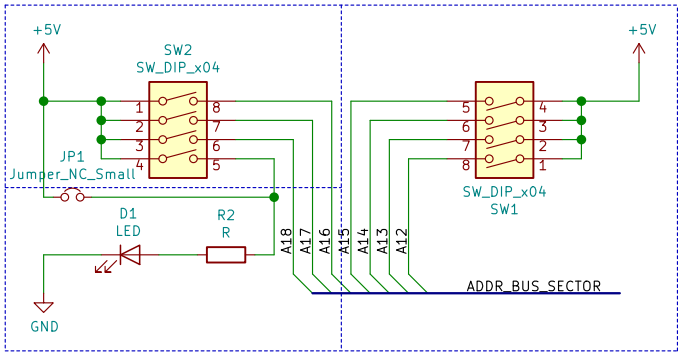

Manual selection of one of sixteen sectors.

THIS IS WORK IN PROGRESS AND MAY NOT REPRESENT THE DESIGN OF A RELEASE VERSION

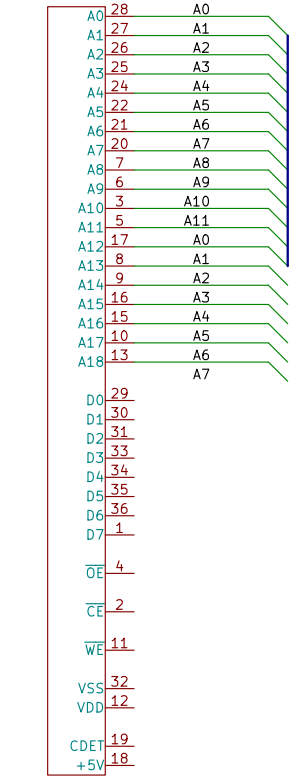

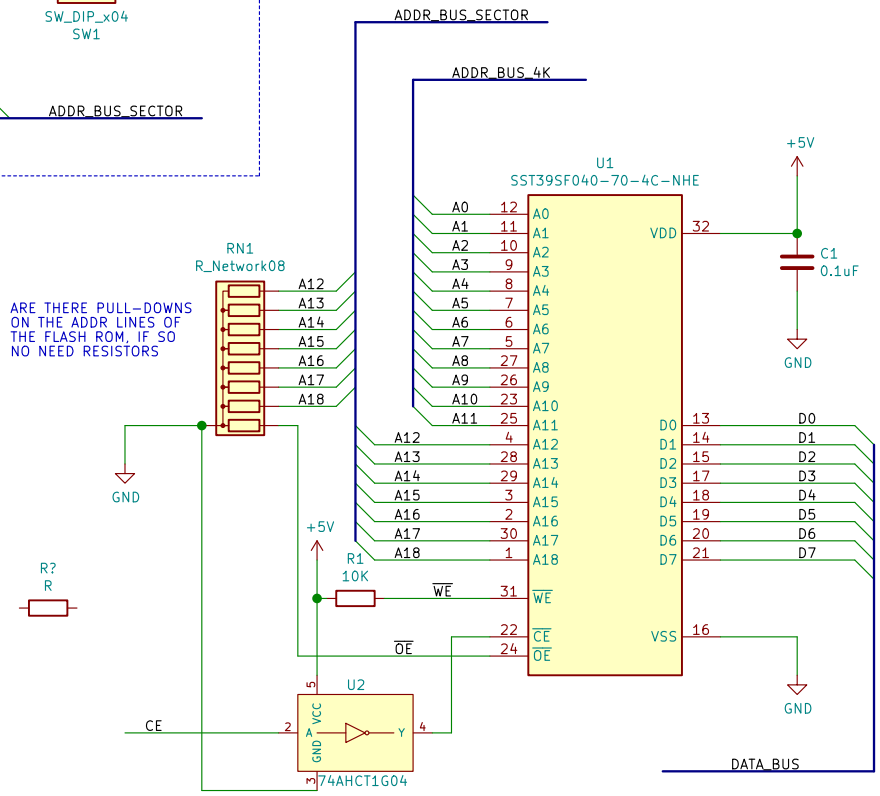

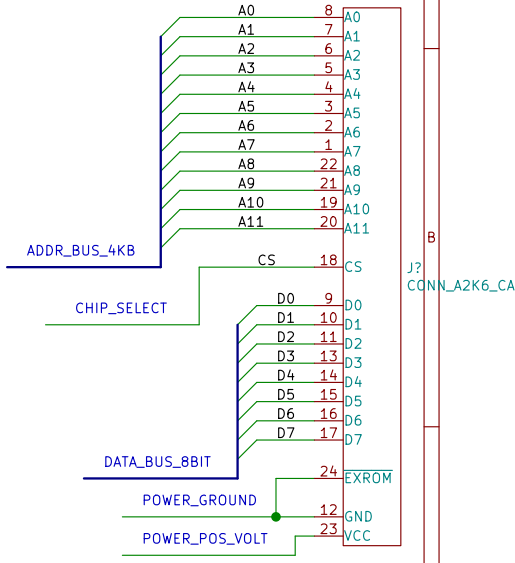

ADDR_BUS_4KB

Justin Lane (atari2600@jigglesoft.co.uk)
http://creativecommons.org/licenses/by/3.0/
CC Attribution 3.0 Unported
https://github.com/JiggleSoft/atari2600_cart_prog
JiggleSoft

Sheet: /
File: rom_cart.sch

Title: Atari 2600 Budget ROM Cartridge

Size: A4	Date:	Rev: 0.0.1
KiCad E.D.A. kicad (5.0.2)-1		Id: 1/1