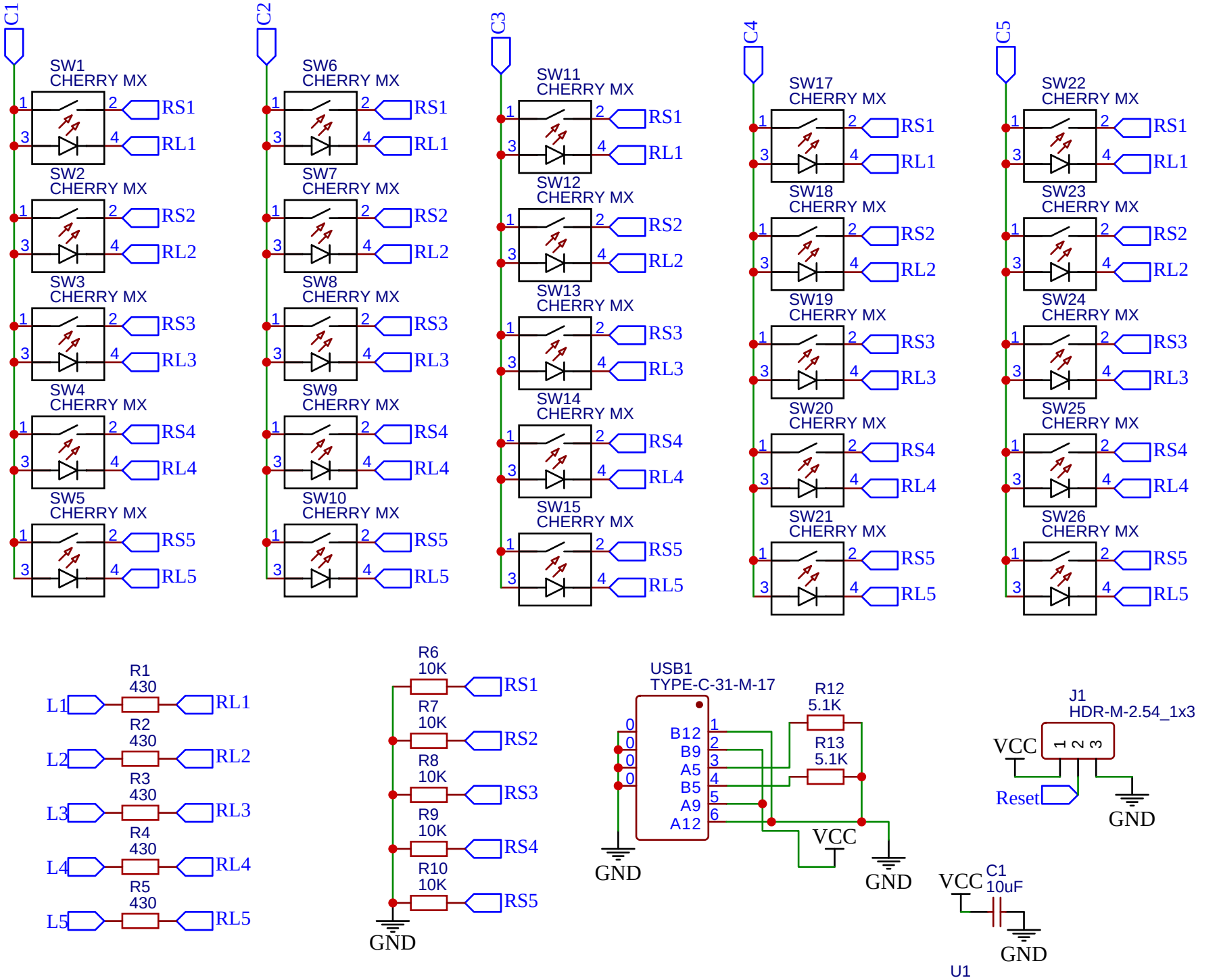

Lights Out With Mechanical Keys
By: Jim Heaney, www.jim-heaney.com
May 2021, V1.1