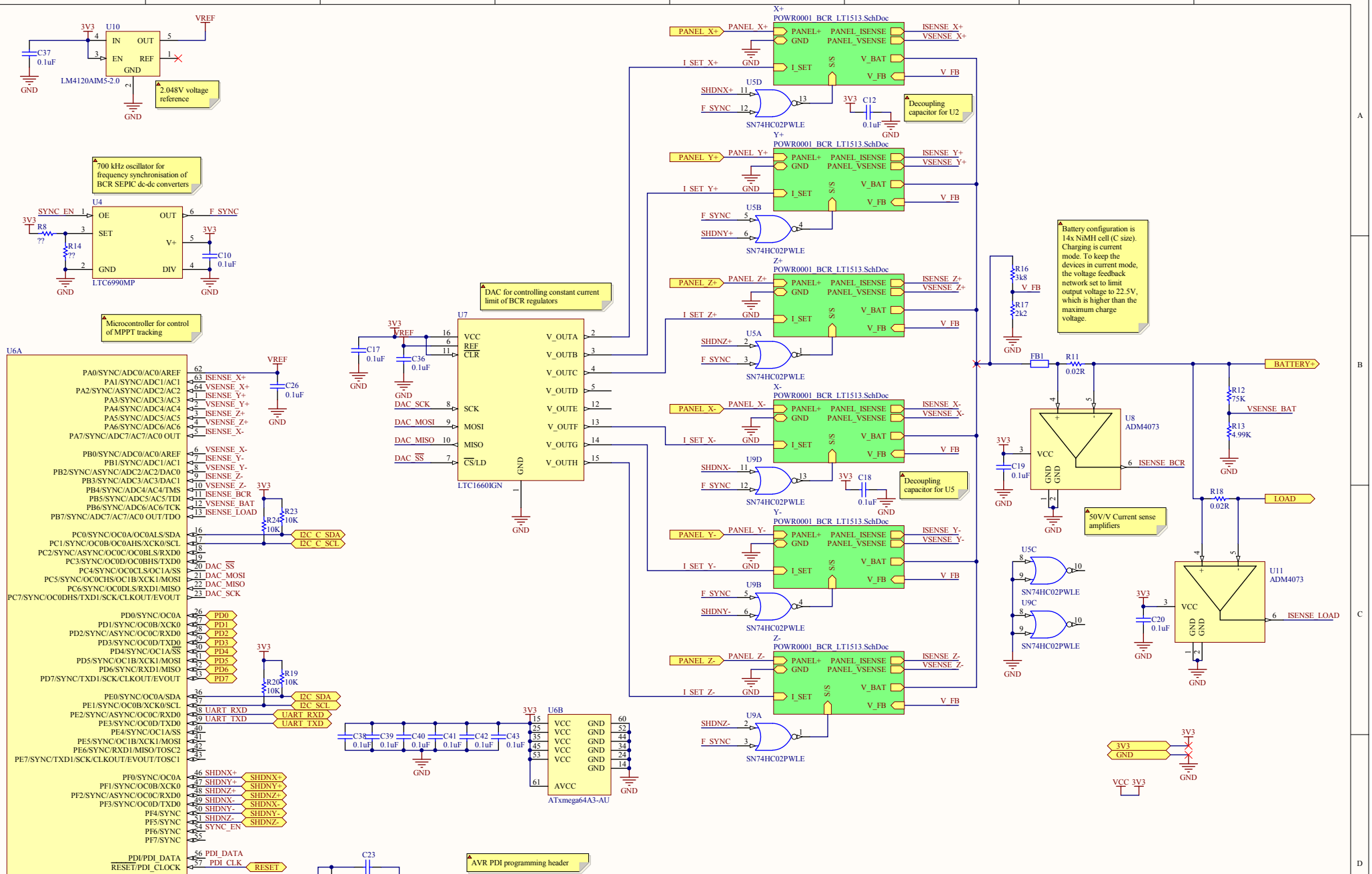

Title	*BLUEsat solar battery charge regulator subystem*
Description:	Solar battery charge regulator subsystem.
Author: Thomas Fisk	Drawing No.: POWR0008
Size: A3	Version 2.5
Date: 10/07/2012 Time: 11:39:53 AM	Sheet: 1 of 1
File: C:\Users\Thomas\Desktop\BCR Fork\July 2012 Revision\POWR0008_BCR_System.SchDoc	

BLUEsat Project
Room 419
School of EE&T
UNSW, NSW 2052
Australia

BLUESAT
UNSW STUDENT SATELLITE PROJECT