NO.	REVISION	DATE	APP.

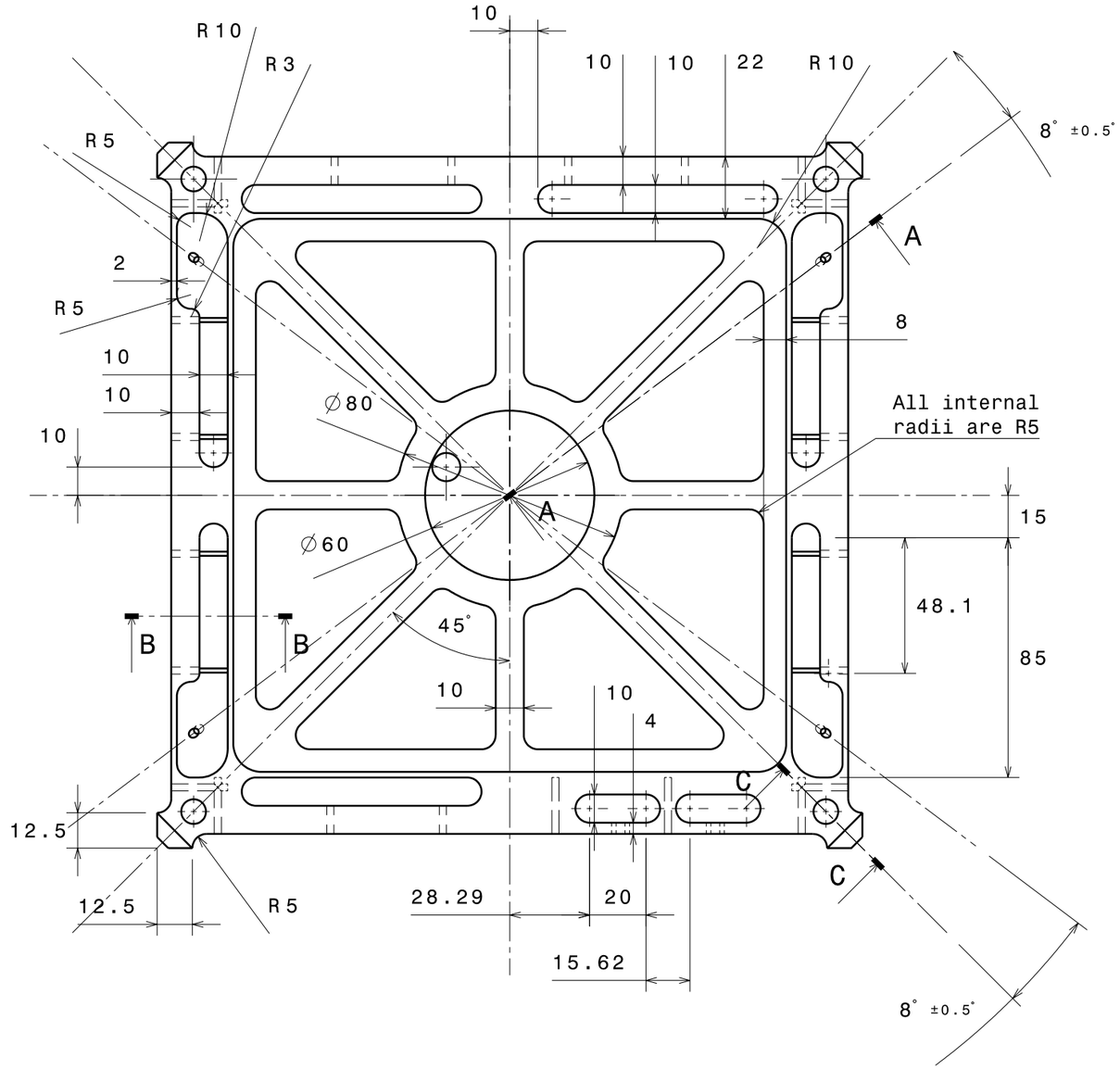

Top view (+z)

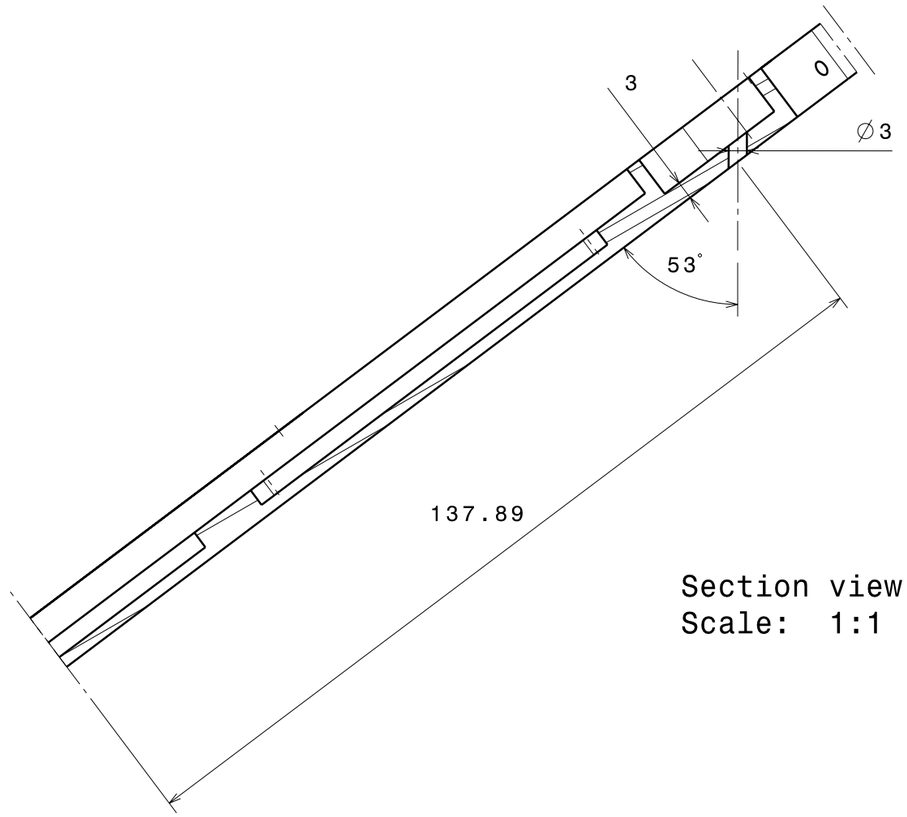

Section view A-A
Scale: 1:1

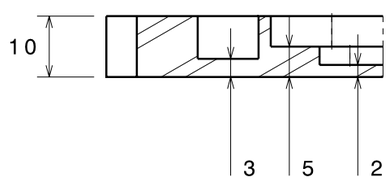

Section view B-B
Scale: 1:1

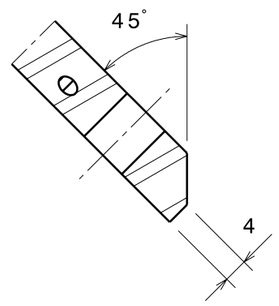

Section view C-C
Scale: 1:1

ALL DIMENSIONS ARE IN MM

TOLERANCES (UNLESS OTHERWISE SPECIFIED):
DIMENSIONS = ±.025
ANGLES = ±1°

CATIA DRAWING - TO BE MANUFACTURED USING CNC MILL, NOT MANUALLY
USE SYMMETRY TO CALCULATE DIMENSIONS

ULSSD BLUESAT UNSW STUDENT SATELLITE PROJECT

All dimensions are in mm

DRAWN	DATE
Christopher Hale	23/04/2008
MATERIAL: Aluminium 6061-T6	WEIGHT: 0.69 kg

TITLE

TRAY 0: BASEPLATE

SIZE	DWG. NO.	REV.
A3	MECH-0008-23April08	1.0
SCALE 1:2	RELEASED 05/05/2008	SHEET 1/2

This drawing is the property of BLUEsat. It may not be reproduced or communicated without our written agreement.

NO.	REVISION	DATE	APP.

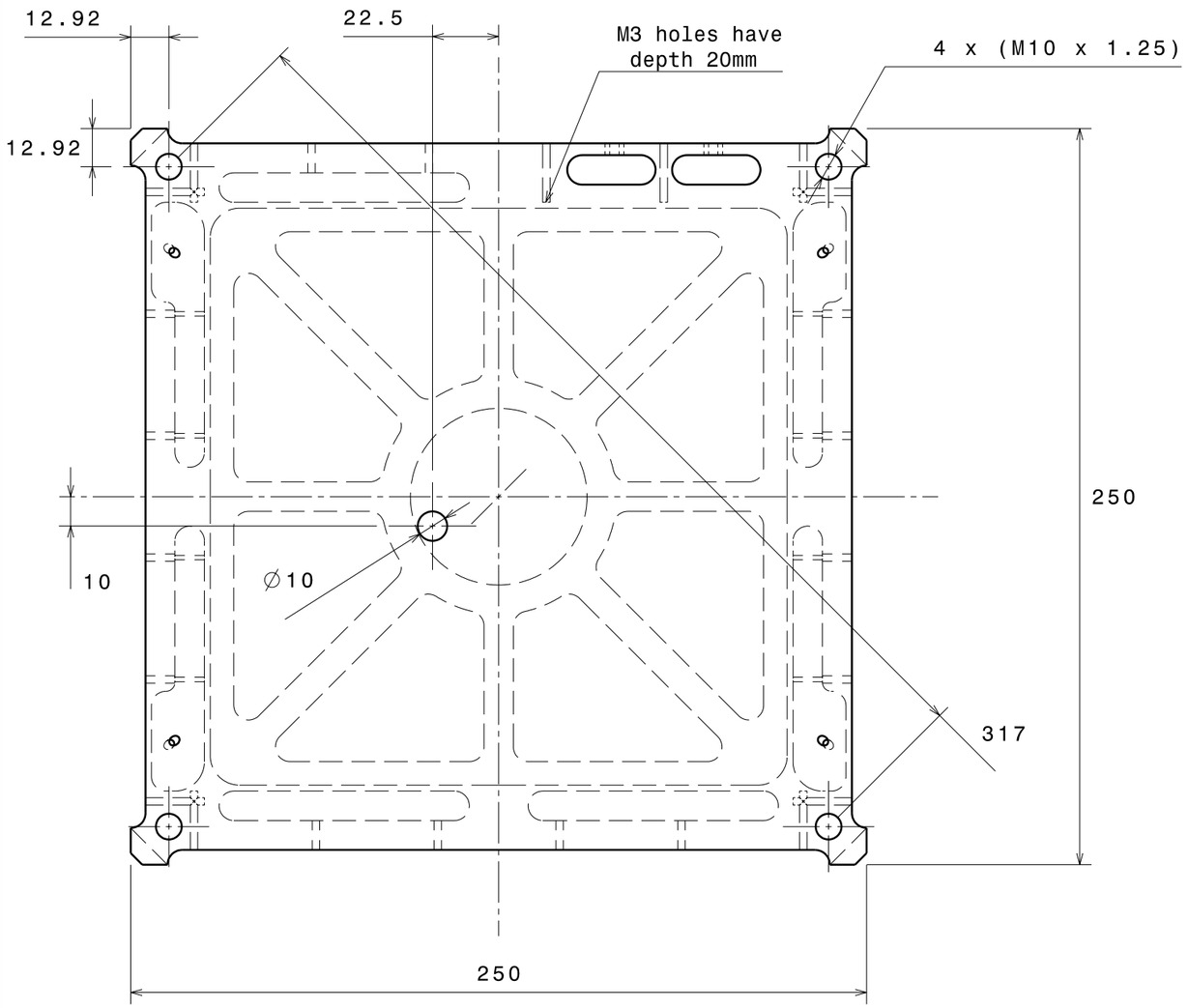

Bottom view (-z)

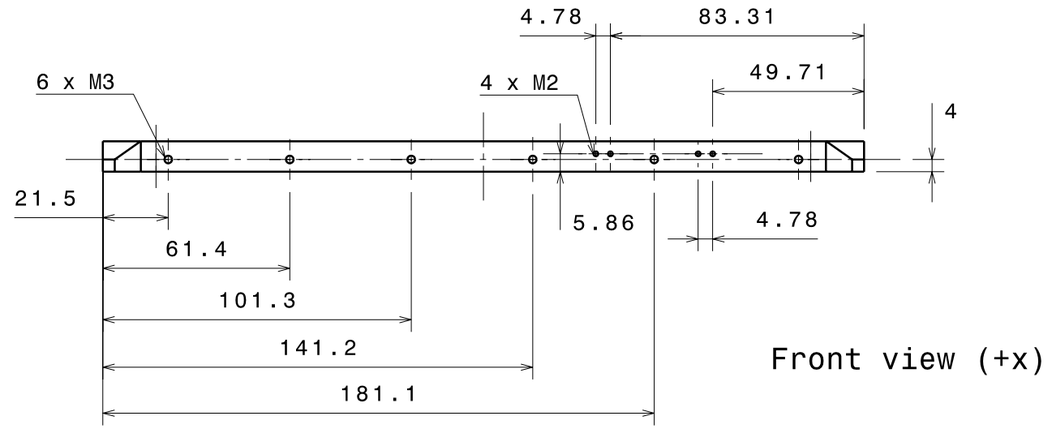

Front view (+x)

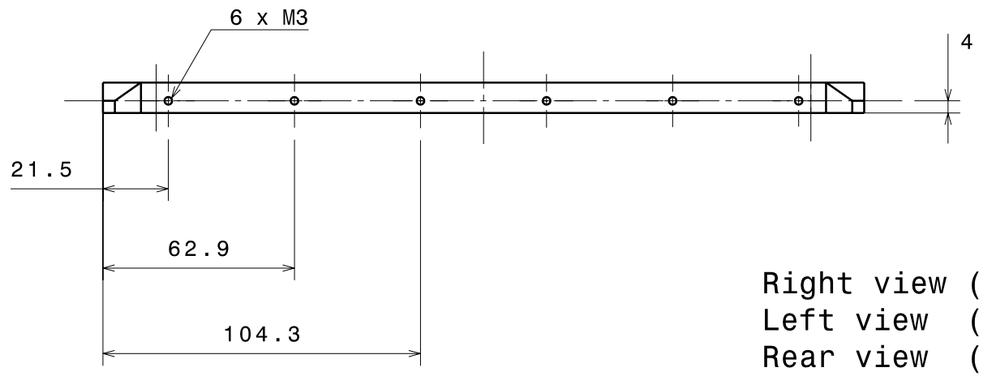

Right view (+y)
Left view (-y)
Rear view (-x)
(ALL IDENTICAL)

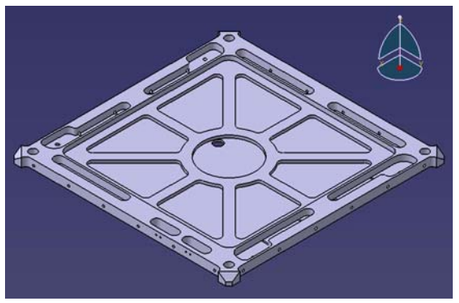

ALL DIMENSIONS ARE IN MM

TOLERANCES (UNLESS OTHERWISE SPECIFIED):
DIMENSIONS = ±.025
ANGLES = ±1°

CATIA DRAWING - TO BE MANUFACTURED USING CNC MILL, NOT MANUALLY
USE SYMMETRY TO CALCULATE DIMENSIONS

ULSSD BLUESAT UNSW STUDENT SATELLITE PROJECT

All dimensions are in mm

DRAWN: Christopher Hale	DATE: 23/04/2008	TITLE: TRAY 0: BASEPLATE	
MATERIAL: Aluminium 6061-T6	WEIGHT: 0.69 kg	SIZE: A3	DWG. NO.: MECH-0008-23April08 / REV.: 1.0
		SCALE: 1:2	RELEASED: 05/05/2008 / SHEET: 2/2

This drawing is the property of BLUEsat. It may not be reproduced or communicated without our written agreement.