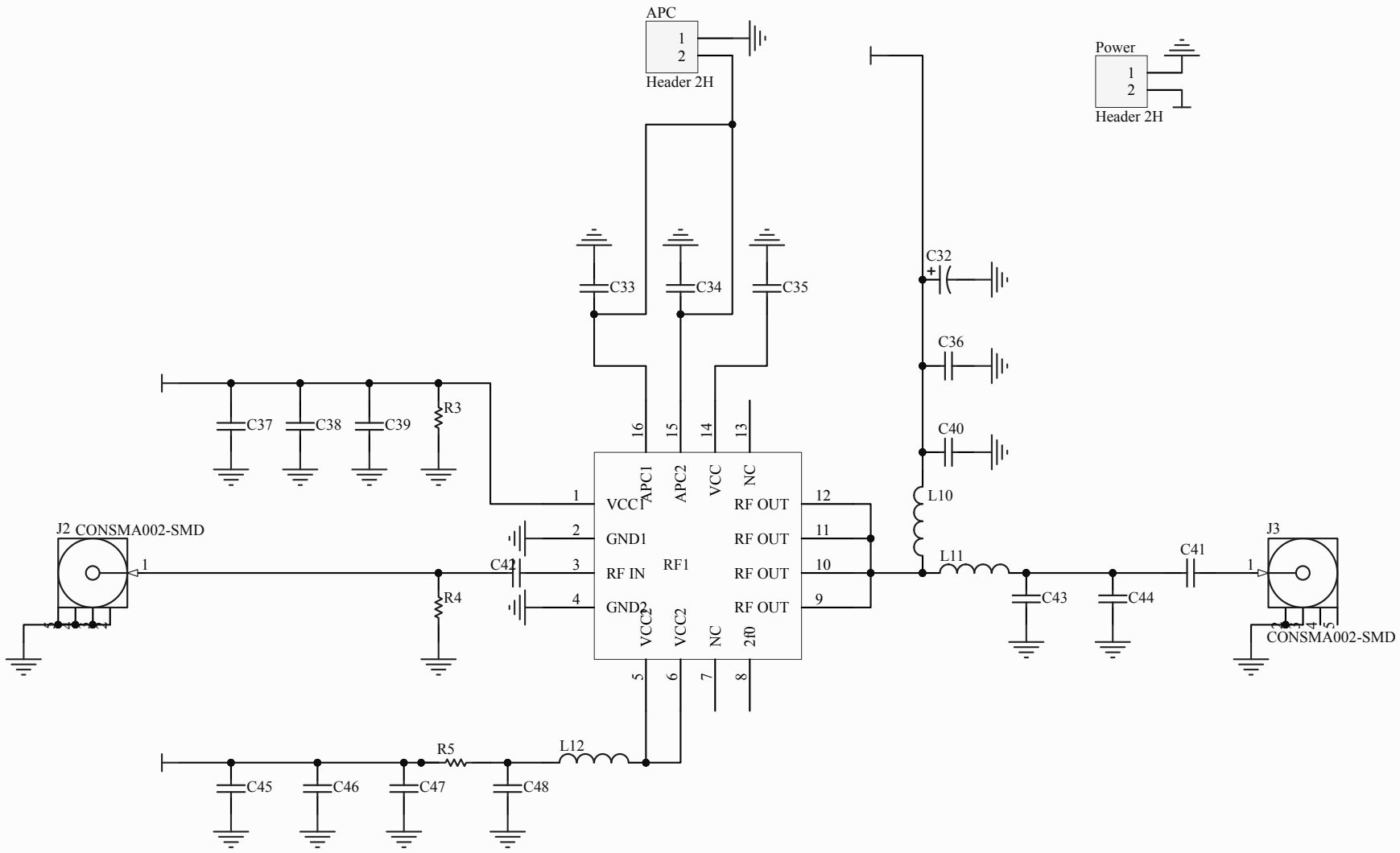

Title		
Size A	Number	Revision
Date: 12/5/2014		Sheet of
File: C:\DF - SL\..\SCH_RF5110G.SchDoc		Drawn By: