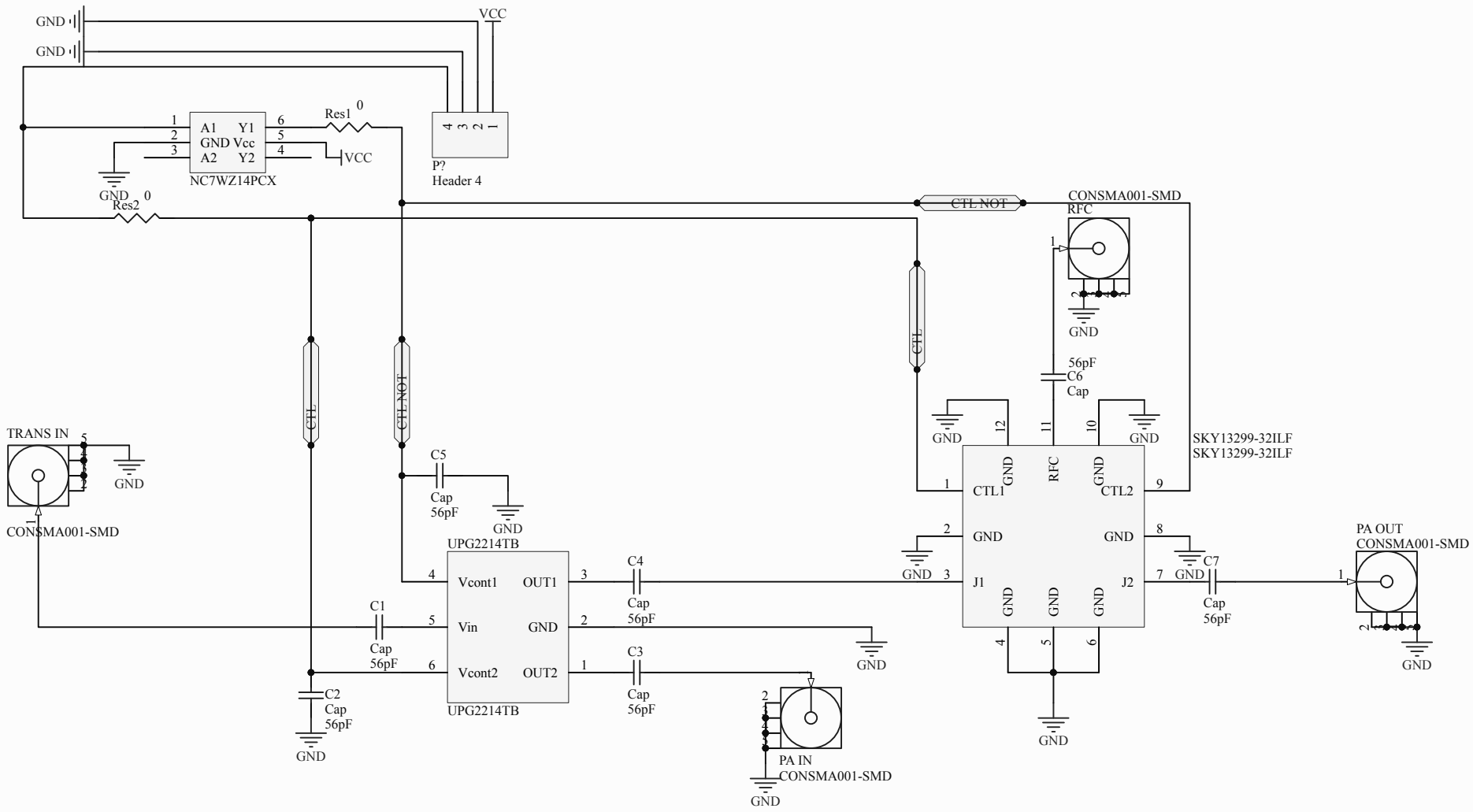

Title		
Size A4	Number	Revision
Date: 12/5/2014		Sheet of
File: C:\DF - SL\..\Switch_COMS.SchDoc		Drawn By: