NO.	REVISION	DATE	APP.
A	4 EXTRA M6 HOLE ADDED	4/2/2011	R.K

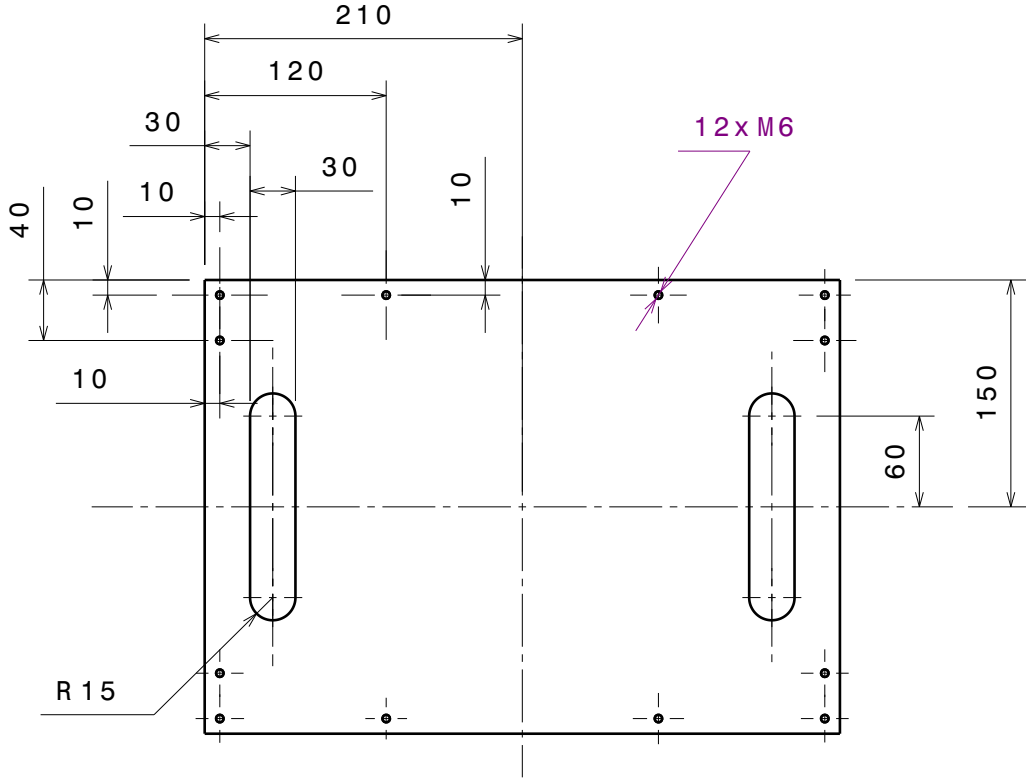

FRONT VIEW

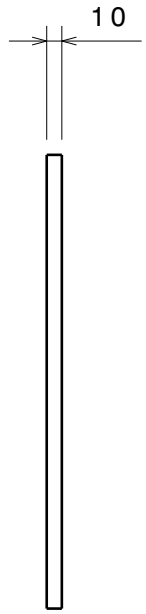

SIDE VIEW

TOLERANCES: (UNLESS OTHERWISE STATED)
DIMENSIONS: = ±0.1
ANGLES: = ±0.5°

CONTACT: RUIQI KE
0406562736
krqgrk32@gmail.com
MICHAEL JOHNSON
0400477360
michaelj_111@hotmail.com

BLUESAT
UNSW STUDENT SATELLITE PROJECT

All dimensions are in mm

DRAWN		DATE	11/2/2011
CHECKED		DATE	2/4/2011

TITLE

VIBRATION PLATE BASE

SIZE	DWG. NO.	REV.
A4	MECH-0207-2APR11	A

SCALE	RELEASED	SHEET
1:5	2/3/2011	1/5

This drawing is the property of BLUEsat. It may not be reproduced or communicated without our written agreement.