TYPE OF CONNECTOR	Width	Height	Inner Radius	Angle	Hole Diameter	Hole Height	Hole Distance
DE 9-pin D-subminiature	20.47	11.4	3.35	100	3.04	5.71	2.26
DA 15-pin D-subminiature	28.8	11.4	3.35	100	3.04	5.71	2.26
DB 25-pin D-subminiature	42.51	11.4	3.35	100	3.04	5.71	2.265
DC 37-pin D-subminiature	59.08	11.4	3.35	100	3.04	5.71	2.21

NOTE: The subminiature D-connectors used were obtained from ITT Cannon and are standard, rear mounting connectors. Refer to page 221 of "CO_dsub.pdf" for futher info.

TYPE OF CONNECTOR	Top Width	Mid Width	Height	Inner Radius	Angle	Foot Height
DE 9-pin D-microminiature	10.19	14.48	6.4	1.13	116	2.26

NOTE: The microminiature D-connectors used were obtained from ITT Cannon and are metal shell 0.050" contact spacing and rear mounting connectors. Refer to page 235 of "MDM.pdf" for futher info.

NOTE: All lengths are in mm
All angles are in degrees

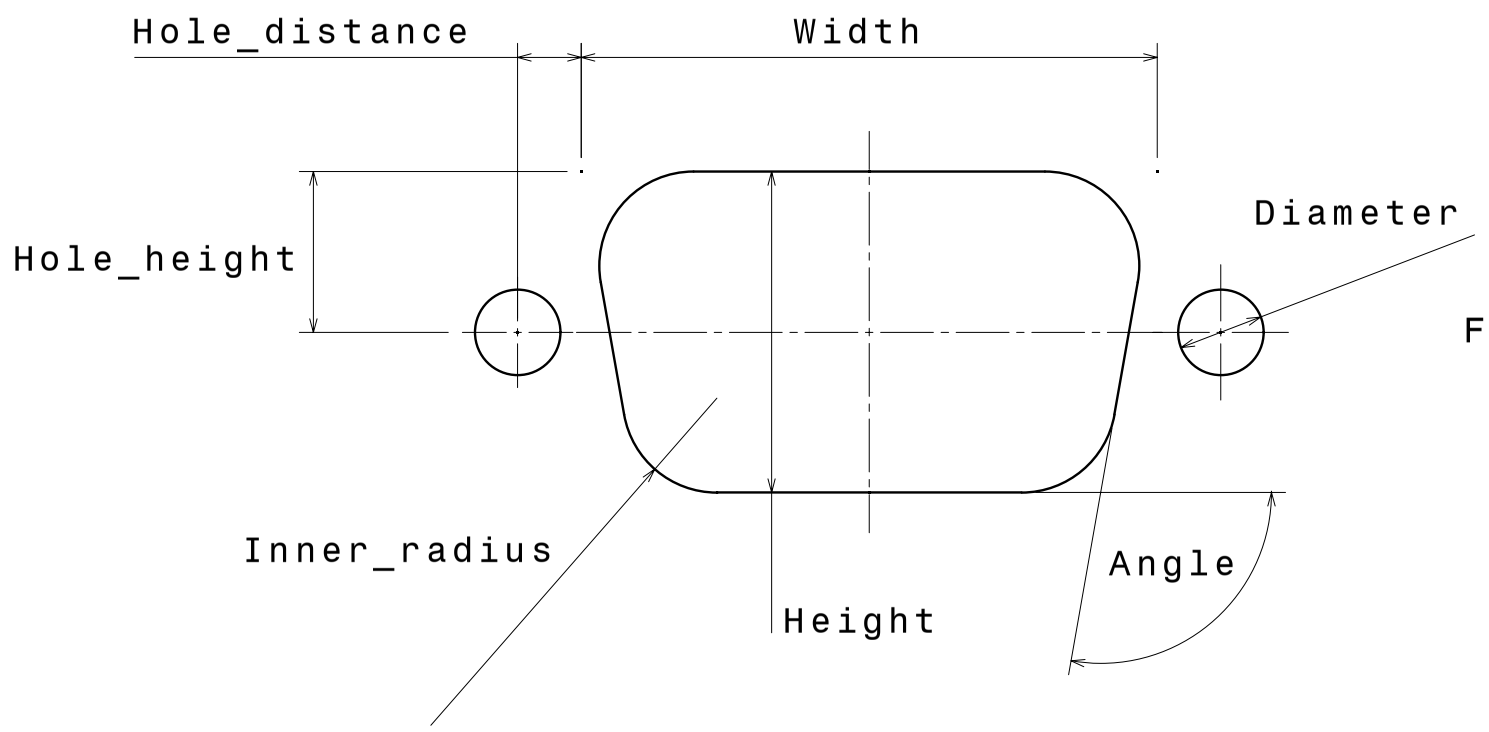

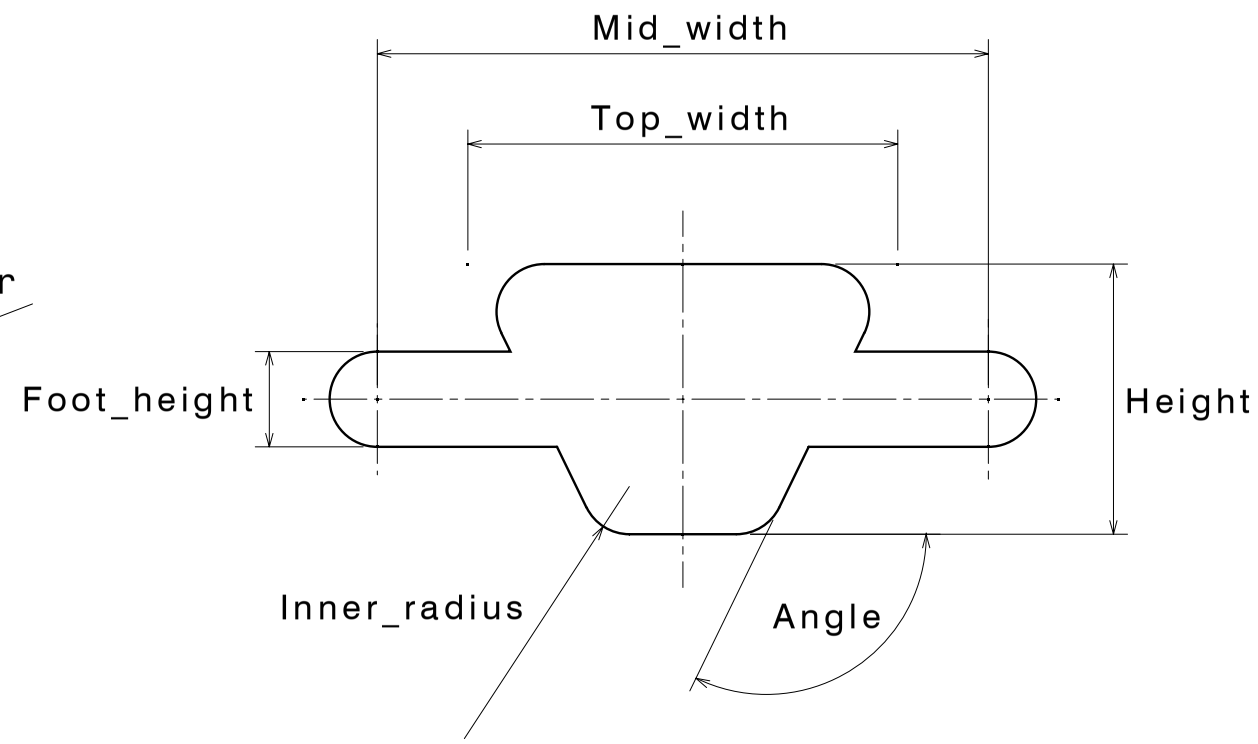

NOTE: In the CATIA model, the pin type preceeds the above dimensions. ie, for the width of a 15-pin D-subminiature connector, the dimensions would be referenced as "D15pin_width". Similarly, for the inner radius of a 9-pin micro-D connector, the dimension would be referenced as "D9pin_micro_inner_radius".

DESIGNED BY: Christopher Hales DATE: 4/02/2005		D-CONNECTOR DIMENSIONS		
CHECKED BY: XXX DATE: XXX				
SIZE A3		Structure 2005	BLUEsat PROJECT UNSW Student Satellite	
SCALE - - -	WEIGHT (kg) - - -	MATERIALS - - -	REV 0.1	SHEET 1/1

This drawing is the property of BLUEsat; it may not be reproduced or communicated without our written agreement.