NO.	REVISION	DATE	APP.

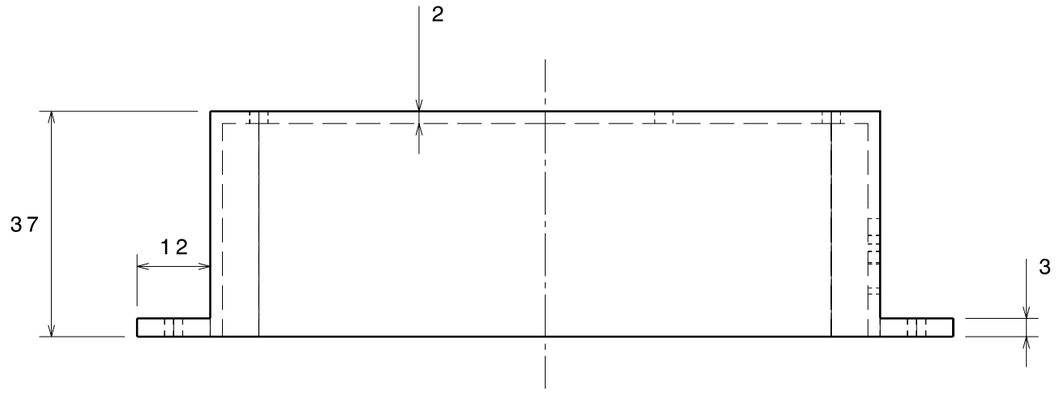

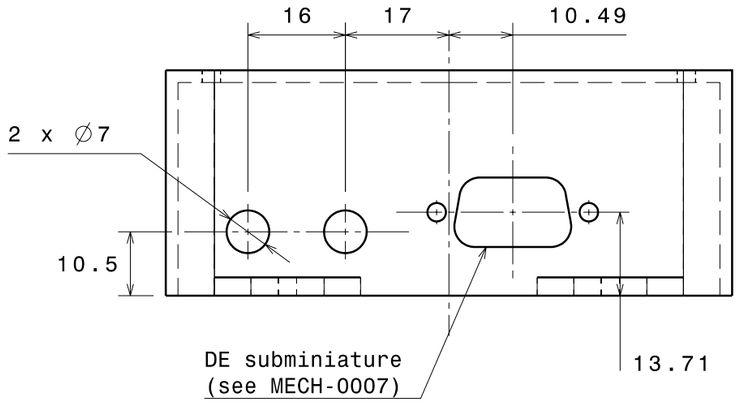

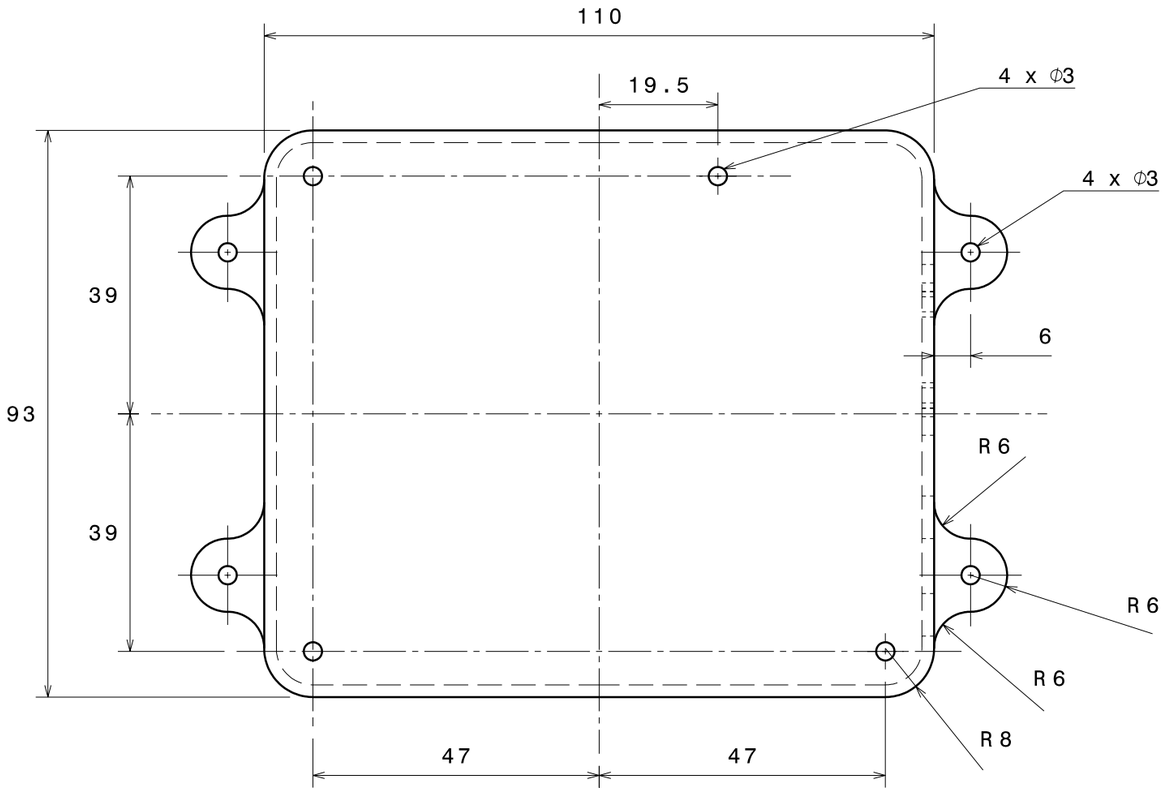

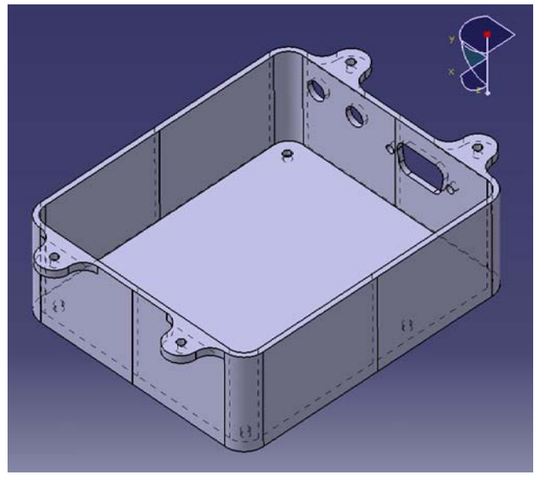

ALL DIMENSIONS ARE IN MM

TOLERANCES (UNLESS OTHERWISE SPECIFIED):
DIMENSIONS = ±.025
ANGLES = ±1°

CATIA DRAWING - TO BE MANUFACTURED USING CNC MILL, NOT MANUALLY
USE SYMMETRY TO CALCULATE DIMENSIONS

ULSSD BLUESAT UNSW STUDENT SATELLITE PROJECT

All dimensions are in mm

DRAWN	DATE	TITLE		
Christopher Hale	29/4/2008	RECEIVER HOUSINGS		
MATERIAL: Aluminium 6061-T6	WEIGHT: 0.13 kg	SIZE: A3	DWG. NO.: MECH-0015-29April08	REV.: 1.0
		SCALE: 1:1	RELEASED: 05/05/2008	SHEET: 1/1

This drawing is the property of BLUEsat. It may not be reproduced or communicated without our written agreement.