NO.	REVISION	DATE	APP.

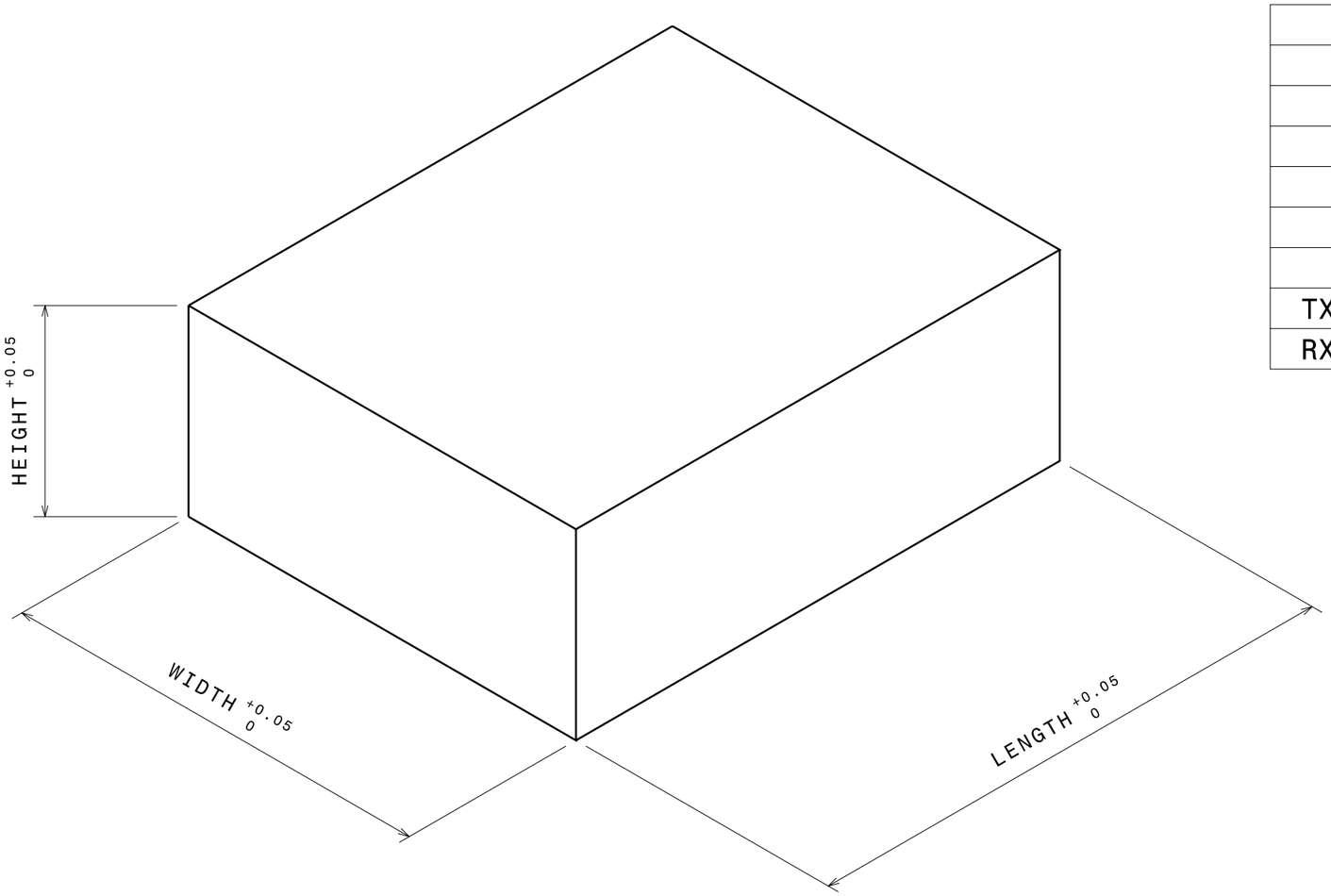

PART	HEIGHT	WIDTH	LENGTH	NO. REQUIRED
Tray 0	10	250	250	1
Tray 1	57	240	240	1
Tray 2	37	240	240	1
Tray 3	52	240	240	1
Tray 4	37	240	240	1
Tray 5	57	240	240	1
TX Housing	37	84	159	2
RX Housing	37	93	134	2

NOTES: 1) ALL sides are to be machined
2) Please contact me once billets have been sized so I can mark axes on them before CNC milling begins

CONTACT: Chris Hales
0409 718 568
chales@bluesat.unsw.edu.au

ALL DIMENSIONS ARE IN MM

TOLERANCES (UNLESS OTHERWISE SPECIFIED):
DIMENSIONS = ±.025
ANGLES = ±1°

CATIA DRAWING - TO BE MANUFACTURED USING CNC MILL, NOT MANUALLY
USE SYMMETRY TO CALCULATE DIMENSIONS

ULSSD BLUESAT UNSW STUDENT SATELLITE PROJECT

All dimensions are in mm

DRAWN: Christopher Hales
DATE: 29/4/2008
MATERIAL: Aluminium 6061-T6
WEIGHT: -- kg

TITLE: REQUIRED BILLET SIZES

SIZE: A3
DWG. NO.: MECH-0200-23May08
REV.: 1.0
SCALE: -:-
RELEASED: 05/05/2008
SHEET: 1/1

This drawing is the property of BLUEsat. It may not be reproduced or communicated without our written agreement.

NO.	REVISION	DATE	APP.

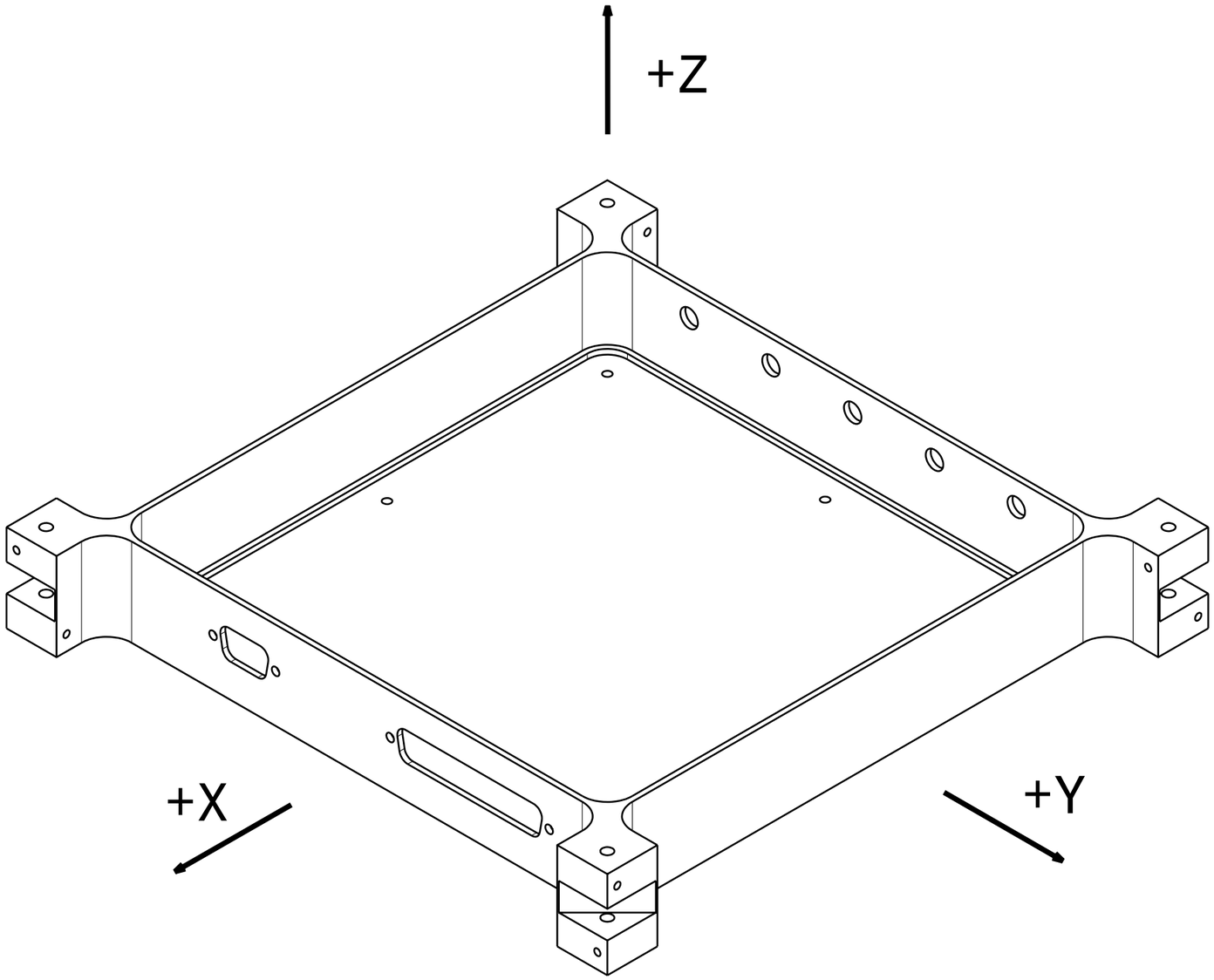

NOTES:
1) The tray on the left is representative of the general layout of all trays T1-T5, with D-connectors on the +X face, the upright tray pointing in the +Z direction, and the +Y axis forming a right-handed co-ordinate system.
2) The tools to be used are:
   - T1 = End Mill D20
   - T2 = Ball Nose End Mill D12
   - T3 = End Mill D10
   - T4 = Center Drill D2
   - T5 = Drill D2.5
   - T6 = Drill D3.1
   - T7 = Drill D10
   - T8 = End Mill D4
   - T9 = Drill D7
   - T10 = End Mill D12
   - T11 = Drill D3
   - T12 = Drill D4 (long series)
   - T13 = Drill D8
   - T14 = End Mill D2
   - T15 = Conical Mill D0.1
   - T16 = Drill D8.75
   - T17 = Ball Nose End Mill D8

ALL DIMENSIONS ARE IN MM

TOLERANCES (UNLESS OTHERWISE SPECIFIED):
DIMENSIONS = ±.025
ANGLES = ±1°

CATIA DRAWING - TO BE MANUFACTURED USING CNC MILL, NOT MANUALLY
USE SYMMETRY TO CALCULATE DIMENSIONS

ULSSD BLUESAT UNSW STUDENT SATELLITE PROJECT

All dimensions are in mm

DRAWN	DATE
Christopher Hale	9/5/2008
MATERIAL	WEIGHT
Aluminium 6061-T6	---

TITLE

MACHINING INFO FOR TRAYS T1-T5

SIZE	DWG. NO.	REV.
A3	MECH-0205-23May08	1.0
SCALE ---	RELEASED 09/05/2008	SHEET 1/2

This drawing is the property of BLUEsat. It may not be reproduced or communicated without our written agreement.

NO.	REVISION	DATE	APP.

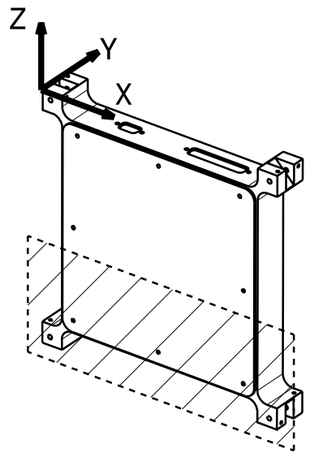

PROCESS 1 - POSX

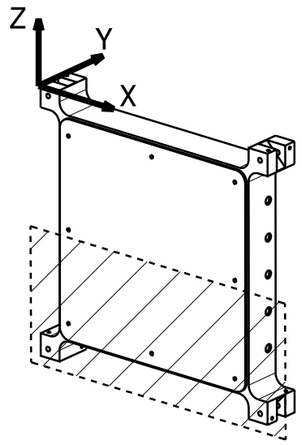

PROCESS 2 - POSY

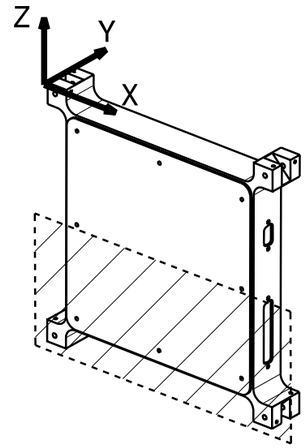

PROCESS 3 - NEGY

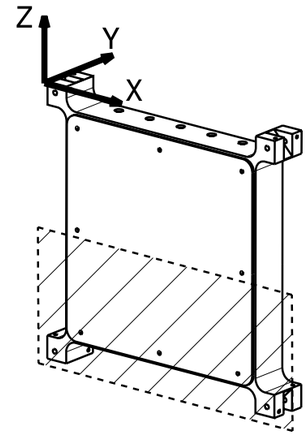

PROCESS 4 - NEGX

NOTES:
1) The name of each process refers to the face of the tray being machined
2) The machining axes for each process, as shown, have been placed according to the original stock material. ALWAYS use the outermost dimensions for setting up the machining axes
3) The machining axes align the Z-axis with the tool axis, and the X-axis along the longest dimension for the process face. Also note the location of the D-connectors when positioning for processes 5 and 6
4) All but process 6 use a vice grip to hold the stock material. The shaded areas indicate the placement for one side of this symmetric clamp. For process 6, small clamps should be used to hold down the corners of the tray

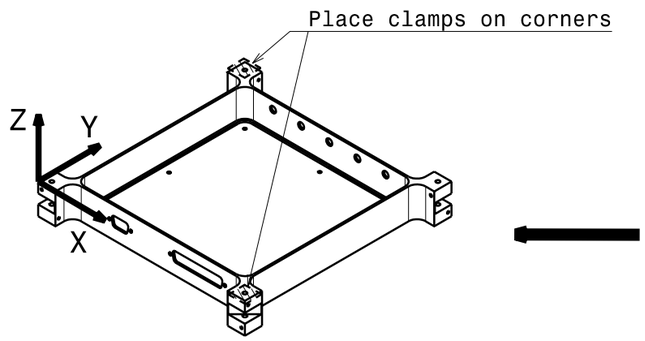

PROCESS 6 - POSZ

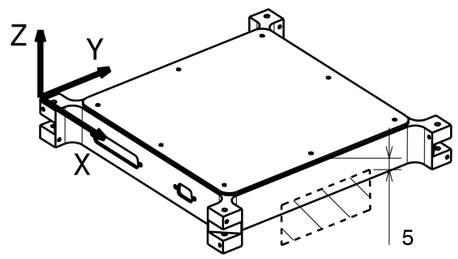

PROCESS 5 - NEGZ

ALL DIMENSIONS ARE IN MM

TOLERANCES (UNLESS OTHERWISE SPECIFIED):
DIMENSIONS = ±.025
ANGLES = ±1°

CATIA DRAWING - TO BE MANUFACTURED USING CNC MILL, NOT MANUALLY
USE SYMMETRY TO CALCULATE DIMENSIONS

ULSSD BLUESAT UNSW STUDENT SATELLITE PROJECT

All dimensions are in mm

DRAWN	DATE
Christopher Hale	9/5/2008
MATERIAL: Aluminium 6061-T6	WEIGHT: ---

TITLE: MACHINING INFO FOR TRAYS T1-T5

SIZE	DWG. NO.	REV.
A3	MECH-0205-23May08	1.0
SCALE: ---	RELEASED: 09/05/2008	SHEET: 2/2

This drawing is the property of BLUEsat. It may not be reproduced or communicated without our written agreement.

NO.	REVISION	DATE	APP.

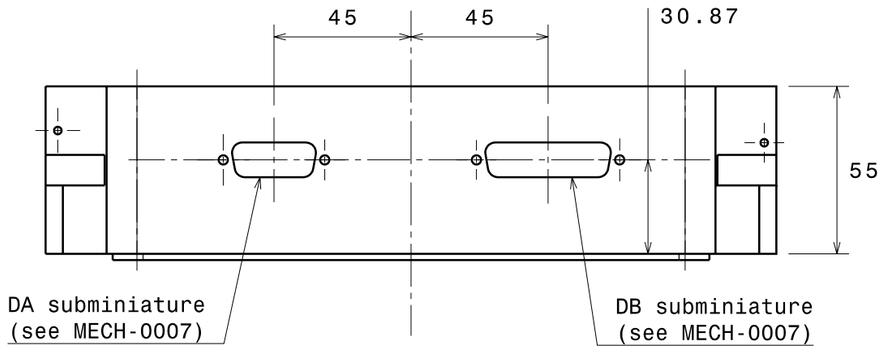

Front view (+x)

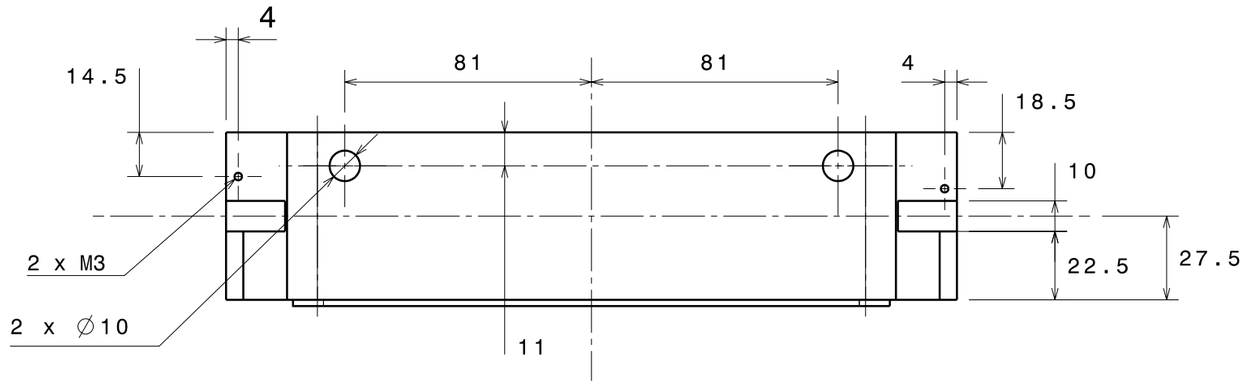

Right view (+y)
Left view (-y)
(BOTH IDENTICAL)

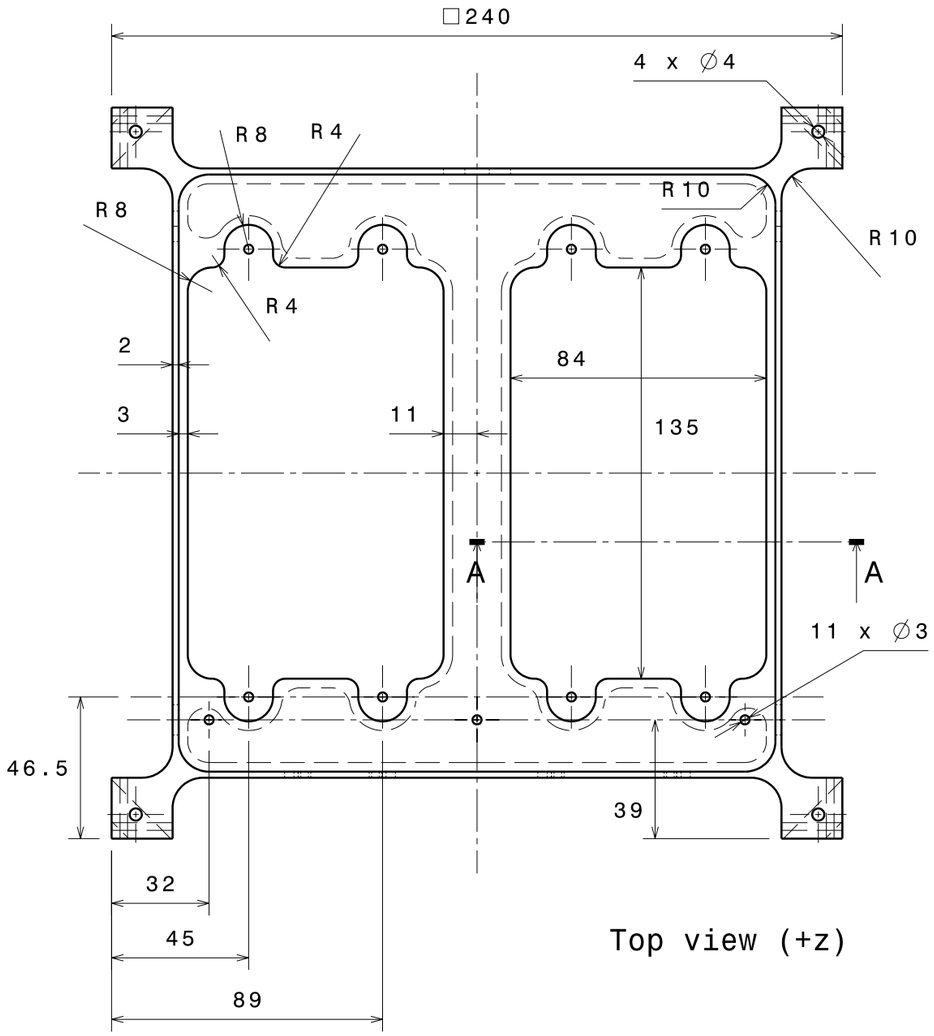

Top view (+z)

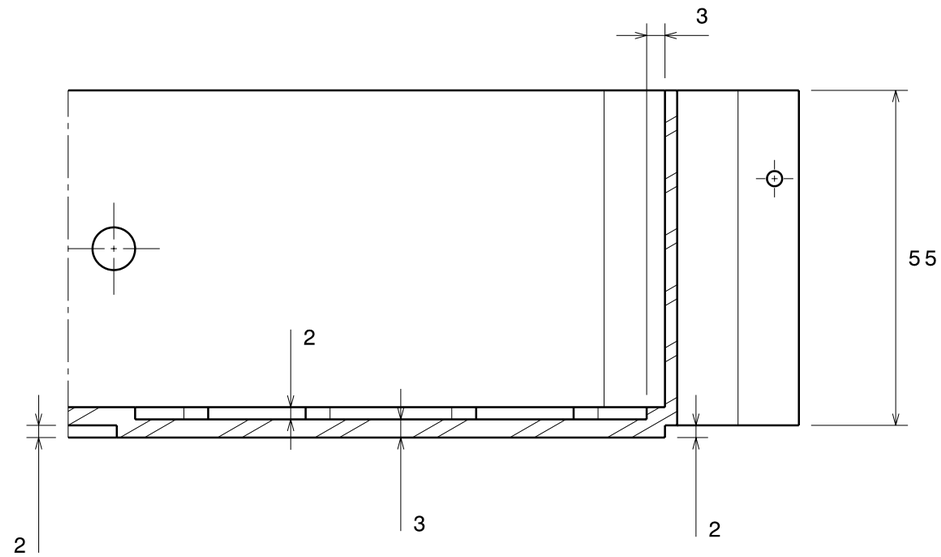

Section view A-A
Scale: 1:1

ALL DIMENSIONS ARE IN MM

TOLERANCES (UNLESS OTHERWISE SPECIFIED):
DIMENSIONS = ±.025
ANGLES = ±1°

CATIA DRAWING - TO BE MANUFACTURED USING CNC MILL, NOT MANUALLY
USE SYMMETRY TO CALCULATE DIMENSIONS

ULSSD BLUESAT UNSW STUDENT SATELLITE PROJECT

All dimensions are in mm

DRAWN: Christopher Hale	DATE: 24/04/2008
MATERIAL: Aluminium 6061-T6	WEIGHT: 0.81 kg

TITLE

TRAY 1: TRANSMITTERS

SIZE	DWG. NO.	REV.
A3	MECH-0009-24April08	1.0
SCALE 1:2	RELEASED 05/05/2008	SHEET 1/2

This drawing is the property of BLUEsat. It may not be reproduced or communicated without our written agreement.

NO.	REVISION	DATE	APP.

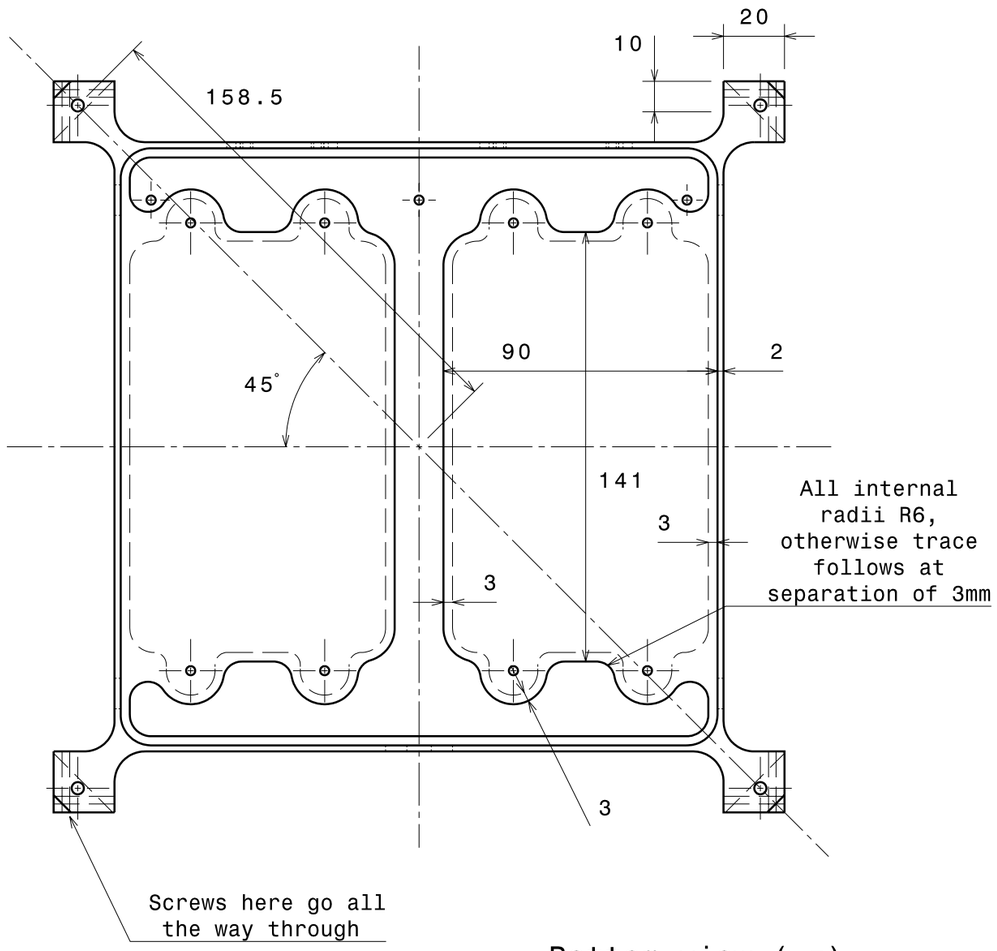

Bottom view (-z)

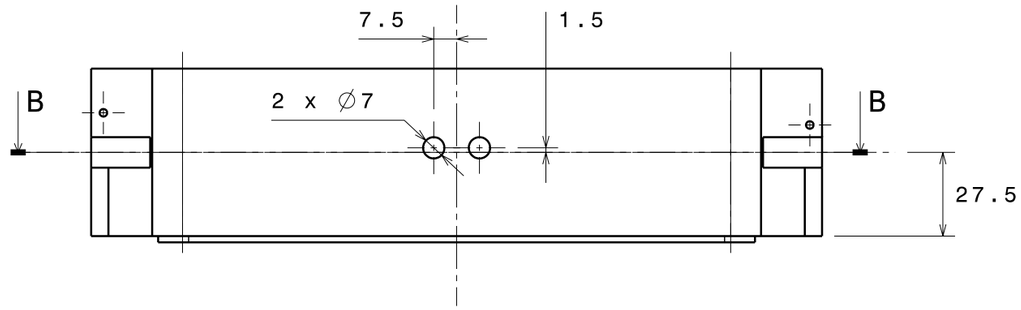

Rear view (-x)

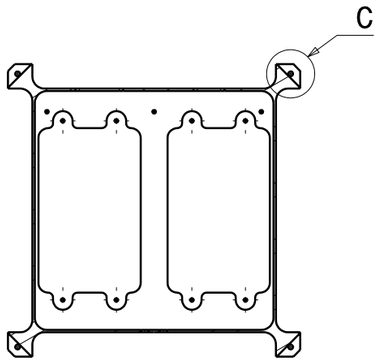

Section view B-B
Scale: 1:5

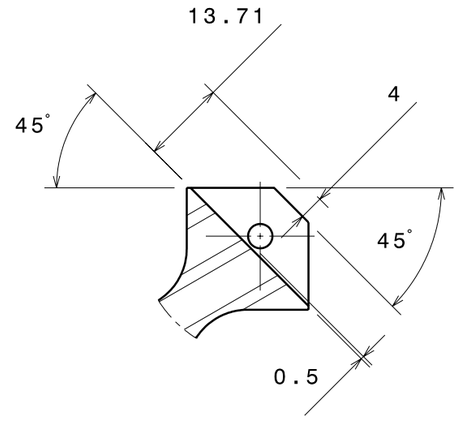

Detail C
Scale: 1:1

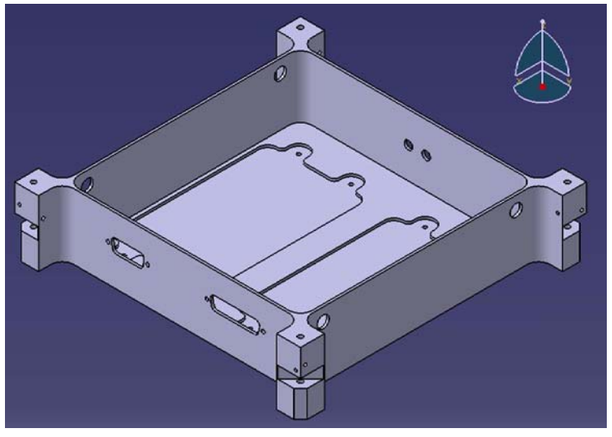

ALL DIMENSIONS ARE IN MM

TOLERANCES (UNLESS OTHERWISE SPECIFIED):
DIMENSIONS = ±.025
ANGLES = ±1°

CATIA DRAWING - TO BE MANUFACTURED USING CNC MILL, NOT MANUALLY
USE SYMMETRY TO CALCULATE DIMENSIONS

ULSSD BLUESAT UNSW STUDENT SATELLITE PROJECT

All dimensions are in mm

DRAWN	DATE	TITLE		
Christophe Hale	24/04/2008	TRAY 1: TRANSMITTERS		
MATERIAL: Aluminium 6061-T6	WEIGHT: 0.81 kg	SIZE: A3	DWG. NO.: MECH-0009-24April08	REV.: 1.0
		SCALE: 1:2	RELEASED: 05/05/2008	SHEET: 2/2

This drawing is the property of BLUEsat. It may not be reproduced or communicated without our written agreement.

NO.	REVISION	DATE	APP.

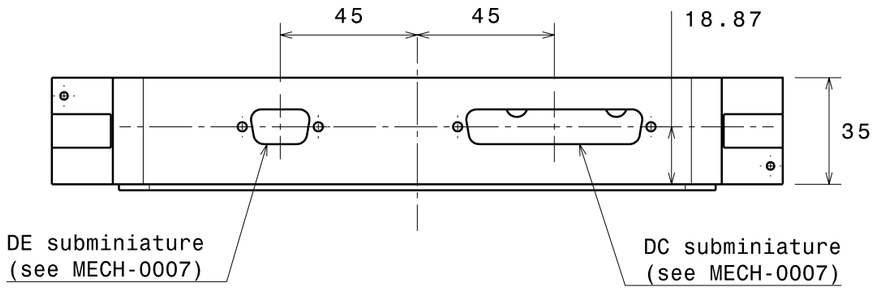

Front view (+x)

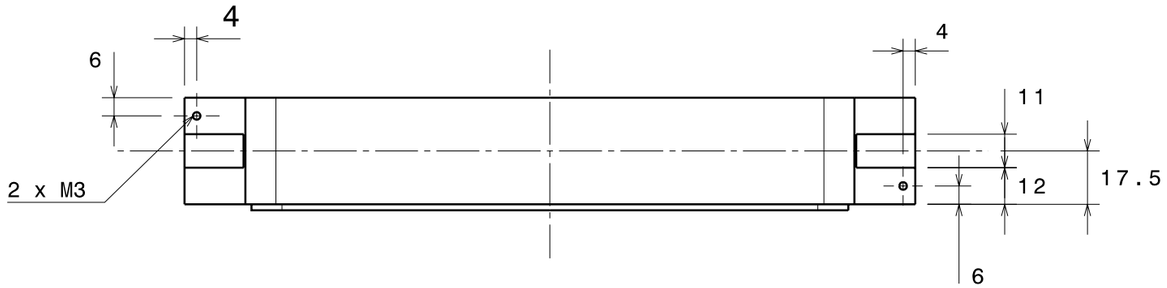

Right view (+y)
Left view (-y)
(BOTH IDENTICAL)

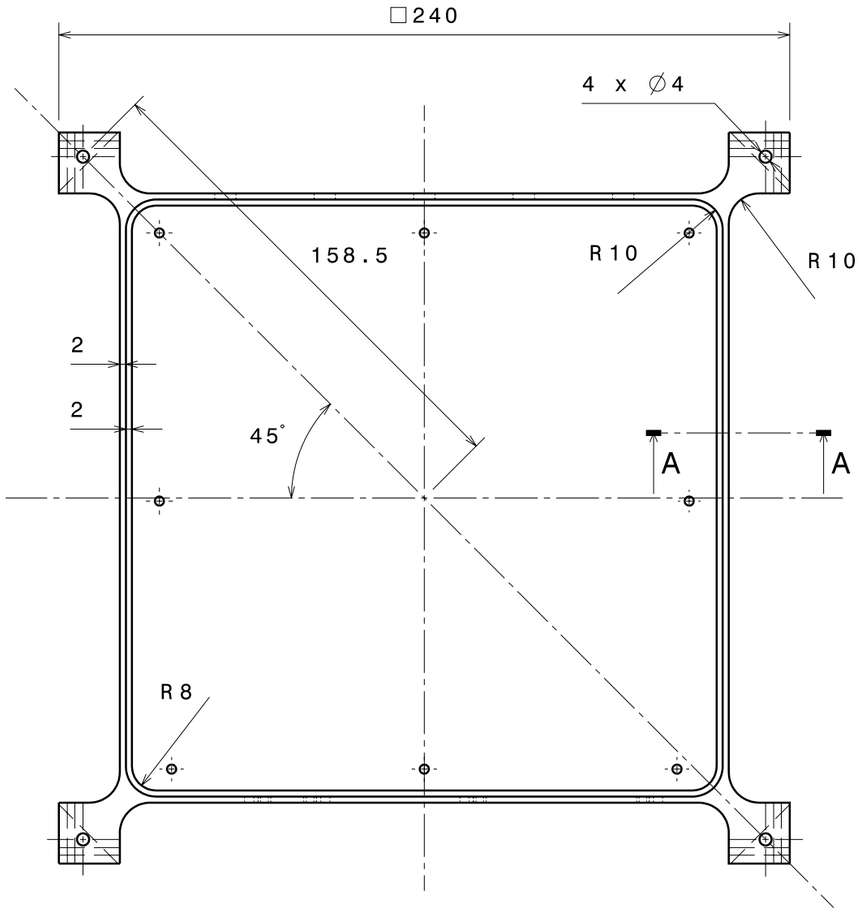

Top view (+z)

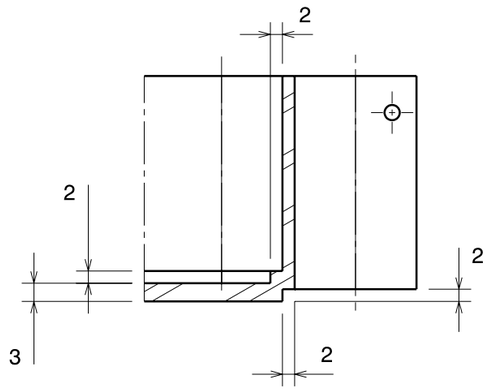

Section view A-A
Scale: 1:1

ALL DIMENSIONS ARE IN MM

TOLERANCES (UNLESS OTHERWISE SPECIFIED):
DIMENSIONS = ±.025
ANGLES = ±1°

CATIA DRAWING - TO BE MANUFACTURED USING CNC MILL, NOT MANUALLY
USE SYMMETRY TO CALCULATE DIMENSIONS

ULSSD BLUESAT UNSW STUDENT SATELLITE PROJECT

All dimensions are in mm

DRAWN	DATE	TITLE		
Christopher Hale	28/4/2008	TRAY 2: FLIGHT COMPUTER		
MATERIAL: Aluminium 6061-T6	WEIGHT: 0.61 kg	SIZE: A3	DWG. NO.: MECH-0010-28April08	REV.: 1.0
		SCALE: 1:2	RELEASED: 05/05/2008	SHEET: 1/2

This drawing is the property of BLUEsat. It may not be reproduced or communicated without our written agreement.

NO.	REVISION	DATE	APP.

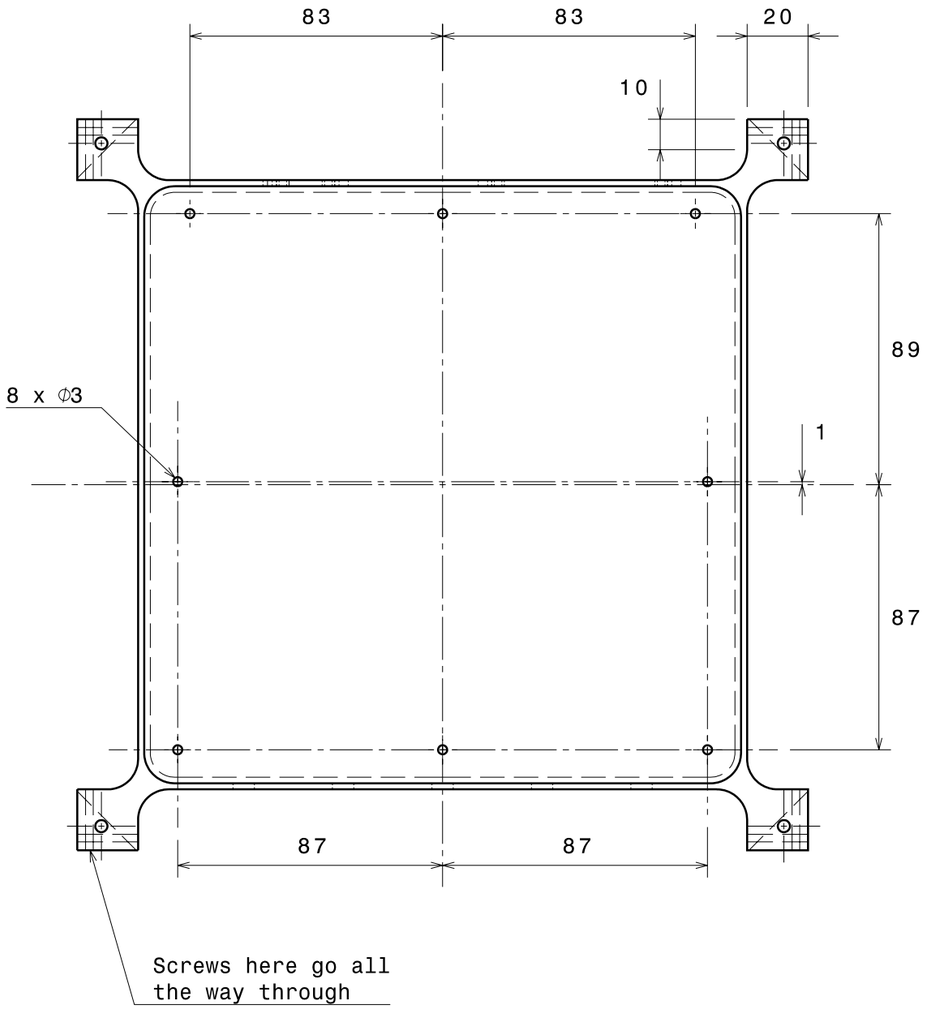

Bottom view (-z)

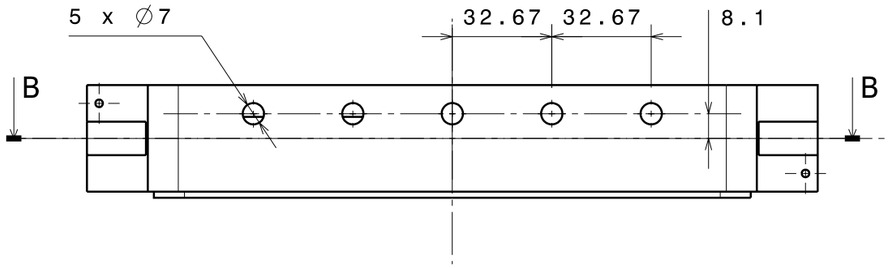

Rear view (-x)

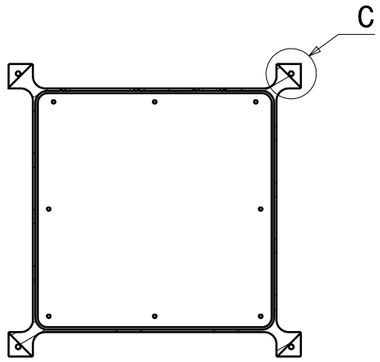

Section view B-B
Scale: 1:5

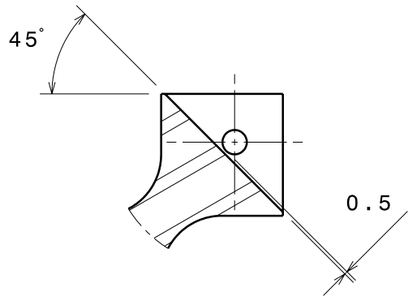

Detail C
Scale: 1:1

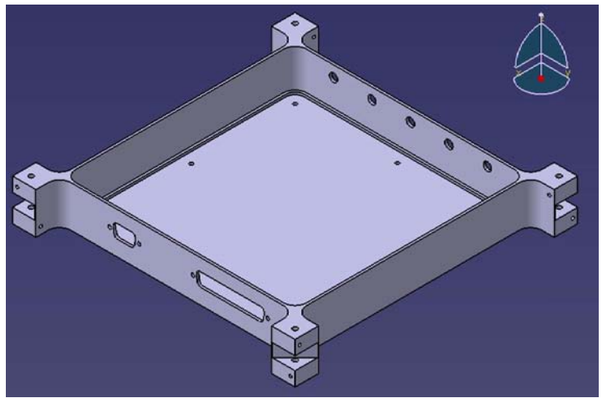

ALL DIMENSIONS ARE IN MM

TOLERANCES (UNLESS OTHERWISE SPECIFIED):
DIMENSIONS = ±.025
ANGLES = ±1°

CATIA DRAWING - TO BE MANUFACTURED USING CNC MILL, NOT MANUALLY
USE SYMMETRY TO CALCULATE DIMENSIONS

ULSSD BLUESAT UNSW STUDENT SATELLITE PROJECT

All dimensions are in mm

DRAWN: Christopher Hale	DATE: 28/4/2008
MATERIAL: Aluminium 6061-T6	WEIGHT: 0.61 kg

TITLE

TRAY 2: FLIGHT COMPUTER

SIZE	DWG. NO.	REV.
A3	MECH-0010-28April08	1.0

SCALE	RELEASED	SHEET
1:2	05/05/2008	2/2

This drawing is the property of BLUEsat. It may not be reproduced or communicated without our written agreement.

NO.	REVISION	DATE	APP.

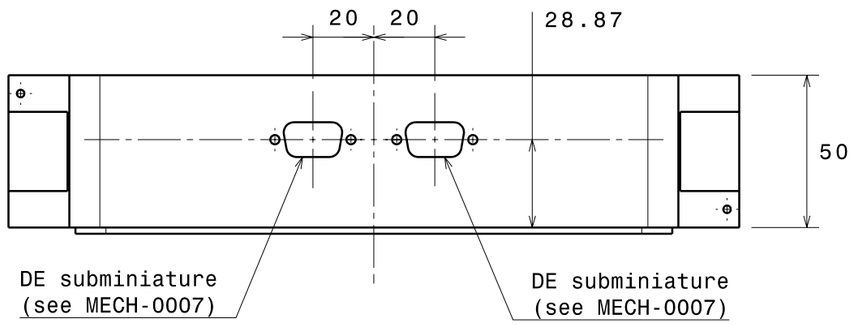

Front view (+x)

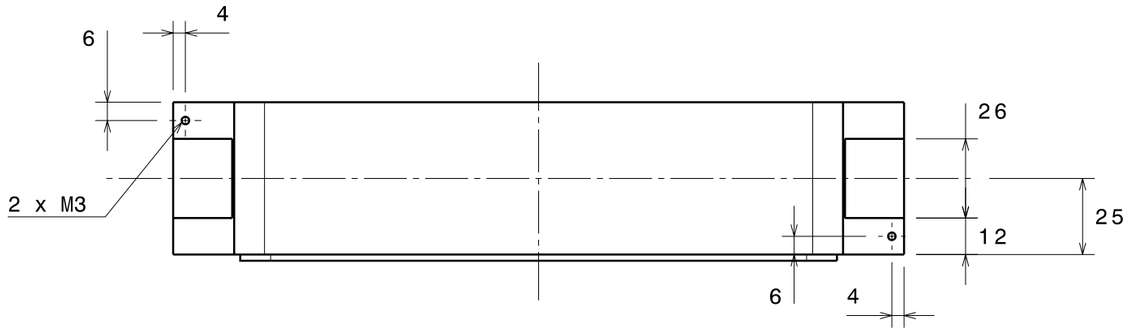

Right view (+y)
Left view (-y)
(BOTH IDENTICAL)

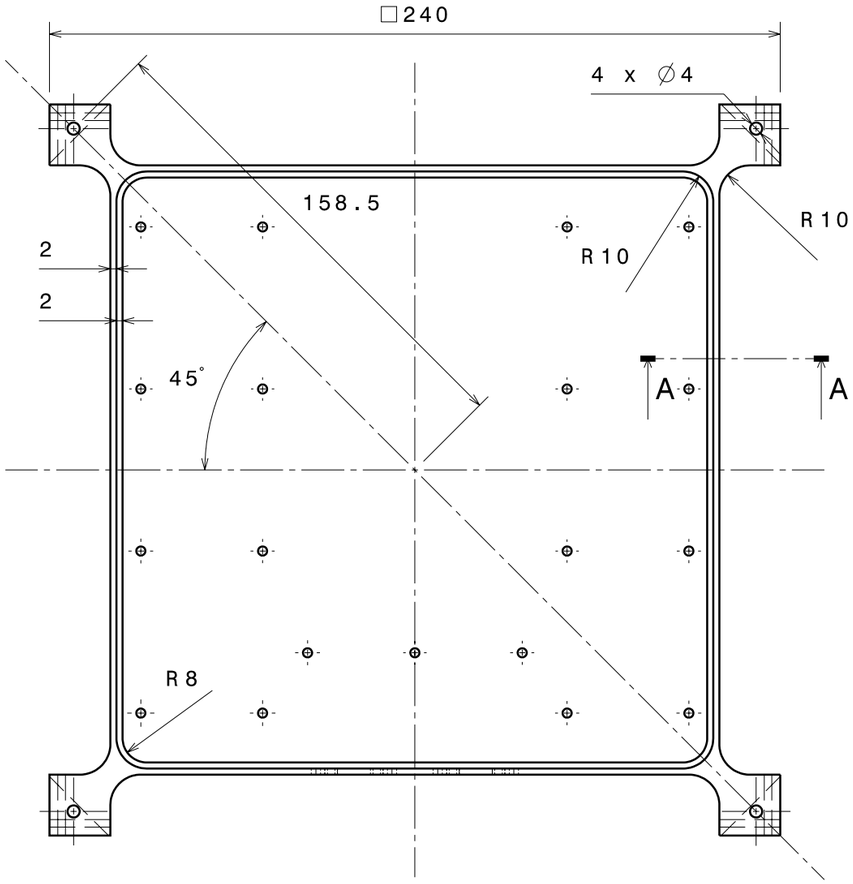

Top view (+z)

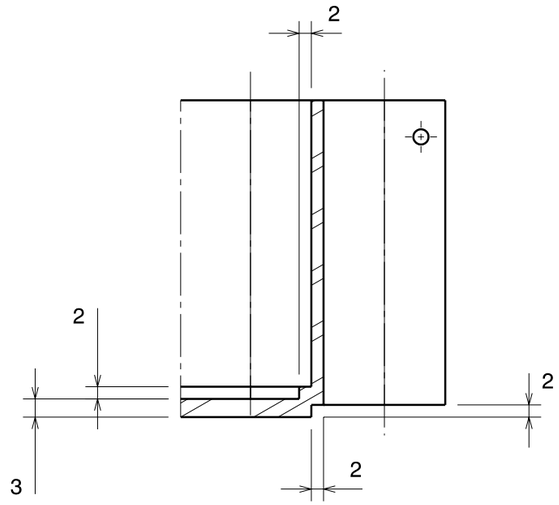

Section view A-A
Scale: 1:1

ALL DIMENSIONS ARE IN MM

TOLERANCES (UNLESS OTHERWISE SPECIFIED):
DIMENSIONS = ±.025
ANGLES = ±1°

CATIA DRAWING - TO BE MANUFACTURED USING CNC MILL, NOT MANUALLY
USE SYMMETRY TO CALCULATE DIMENSIONS

ULSSD BLUESAT UNSW STUDENT SATELLITE PROJECT

All dimensions are in mm

DRAWN	DATE	TITLE		
Christopher Hale	28/4/2008	TRAY 3: BATTERIES		
MATERIAL: Aluminium 6061-T6	WEIGHT: 0.72 kg	SIZE: A3	DWG. NO.: MECH-0011-28April08	REV.: 1.0
		SCALE: 1:2	RELEASED: 05/05/2008	SHEET: 1/2

This drawing is the property of BLUEsat. It may not be reproduced or communicated without our written agreement.

NO.	REVISION	DATE	APP.

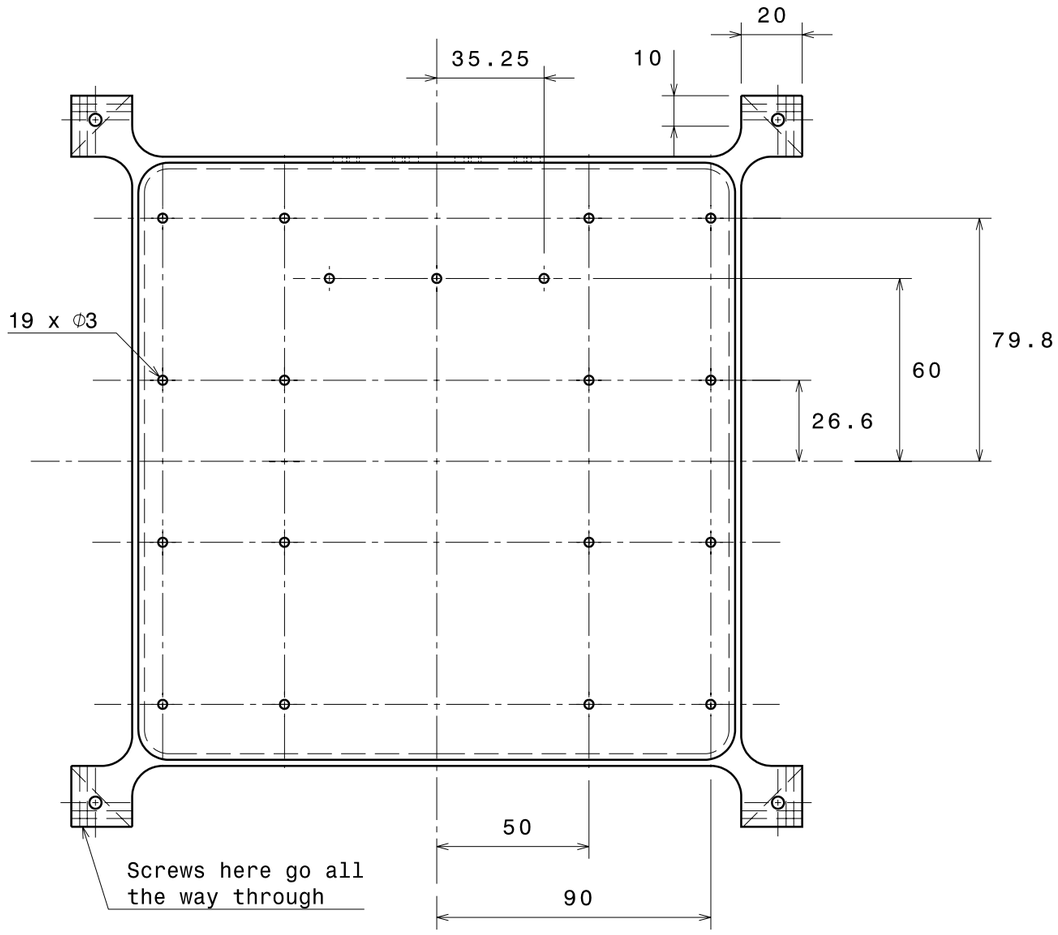

Bottom view (-z)

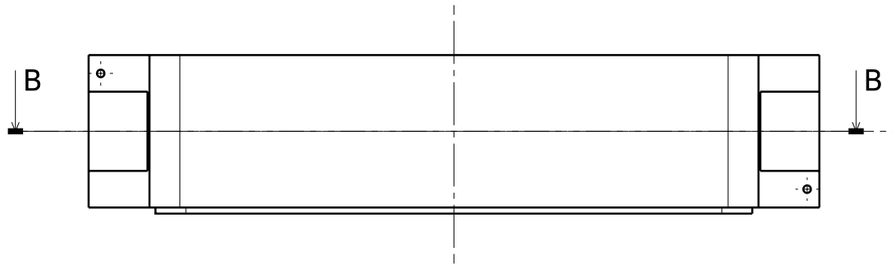

Rear view (-x)

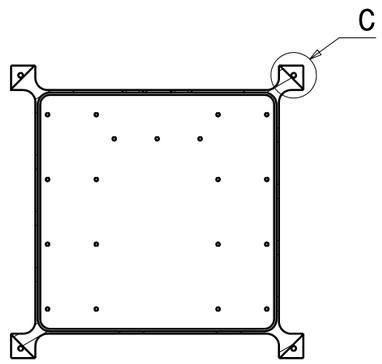

Section view B-B
Scale: 1:5

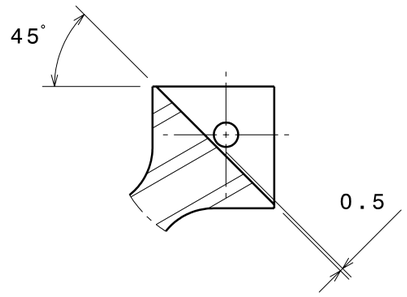

Detail C
Scale: 1:1

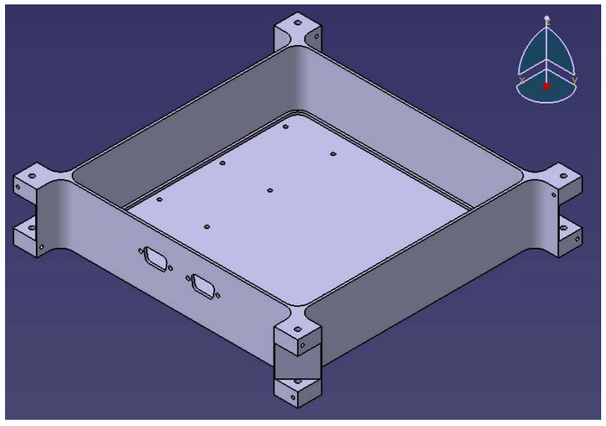

ALL DIMENSIONS ARE IN MM

TOLERANCES (UNLESS OTHERWISE SPECIFIED):
DIMENSIONS = ±.025
ANGLES = ±1°

CATIA DRAWING - TO BE MANUFACTURED USING CNC MILL, NOT MANUALLY
USE SYMMETRY TO CALCULATE DIMENSIONS

ULSSD BLUESAT UNSW STUDENT SATELLITE PROJECT

All dimensions are in mm

DRAWN	DATE
Christopher Hale	28/4/2008
MATERIAL: Aluminium 6061-T6	WEIGHT: 0.72 kg

TITLE

TRAY 3: BATTERIES

SIZE	DWG. NO.	REV.
A3	MECH-0011-28April08	1.0
SCALE 1:2	RELEASED 05/05/2008	SHEET 2/2

This drawing is the property of BLUEsat. It may not be reproduced or communicated without our written agreement.

NO.	REVISION	DATE	APP.

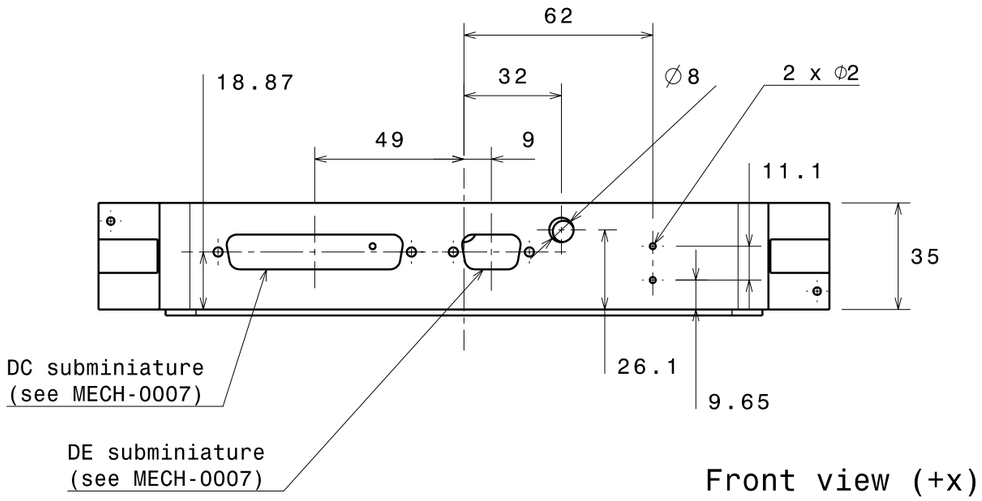

Front view (+x)

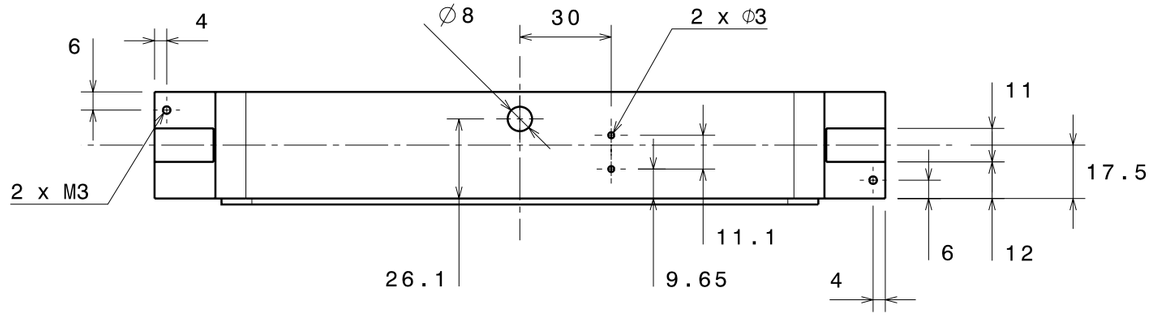

Right view (+y)
Left view (-y)
(BOTH IDENTICAL)

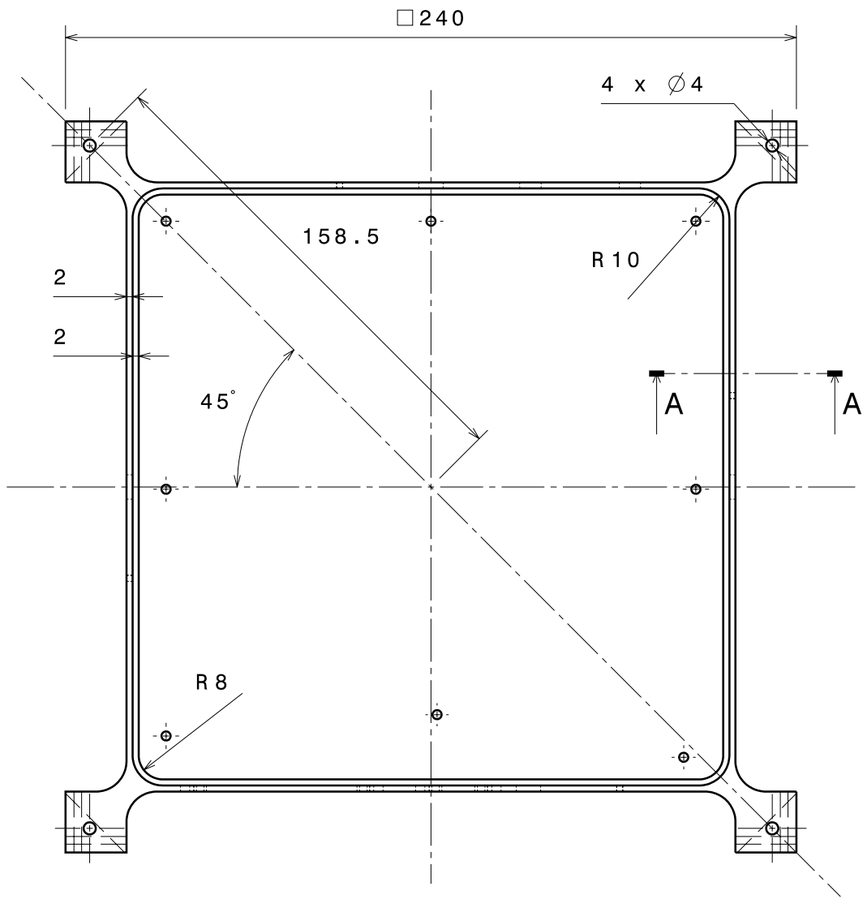

Top view (+z)

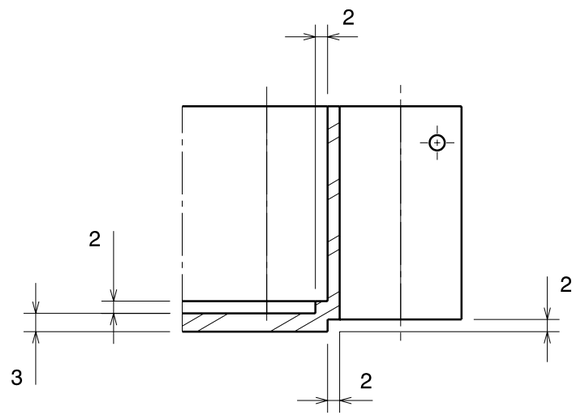

Section view A-A
Scale: 1:1

ALL DIMENSIONS ARE IN MM

TOLERANCES (UNLESS OTHERWISE SPECIFIED):
DIMENSIONS = ±.025
ANGLES = ±1°

CATIA DRAWING - TO BE MANUFACTURED USING CNC MILL, NOT MANUALLY
USE SYMMETRY TO CALCULATE DIMENSIONS

ULSSD BLUESAT UNSW STUDENT SATELLITE PROJECT

All dimensions are in mm

DRAWN: Christopher Hale	DATE: 28/4/2008
MATERIAL: Aluminium 6061-T6	WEIGHT: 0.61 kg

TITLE

TRAY 4: POWER CONTROL

SIZE	DWG. NO.	REV.
A3	MECH-0012-28April08	1.0

SCALE	RELEASED	SHEET
1:2	05/05/2008	1/2

This drawing is the property of BLUEsat. It may not be reproduced or communicated without our written agreement.

NO.	REVISION	DATE	APP.

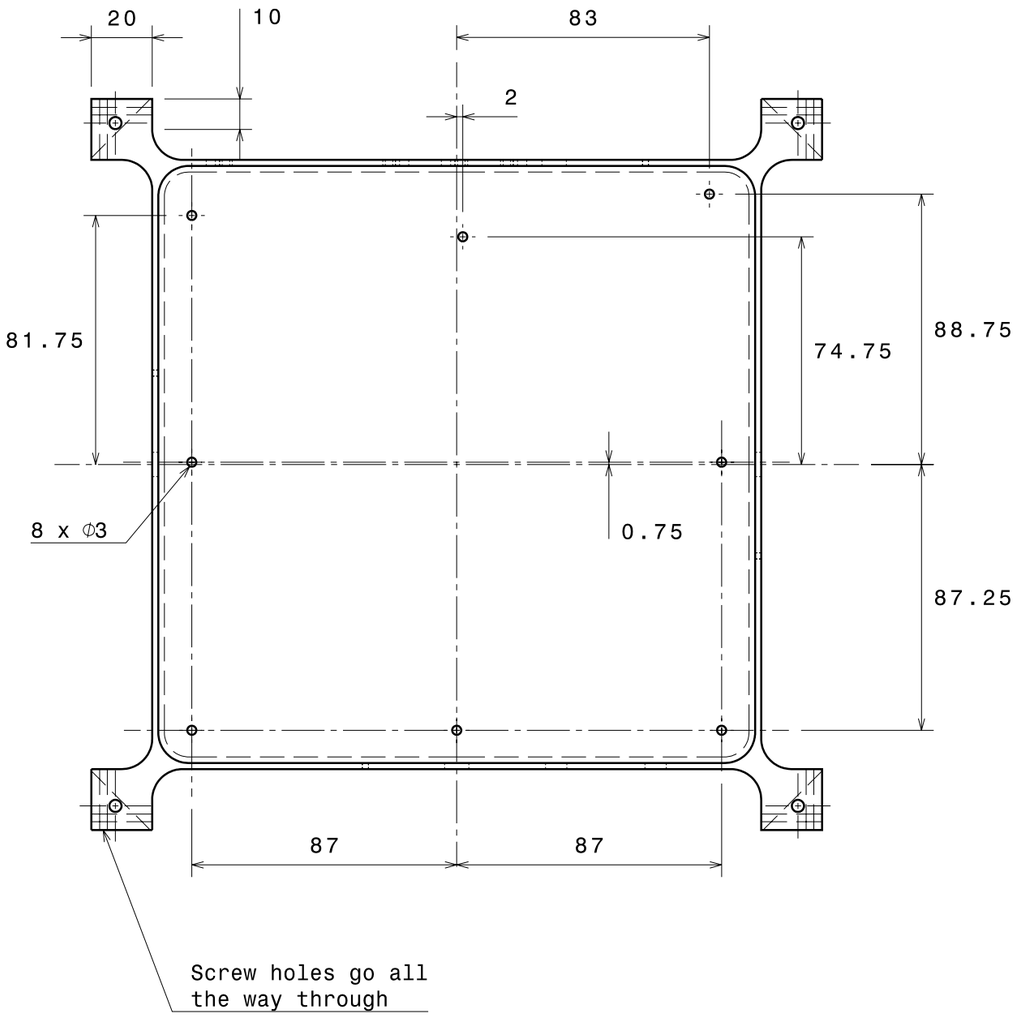

Bottom view (-z)

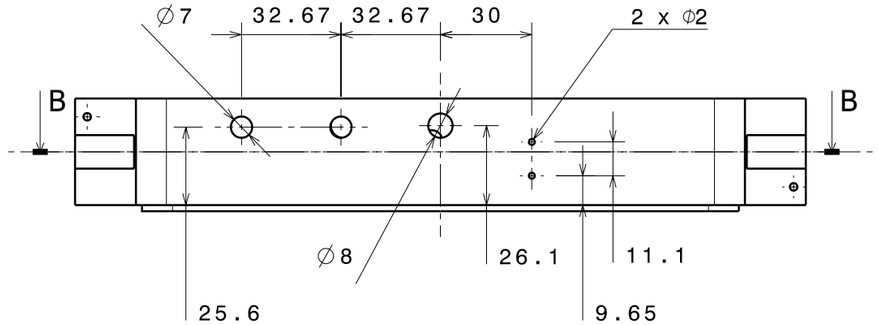

Rear view (-x)

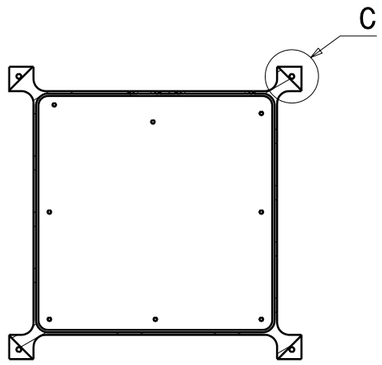

Section view B-B
Scale: 1:5

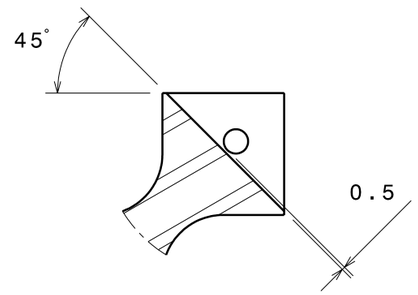

Detail C
Scale: 1:1

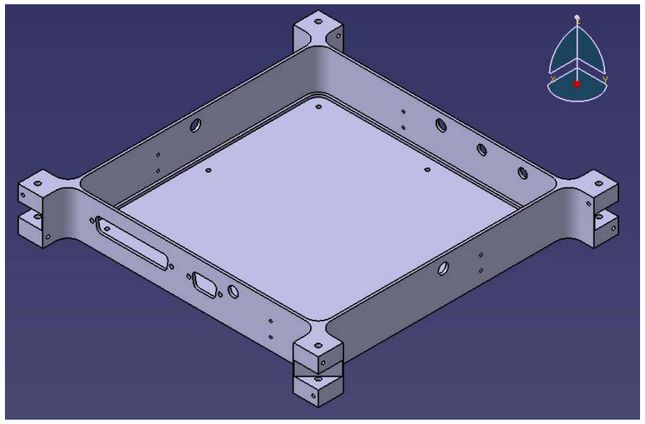

ALL DIMENSIONS ARE IN MM

TOLERANCES (UNLESS OTHERWISE SPECIFIED):
DIMENSIONS = ±.025
ANGLES = ±1°

CATIA DRAWING - TO BE MANUFACTURED USING CNC MILL, NOT MANUALLY
USE SYMMETRY TO CALCULATE DIMENSIONS

ULSSD BLUESAT UNSW STUDENT SATELLITE PROJECT

All dimensions are in mm

DRAWN	DATE
Christopher Hales	28/4/2008
MATERIAL: Aluminium 6061-T6	WEIGHT: 0.61 kg

TITLE

TRAY 4: POWER CONTROL

SIZE	DWG. NO.	REV.
A3	MECH-0012-28April08	1.0
SCALE 1:2	RELEASED 05/05/2008	SHEET 2/2

This drawing is the property of BLUEsat. It may not be reproduced or communicated without our written agreement.

NO.	REVISION	DATE	APP.

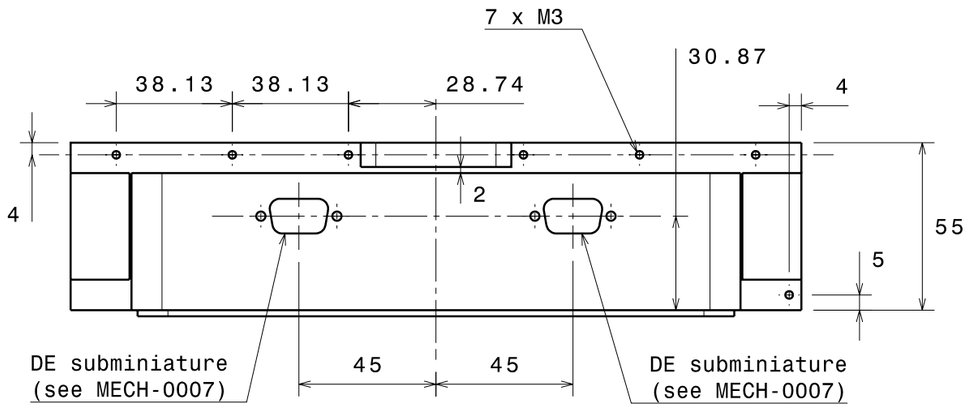

Front view (+z)

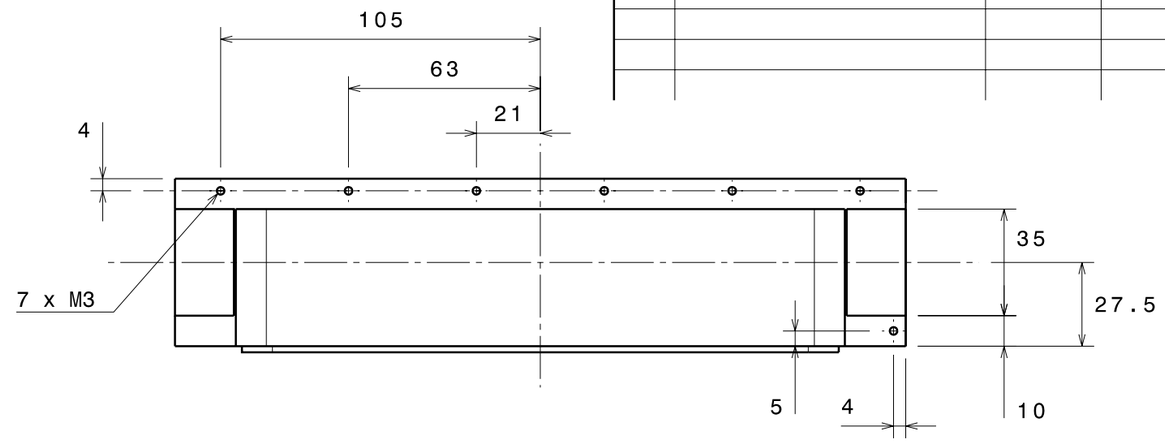

Right view (+y)
Left view (-y)
(BOTH IDENTICAL)

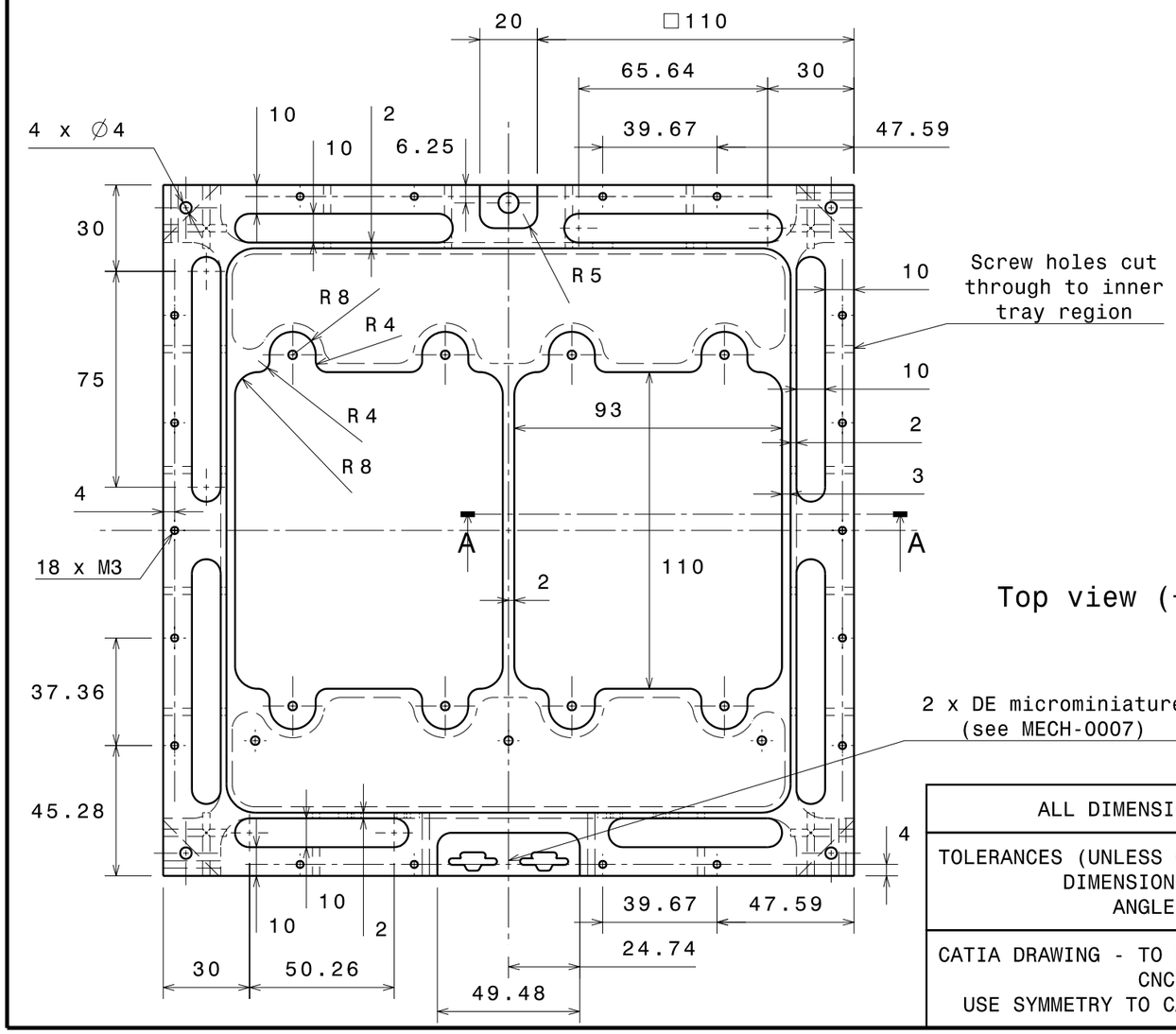

Top view (+z)

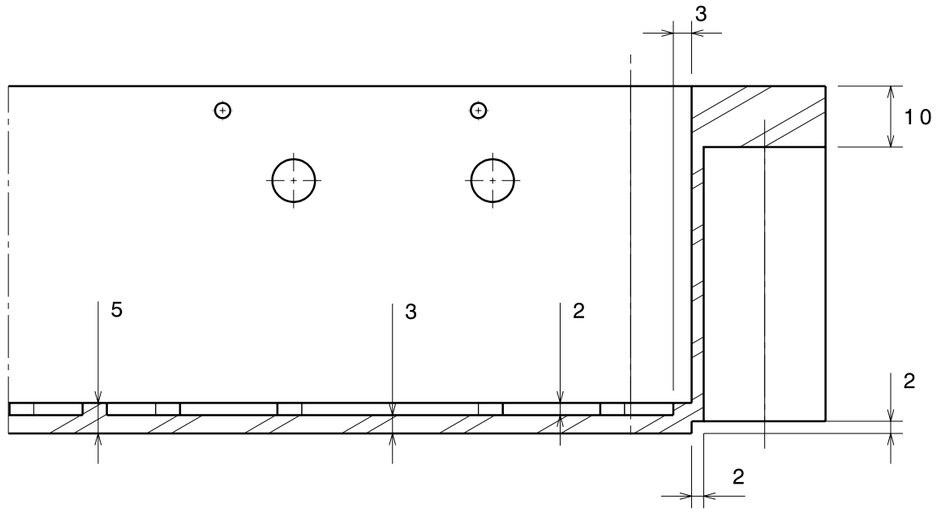

Section view A-A
Scale: 1:1

ALL DIMENSIONS ARE IN MM

TOLERANCES (UNLESS OTHERWISE SPECIFIED):
DIMENSIONS = ±.025
ANGLES = ±1°

CATIA DRAWING - TO BE MANUFACTURED USING CNC MILL, NOT MANUALLY
USE SYMMETRY TO CALCULATE DIMENSIONS

ULSSD BLUESAT UNSW STUDENT SATELLITE PROJECT

All dimensions are in mm

DRAWN	DATE
Christopher Hale	29/4/2008
MATERIAL	WEIGHT
Aluminium 6061-T6	1.01 kg

TITLE

TRAY 5: RECEIVERS

SIZE	DWG. NO.	REV.
A3	MECH-0013-7May08	1.0
SCALE 1:2	RELEASED 05/05/2008	SHEET 1/2

This drawing is the property of BLUEsat. It may not be reproduced or communicated without our written agreement.

NO.	REVISION	DATE	APP.

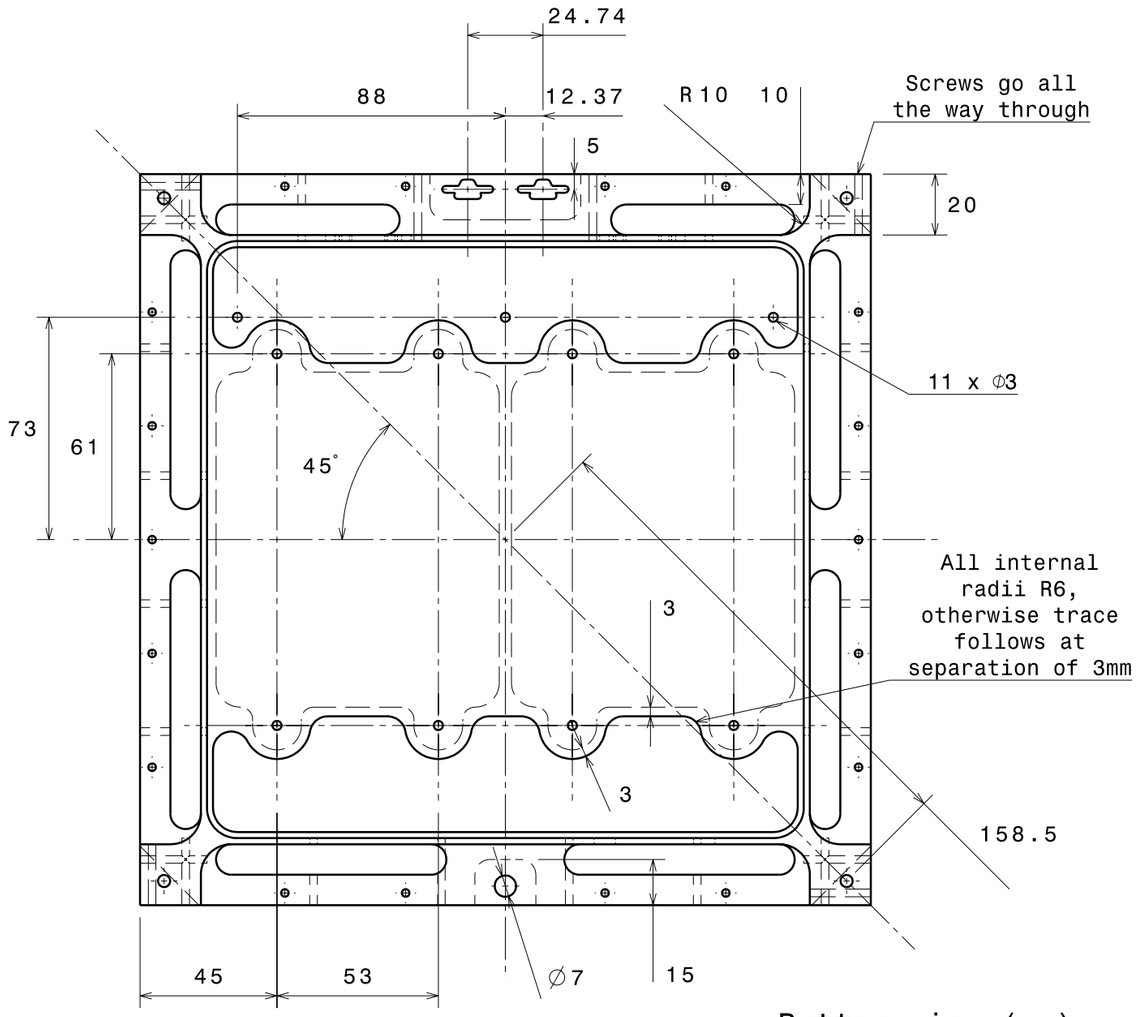

Bottom view (-z)

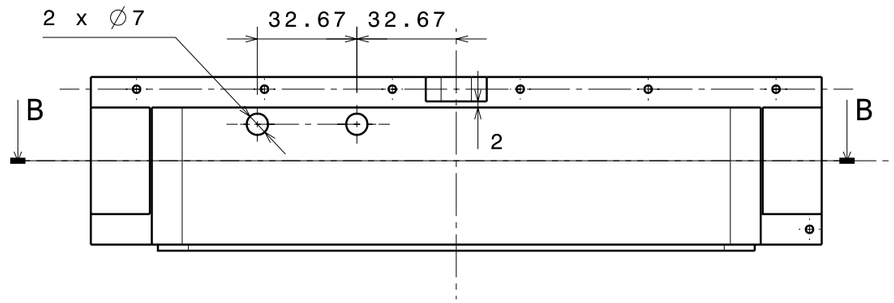

Rear view (-x)

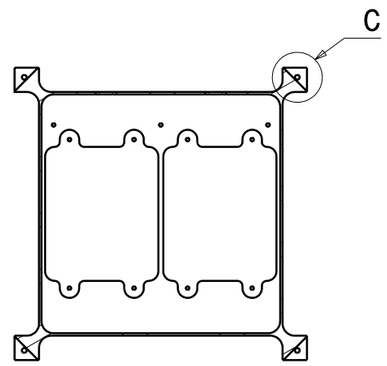

Section view B-B
Scale: 1:5

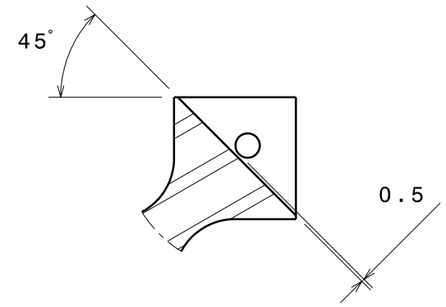

Detail C
Scale: 1:1

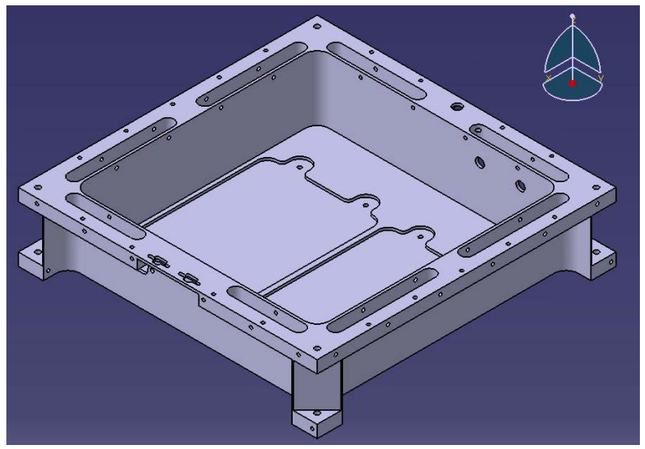

ALL DIMENSIONS ARE IN MM

TOLERANCES (UNLESS OTHERWISE SPECIFIED):
DIMENSIONS = ±.025
ANGLES = ±1°

CATIA DRAWING - TO BE MANUFACTURED USING CNC MILL, NOT MANUALLY
USE SYMMETRY TO CALCULATE DIMENSIONS

ULSSD BLUESAT UNSW STUDENT SATELLITE PROJECT

All dimensions are in mm

DRAWN: Christopher Hale	DATE: 29/4/2008
MATERIAL: Aluminium 6061-T6	WEIGHT: 1.01 kg

TITLE

TRAY 5: RECEIVERS

SIZE	DWG. NO.	REV.
A3	MECH-0013-7May08	1.0
SCALE 1:2	RELEASED 05/05/2008	SHEET 2/2

This drawing is the property of BLUEsat. It may not be reproduced or communicated without our written agreement.

NO.	REVISION	DATE	APP.

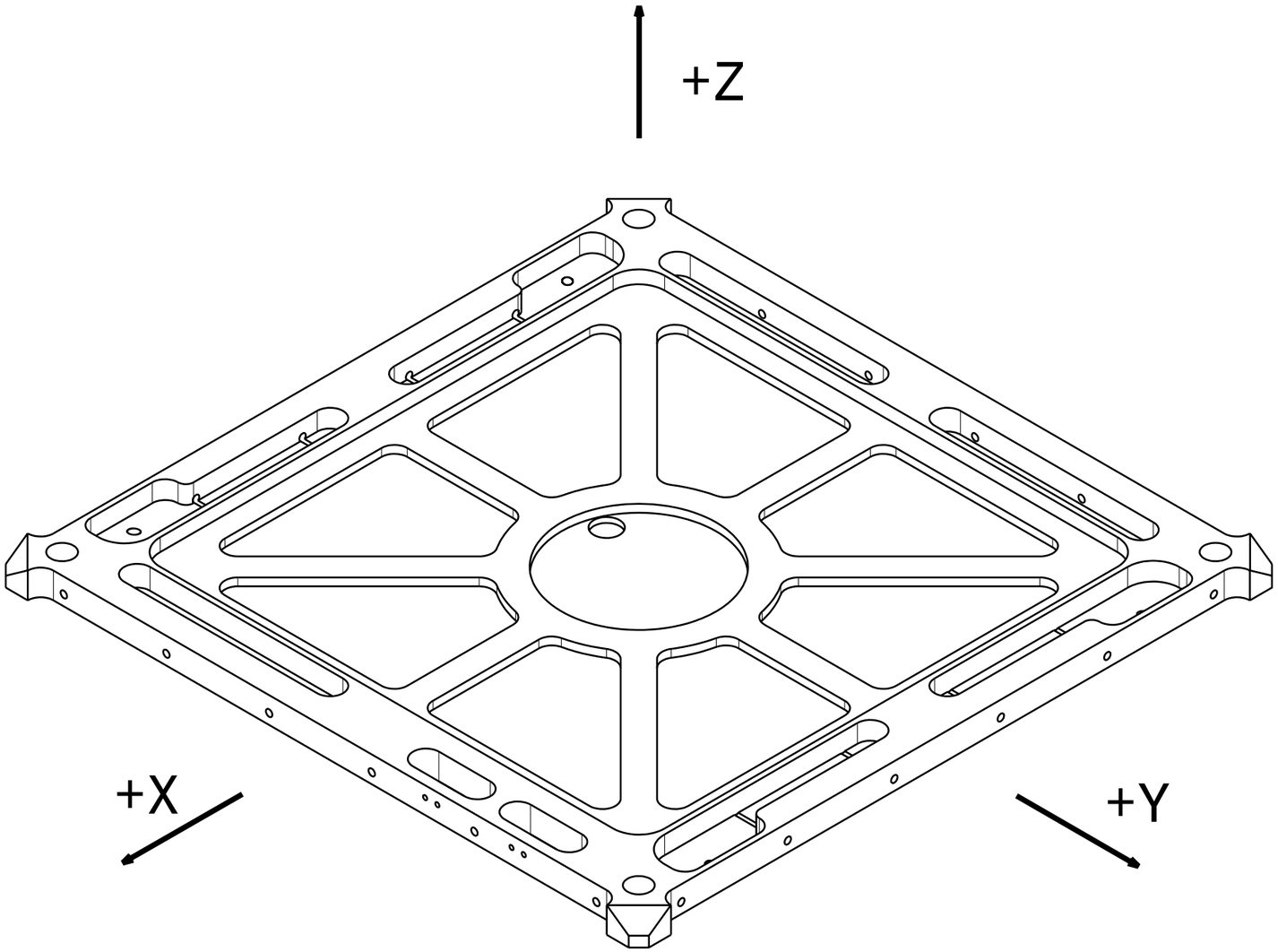

NOTES:
1) See MECH-0205 for tools to be used
2) The baseplate (Tray 0) on the left shows the +X face which contains 4 small screw holes that pass into two small slots, the +Z face which contains a number of ribs and slots, and the +Y axis forming a right-handed co-ordinate system.

ALL DIMENSIONS ARE IN MM

TOLERANCES (UNLESS OTHERWISE SPECIFIED):
DIMENSIONS = ±.025
ANGLES = ±1°

CATIA DRAWING - TO BE MANUFACTURED USING CNC MILL, NOT MANUALLY
USE SYMMETRY TO CALCULATE DIMENSIONS

ULSSD BLUESAT UNSW STUDENT SATELLITE PROJECT

All dimensions are in mm

DRAWN	DATE
Christopher Hale	23/5/2008
MATERIAL	WEIGHT
Aluminium 6061-T6	---

TITLE

MACHINING INFO FOR TRAY 0

SIZE	DWG. NO.	REV.
A3	MECH-0204-23May08	1.0
SCALE -:-	RELEASED 23/05/2008	SHEET 1/2

This drawing is the property of BLUEsat. It may not be reproduced or communicated without our written agreement.

NO.	REVISION	DATE	APP.

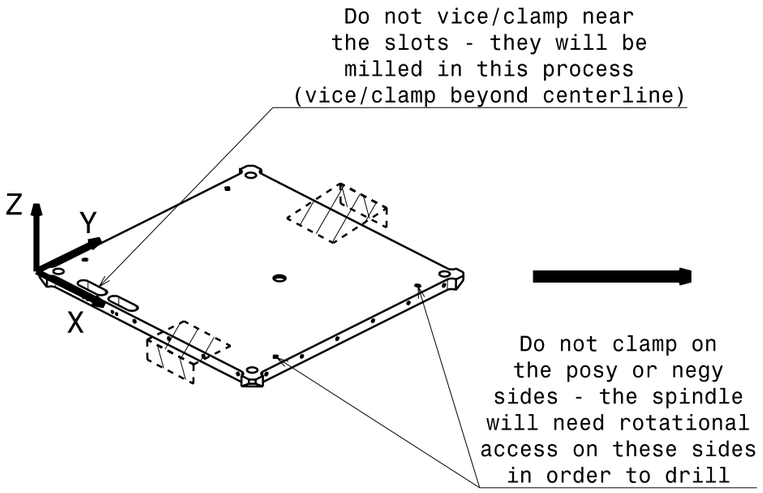

PROCESS 1 - NEGZ

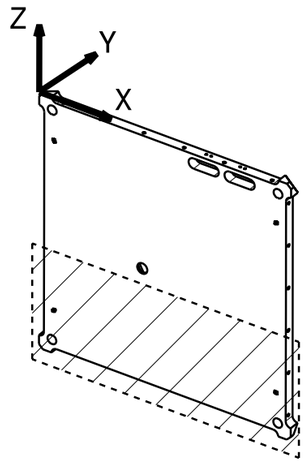

PROCESS 2 - POSX

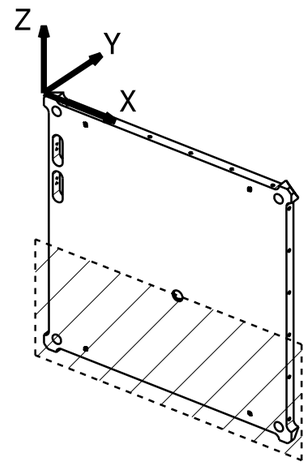

PROCESS 3 - POSY

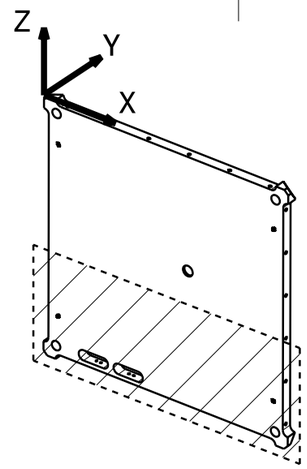

PROCESS 4 - NEGX

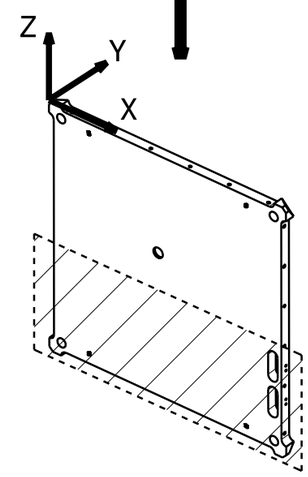

PROCESS 5 - NEGY

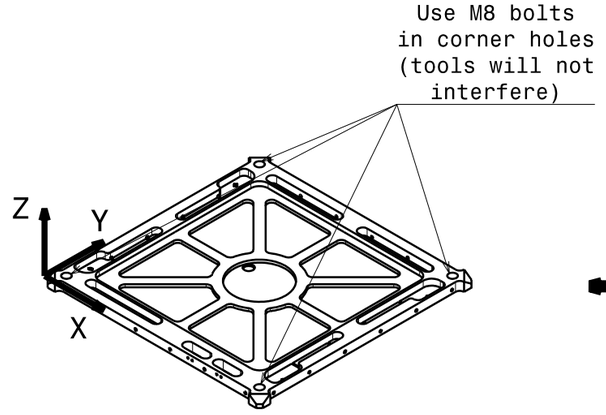

PROCESS 6 - POSZ

NOTES:
1) The name of each process refers to the face of Tray 0 being machined
2) The machining axes for each process, as shown, have been placed according to the original stock material. ALWAYS use the outermost dimensions for setting up the machining axes
3) The machining axes align the Z-axis with the tool axis, and the X-axis along the longest dimension for the process face. Note the location of the two small slots when positioning for each of the processes
4) All but process 6 use a vice grip to hold the stock material (process 1 could use clamps instead). The shaded areas indicate the placement for one side of this symmetric clamp. For process 6, M8 bolts should be used to hold down the corners of the tray. Note that NO machining of the corners will need to take place in process 6 (this will have been carried out in earlier processes)

ALL DIMENSIONS ARE IN MM

TOLERANCES (UNLESS OTHERWISE SPECIFIED):
DIMENSIONS = ±.025
ANGLES = ±1°

CATIA DRAWING - TO BE MANUFACTURED USING CNC MILL, NOT MANUALLY
USE SYMMETRY TO CALCULATE DIMENSIONS

ULSSD BLUESAT UNSW STUDENT SATELLITE PROJECT

All dimensions are in mm

DRAWN	DATE
Christopher Hale	23/5/2008
MATERIAL: Aluminium 6061-T6	WEIGHT: ---

TITLE: MACHINING INFO FOR TRAY 0

SIZE	DWG. NO.	REV.
A3	MECH-0204-23May08	1.0
SCALE -:-	RELEASED 23/05/2008	SHEET 2/2

This drawing is the property of BLUEsat. It may not be reproduced or communicated without our written agreement.

NO.	REVISION	DATE	APP.

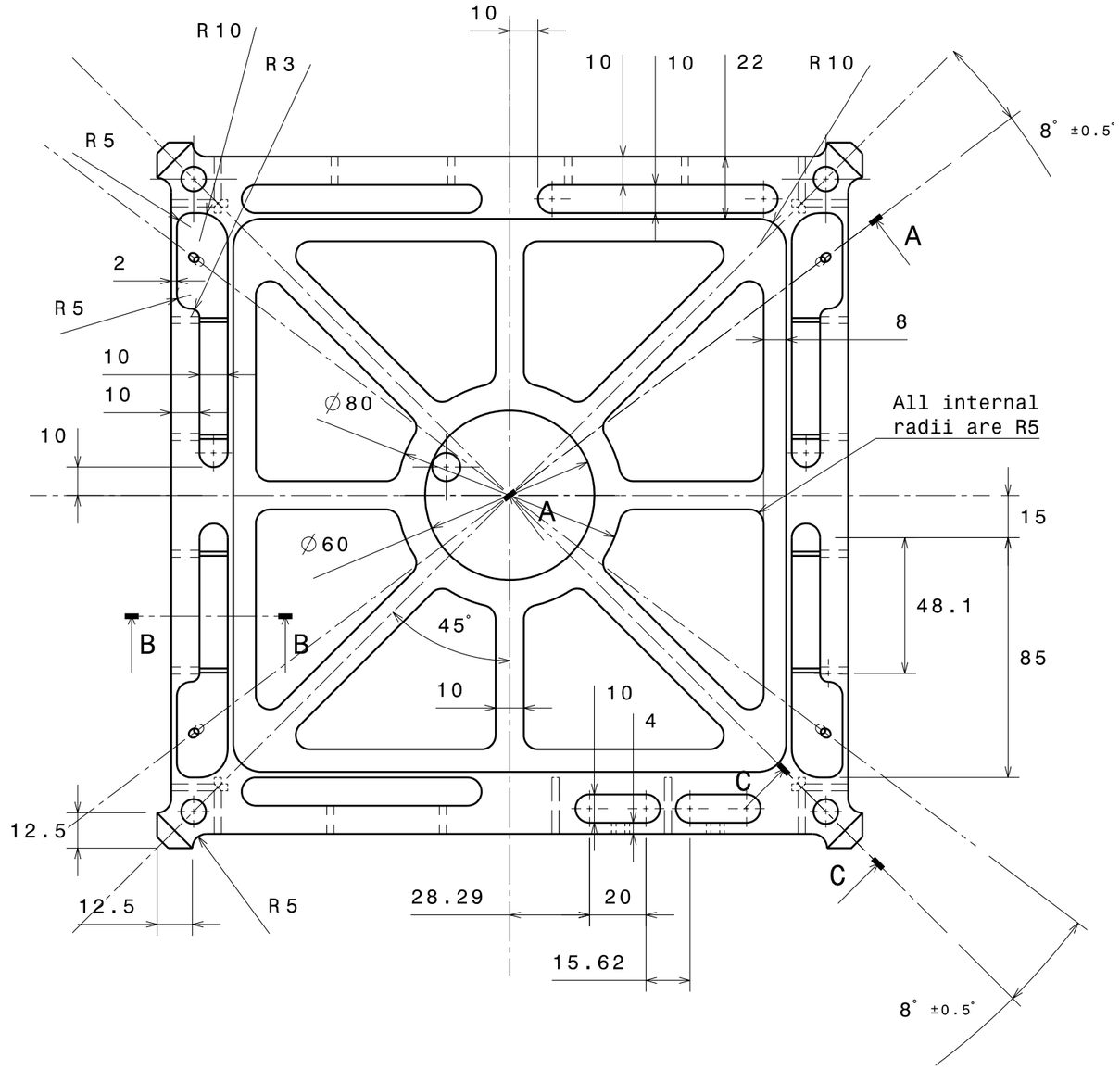

Top view (+z)

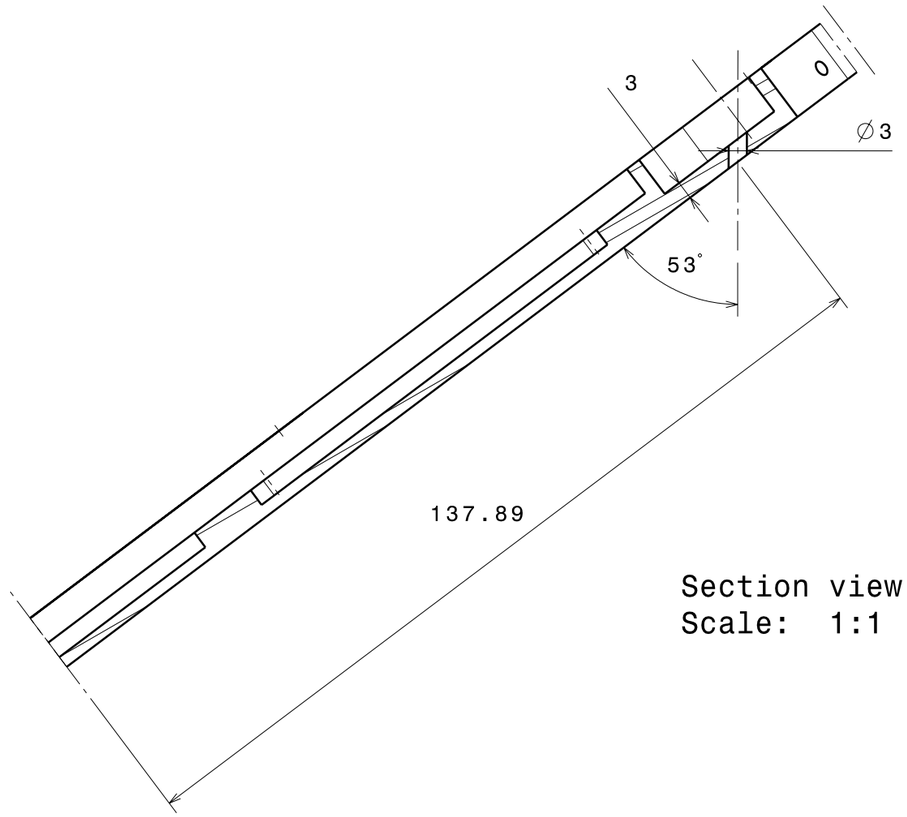

Section view A-A
Scale: 1:1

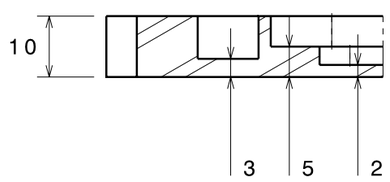

Section view B-B
Scale: 1:1

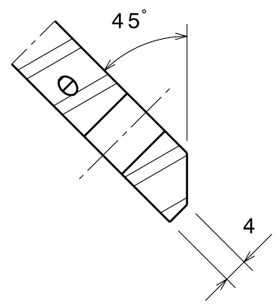

Section view C-C
Scale: 1:1

ALL DIMENSIONS ARE IN MM

TOLERANCES (UNLESS OTHERWISE SPECIFIED):
DIMENSIONS = ±.025
ANGLES = ±1°

CATIA DRAWING - TO BE MANUFACTURED USING CNC MILL, NOT MANUALLY
USE SYMMETRY TO CALCULATE DIMENSIONS

ULSSD BLUESAT UNSW STUDENT SATELLITE PROJECT

All dimensions are in mm

DRAWN	DATE
Christopher Hale	23/04/2008
MATERIAL: Aluminium 6061-T6	WEIGHT: 0.69 kg

TITLE

TRAY 0: BASEPLATE

SIZE	DWG. NO.	REV.
A3	MECH-0008-23April08	1.0
SCALE 1:2	RELEASED 05/05/2008	SHEET 1/2

This drawing is the property of BLUEsat. It may not be reproduced or communicated without our written agreement.

NO.	REVISION	DATE	APP.

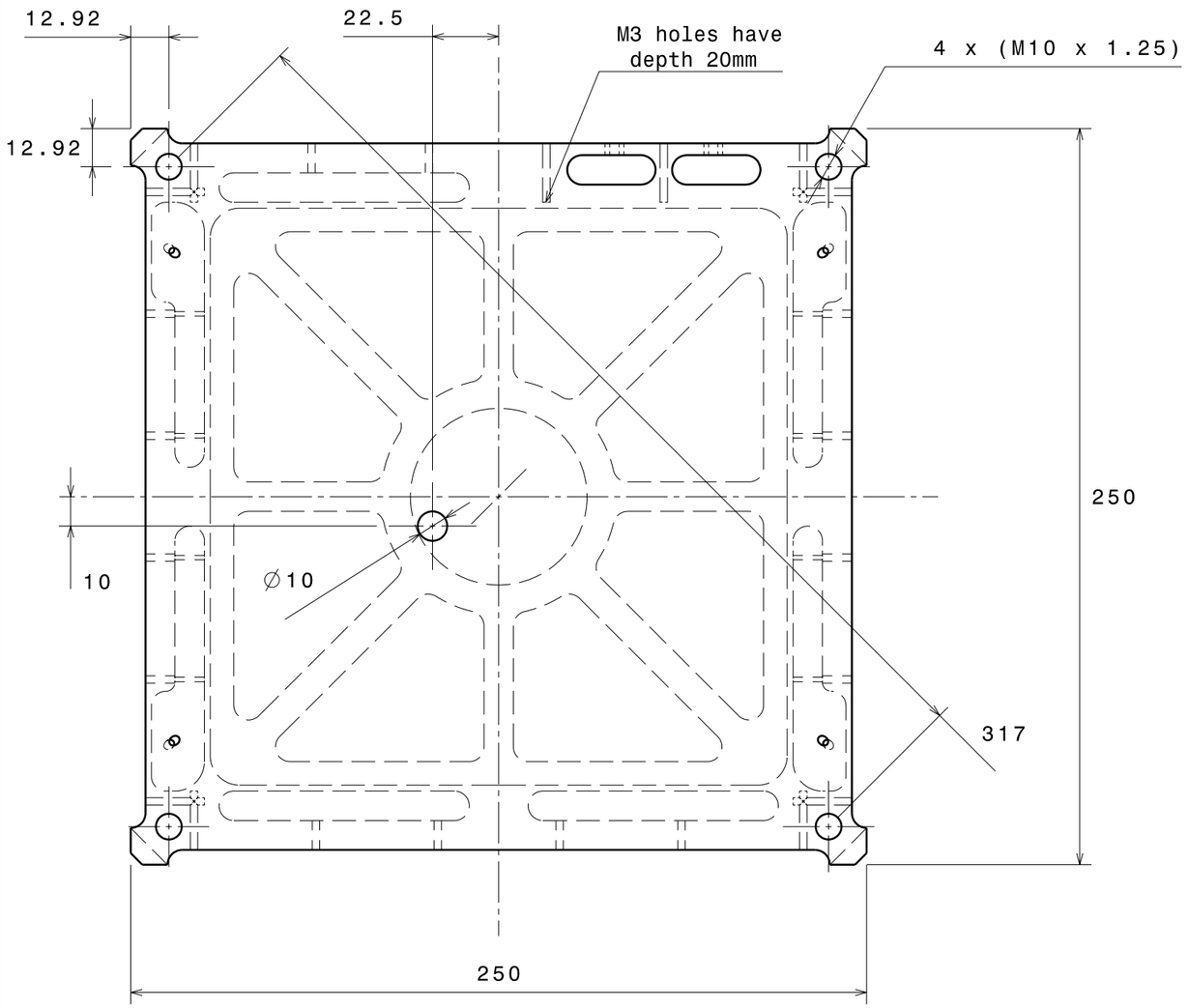

Bottom view (-z)

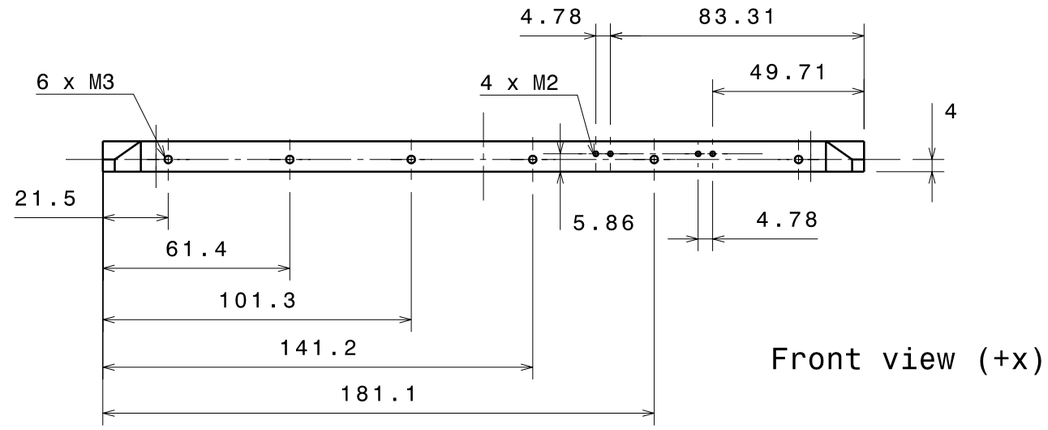

Front view (+x)

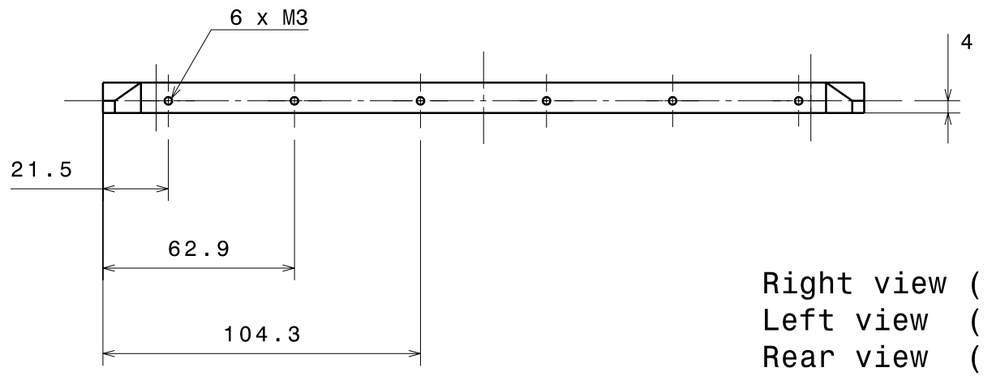

Right view (+y)
Left view (-y)
Rear view (-x)
(ALL IDENTICAL)

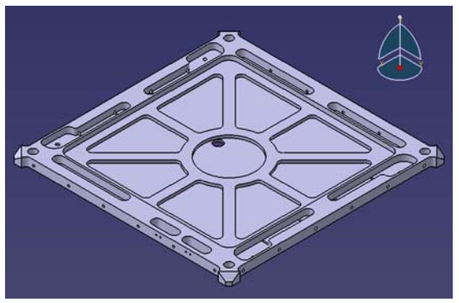

ALL DIMENSIONS ARE IN MM

TOLERANCES (UNLESS OTHERWISE SPECIFIED):
DIMENSIONS = ±.025
ANGLES = ±1°

CATIA DRAWING - TO BE MANUFACTURED USING CNC MILL, NOT MANUALLY
USE SYMMETRY TO CALCULATE DIMENSIONS

ULSSD BLUESAT UNSW STUDENT SATELLITE PROJECT

All dimensions are in mm

DRAWN: Christopher Hale	DATE: 23/04/2008	TITLE: TRAY 0: BASEPLATE	
MATERIAL: Aluminium 6061-T6	WEIGHT: 0.69 kg	SIZE: A3	DWG. NO.: MECH-0008-23April08 / REV.: 1.0
		SCALE: 1:2	RELEASED: 05/05/2008 / SHEET: 2/2

This drawing is the property of BLUEsat. It may not be reproduced or communicated without our written agreement.

NO.	REVISION	DATE	APP.

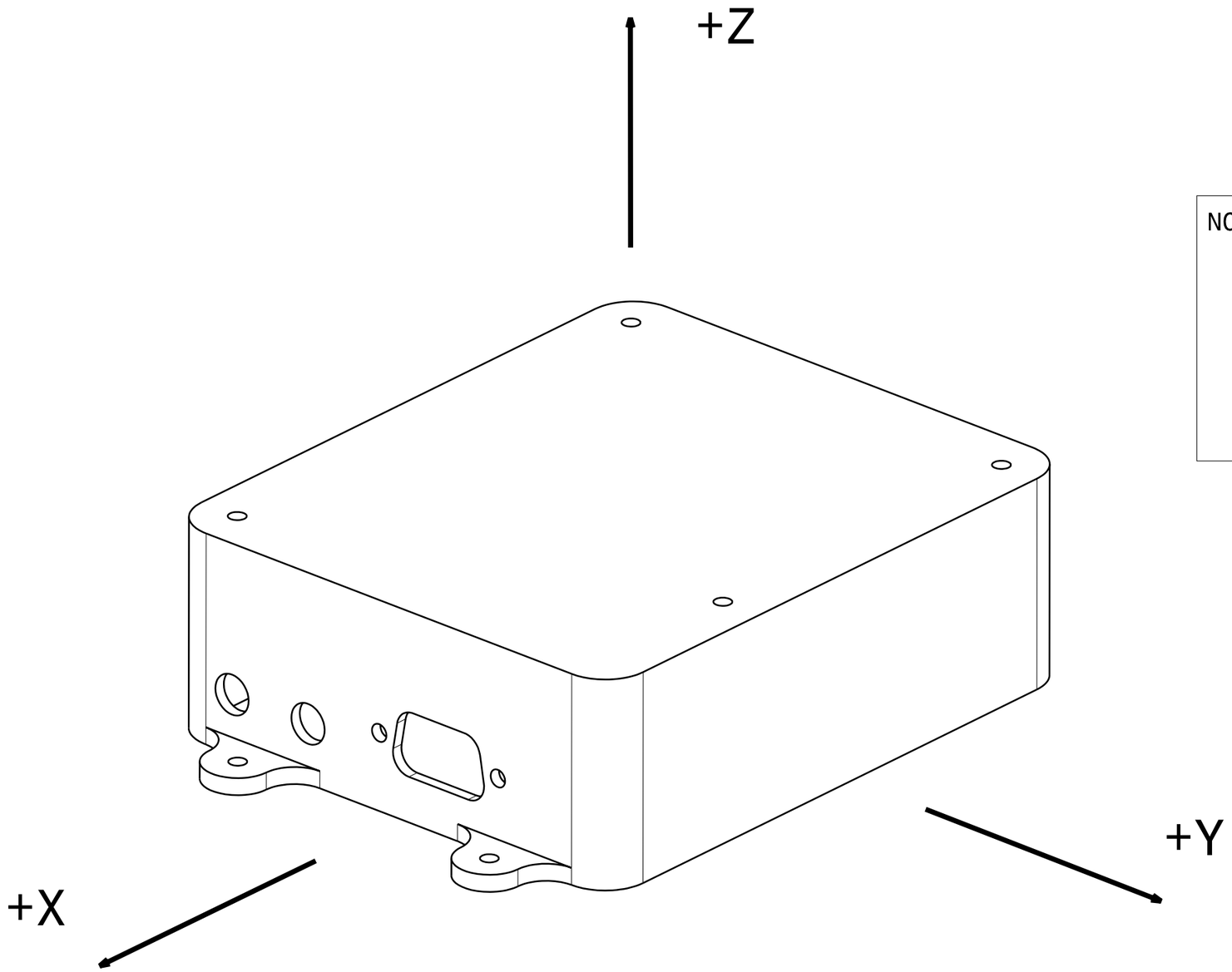

NOTES:
1) See MECH-0205 for tools to be used
2) The housing on the left is representative of the general layout of the RX and TX housings, with D-connectors on the +X face, the upright housing pointing in the +Z direction, and the +Y axis forming a right-handed co-ordinate system.

ALL DIMENSIONS ARE IN MM

TOLERANCES (UNLESS OTHERWISE SPECIFIED):
DIMENSIONS = ±.025
ANGLES = ±1°

CATIA DRAWING - TO BE MANUFACTURED USING CNC MILL, NOT MANUALLY
USE SYMMETRY TO CALCULATE DIMENSIONS

ULSSD BLUESAT UNSW STUDENT SATELLITE PROJECT

All dimensions are in mm

DRAWN	DATE
Christopher Hale	23/5/2008
MATERIAL	WEIGHT
Aluminium 6061-T6	---

TITLE

MACHINING INFO FOR RX AND TX HOUSINGS

SIZE	DWG. NO.	REV.
A3	MECH-0206-23May08	1.0
SCALE -:-	RELEASED 23/05/2008	SHEET 1/2

This drawing is the property of BLUEsat. It may not be reproduced or communicated without our written agreement.

NO.	REVISION	DATE	APP.

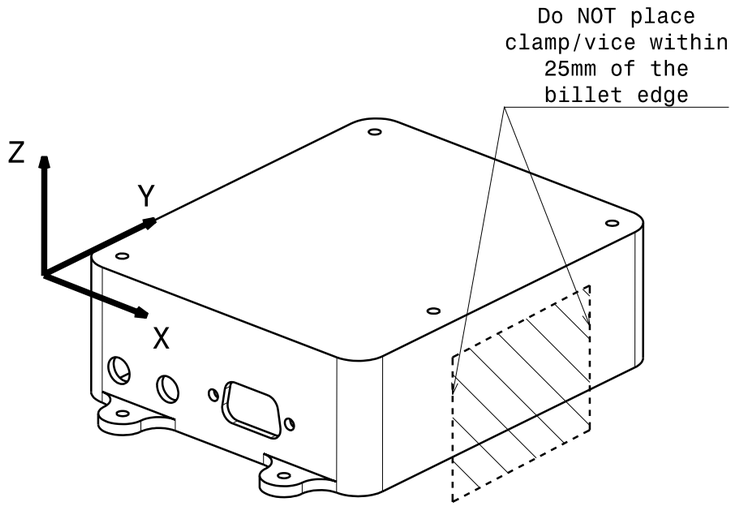

PROCESS 1 - POSZ
(WARNING: CODE IS DIFFERENT FOR ALL 4 HOUSINGS!)

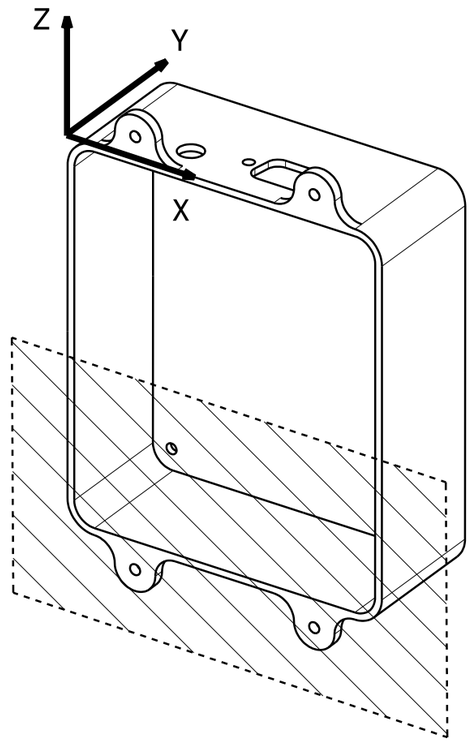

PROCESS 2 - POSX

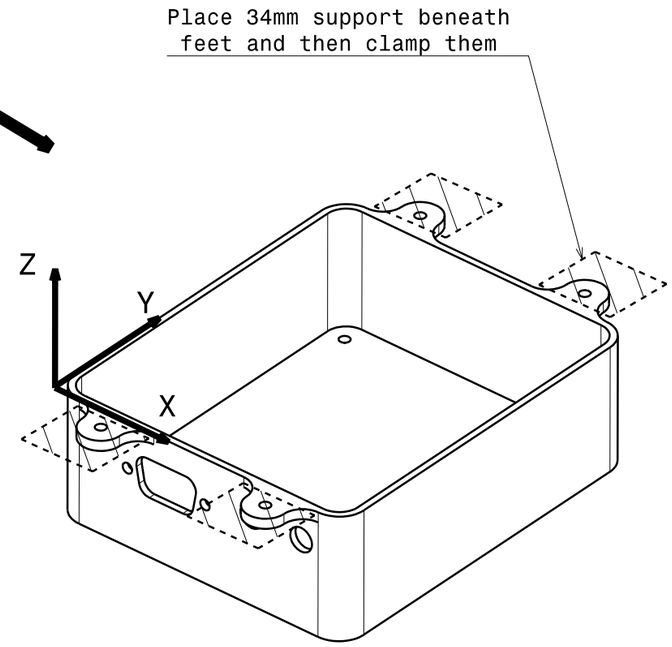

PROCESS 3 - NEGZ

NOTES:
1) The name of each process refers to the face of the housing being machined
2) The machining axes for process 1 have been placed at the outer corner of the stock material. However, for processes 2 and 3, the machining axes have been placed on the +X surface with the D-connector holes (ie they are NOT measured from the outer radii of the housing feet)
3) The machining axes align the Z-axis with the tool axis, and the X-axis along the longest dimension for the process face. Note the location of the D-connectors when positioning for each of the processes
4) Processes 1 and 2 use a vice grip vice grip to hold the material. Process 3 uses clamps over the feet, but these feet MUST be supported by additional material so as to not shear them off during machining

ALL DIMENSIONS ARE IN MM

TOLERANCES (UNLESS OTHERWISE SPECIFIED):
DIMENSIONS = ±.025
ANGLES = ±1°

CATIA DRAWING - TO BE MANUFACTURED USING CNC MILL, NOT MANUALLY
USE SYMMETRY TO CALCULATE DIMENSIONS

ULSSD BLUESAT UNSW STUDENT SATELLITE PROJECT

All dimensions are in mm

DRAWN	DATE
Christopher Hale	23/5/2008
MATERIAL	WEIGHT
Aluminium 6061-T6	---

TITLE

MACHINING INFO FOR RX AND TX HOUSINGS

SIZE	DWG. NO.	REV.
A3	MECH-0206-23May08	1.0
SCALE -:-	RELEASED 23/05/2008	SHEET 2/2

This drawing is the property of BLUEsat. It may not be reproduced or communicated without our written agreement.

NO.	REVISION	DATE	APP.

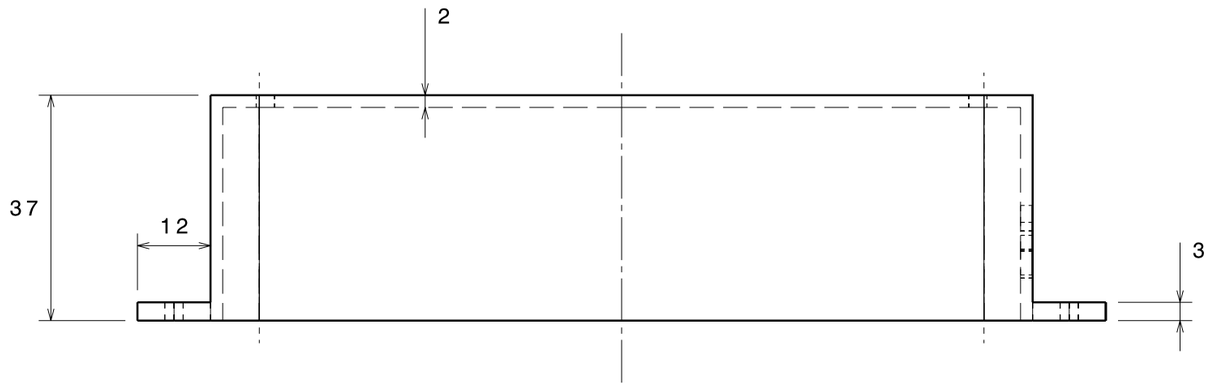

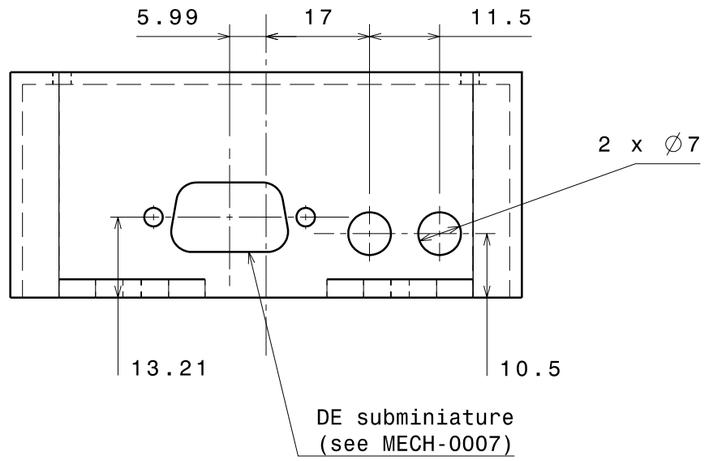

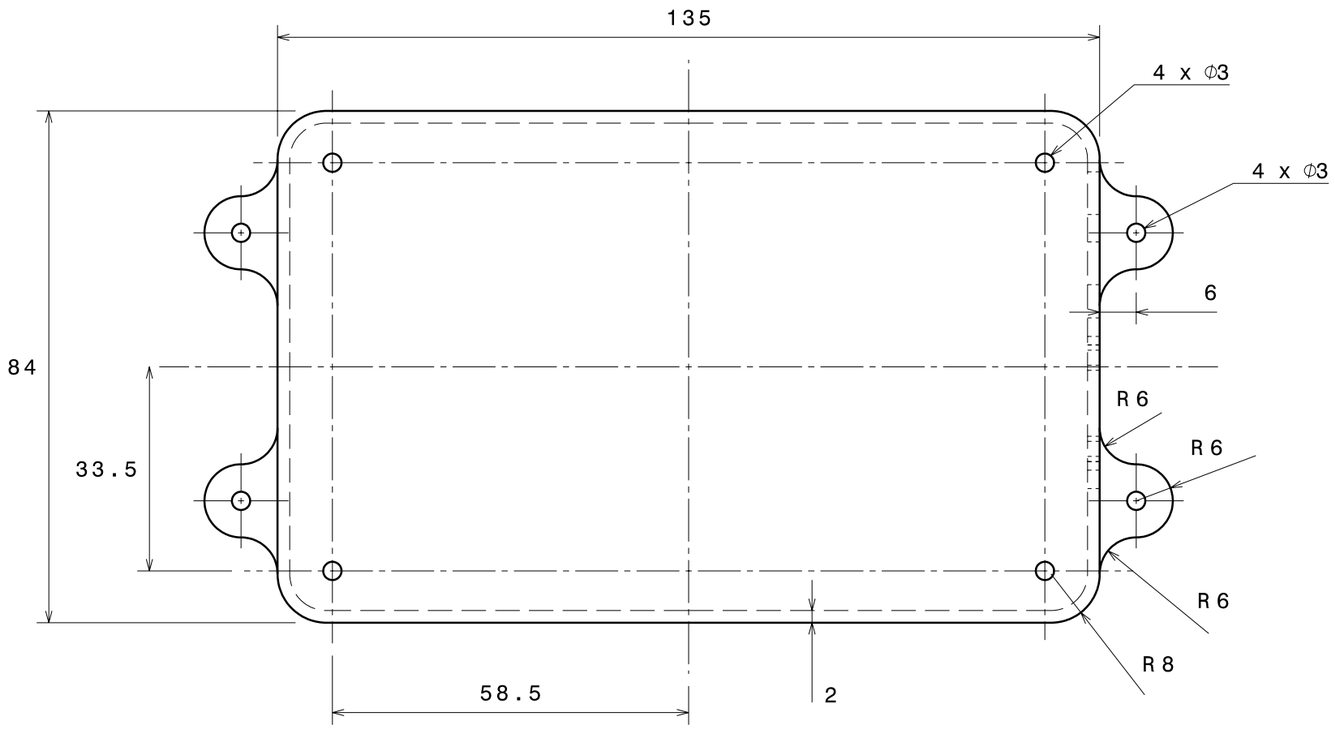

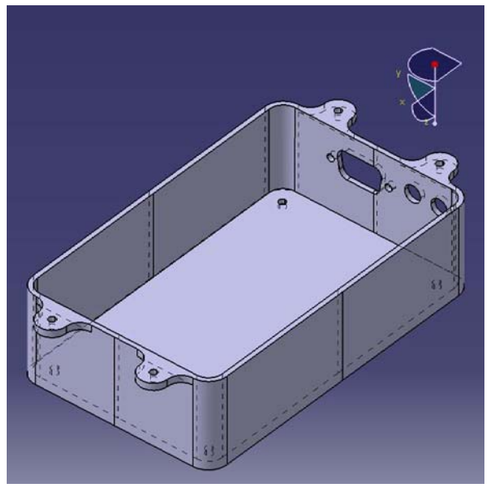

ALL DIMENSIONS ARE IN MM

TOLERANCES (UNLESS OTHERWISE SPECIFIED):
DIMENSIONS = ±.025
ANGLES = ±1°

CATIA DRAWING - TO BE MANUFACTURED USING CNC MILL, NOT MANUALLY
USE SYMMETRY TO CALCULATE DIMENSIONS

ULSSD BLUESAT UNSW STUDENT SATELLITE PROJECT

All dimensions are in mm

DRAWN	DATE	TITLE		
Christopher Hale	29/4/2008	TRANSMITTER HOUSING		
MATERIAL: Aluminium 6061-T6	WEIGHT: 0.14 kg	SIZE: A3	DWG. NO.: MECH-0014-29April08	REV.: 1.0
		SCALE: 1:1	RELEASED: 05/05/2008	SHEET: 1/1

This drawing is the property of BLUEsat. It may not be reproduced or communicated without our written agreement.

NO.	REVISION	DATE	APP.

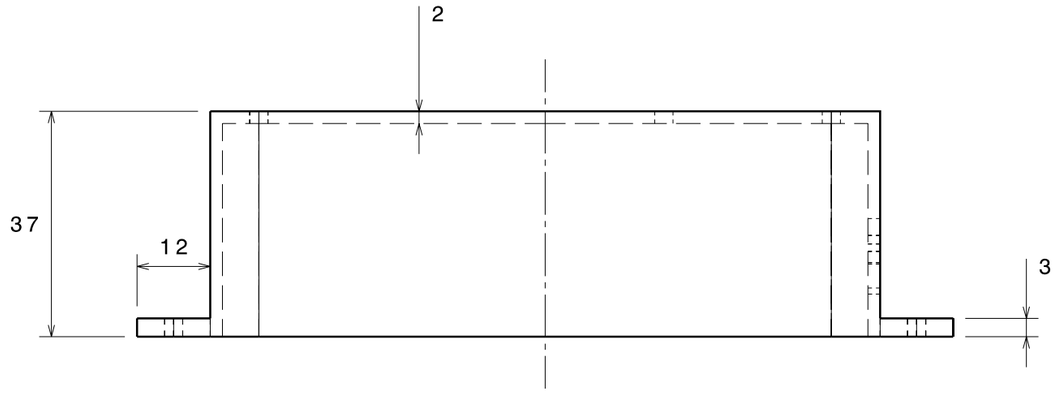

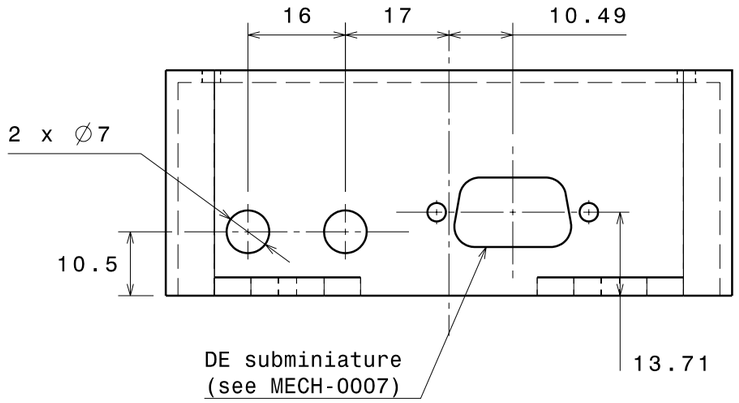

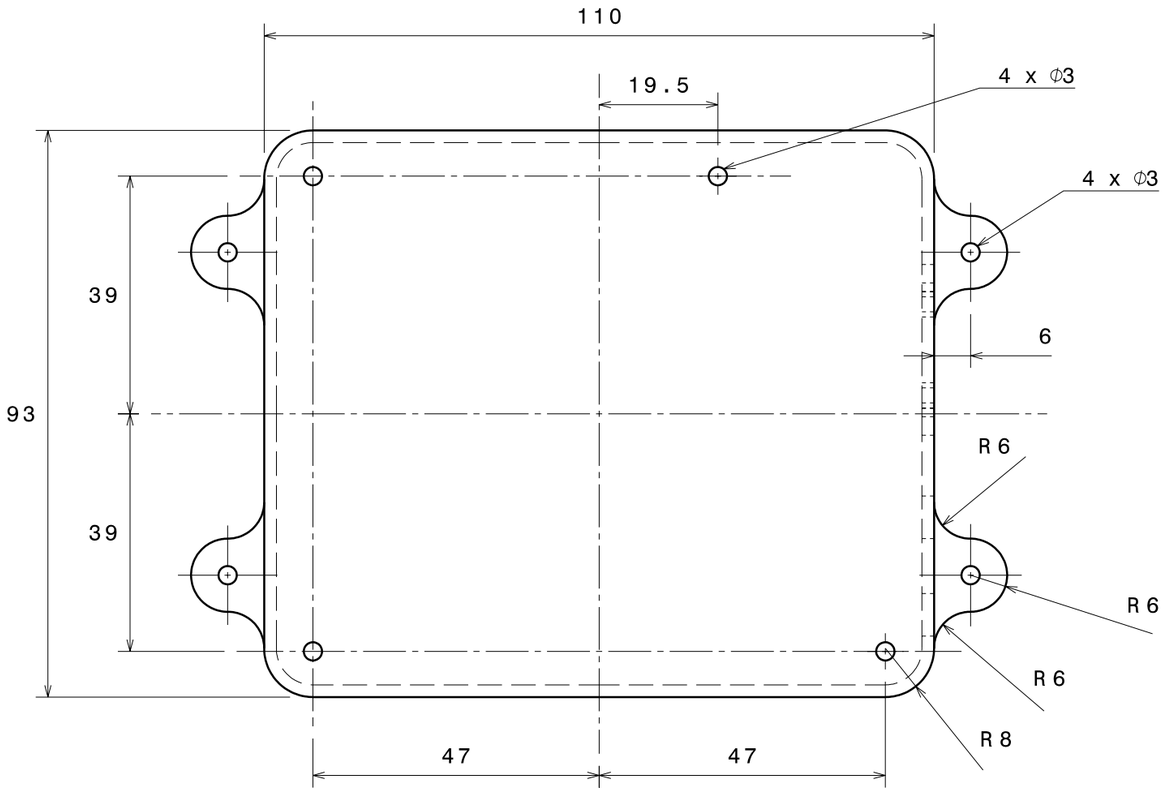

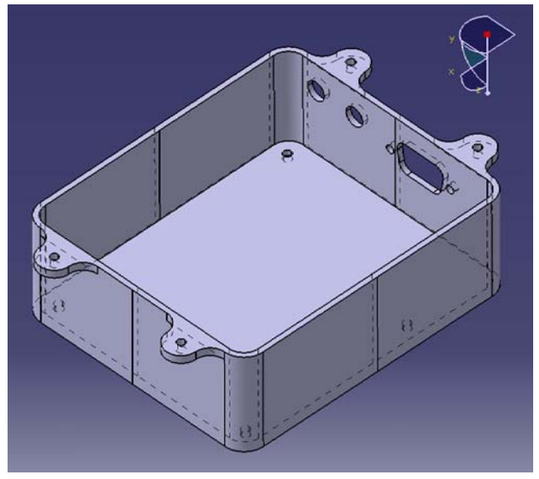

ALL DIMENSIONS ARE IN MM

TOLERANCES (UNLESS OTHERWISE SPECIFIED):
DIMENSIONS = ±.025
ANGLES = ±1°

CATIA DRAWING - TO BE MANUFACTURED USING CNC MILL, NOT MANUALLY
USE SYMMETRY TO CALCULATE DIMENSIONS

ULSSD BLUESAT UNSW STUDENT SATELLITE PROJECT

All dimensions are in mm

DRAWN	DATE	TITLE		
Christopher Hale	29/4/2008	RECEIVER HOUSINGS		
MATERIAL: Aluminium 6061-T6	WEIGHT: 0.13 kg	SIZE: A3	DWG. NO.: MECH-0015-29April08	REV.: 1.0
		SCALE: 1:1	RELEASED: 05/05/2008	SHEET: 1/1

This drawing is the property of BLUEsat. It may not be reproduced or communicated without our written agreement.