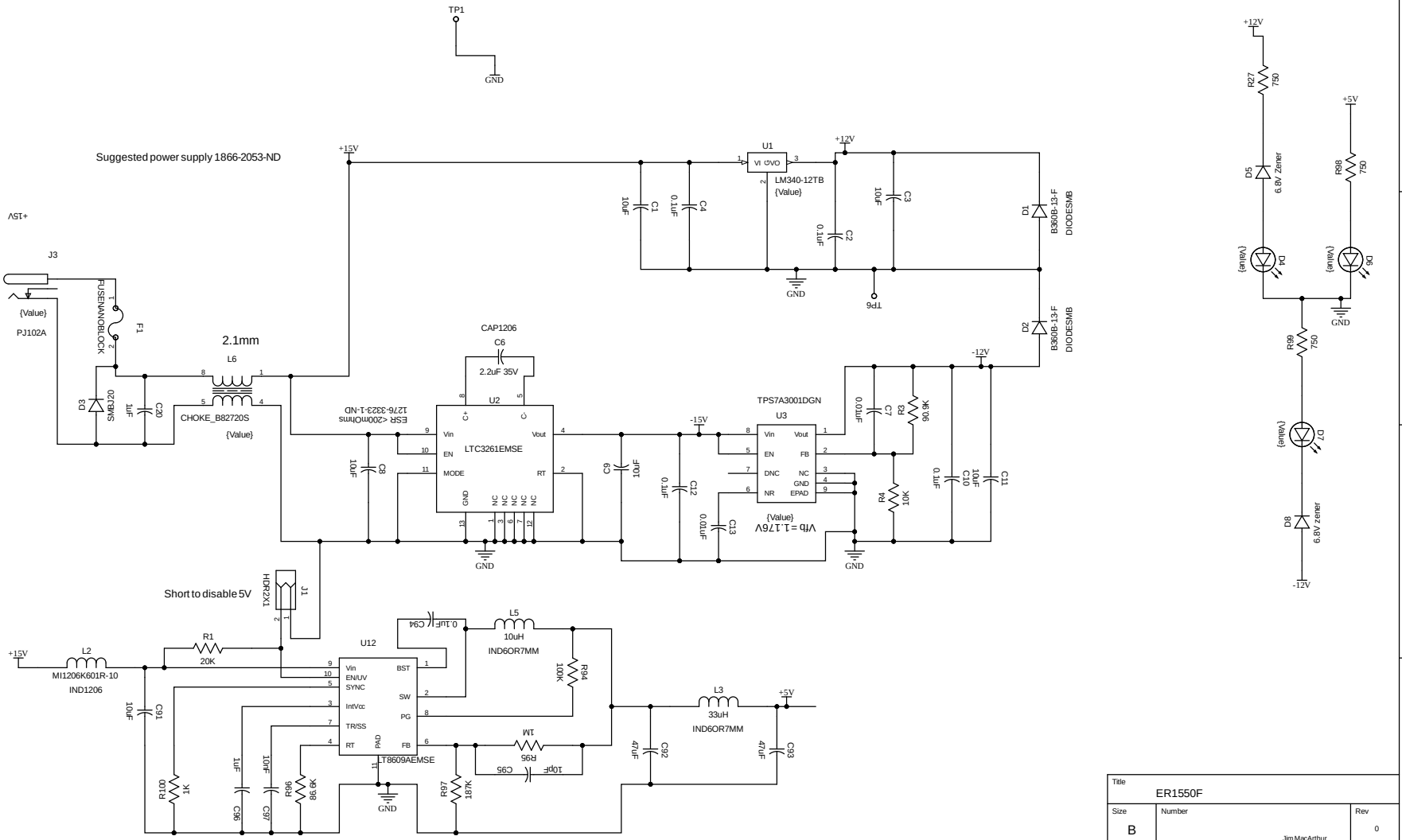

Title	ER1550F	
Size	B	
Number		
Rev	0	
Date	4/28/2025	
Drawn by	Jim MacArthur	
Filename	ER1550F1.SchDoc	
Sheet	1 of 2	

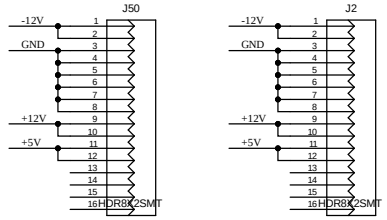

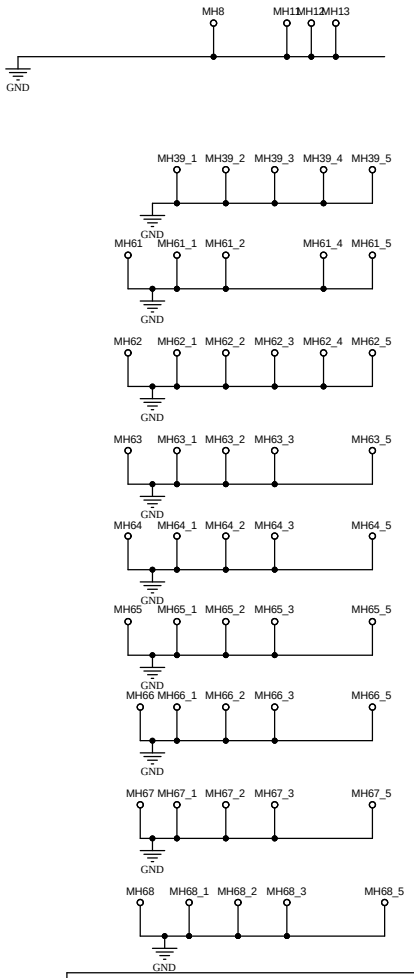

Title	TipTop1550F	
Size B	Number	Rev 0
	Jim MacArthur	
Date 4/28/2025	Drawn by	
Filename ER1550F2.SchDoc	Sheet 2 of 2	