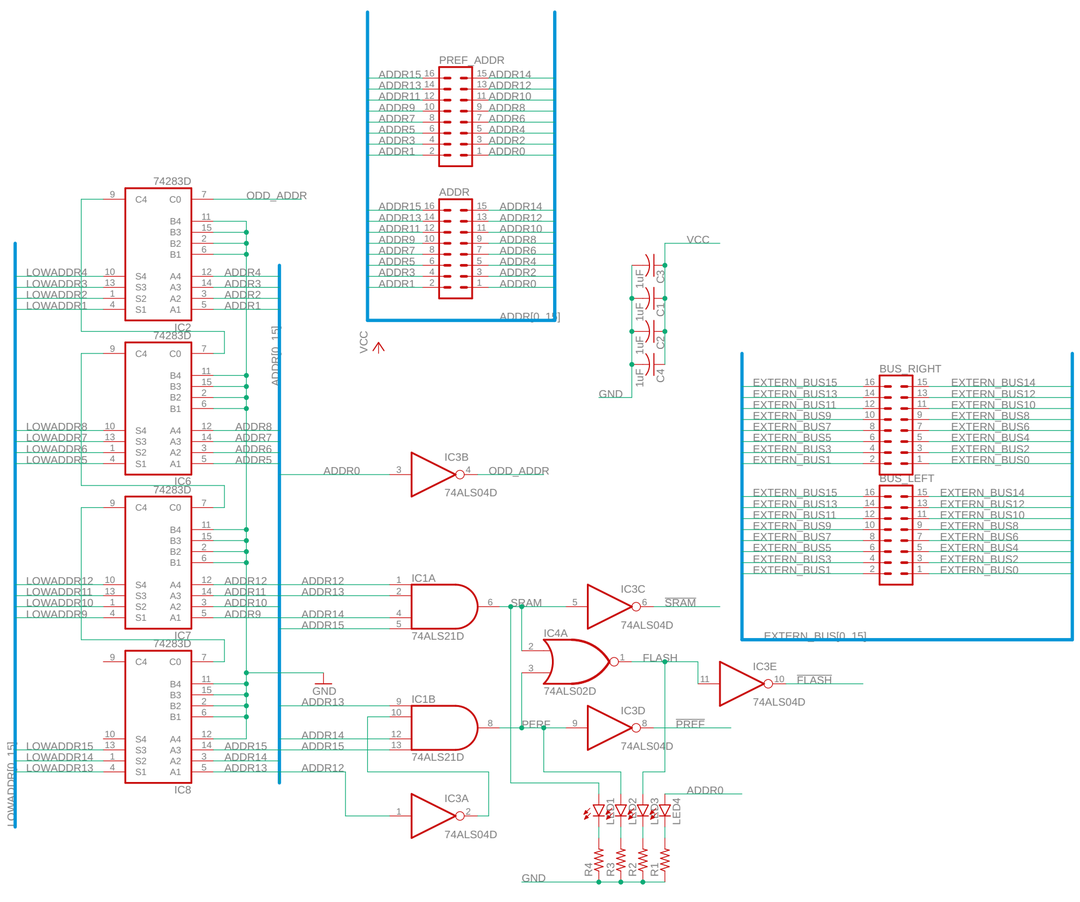
74283D
IC1
IC2
IC6
IC7
IC8
ODD_ADDR
LOWADDR[0..15]
ADDR[0..15]
PREF_ADDR
ADDR
ADDR[0..15]
VCC
GND
IC3B
74ALS04D
IC1A
74ALS21D
IC1B
IC3A
IC3C
IC4A
74ALS02D
IC3D
IC3E
SRAM
FLASH
PREF
BUS_RIGHT
BUS_LEFT
EXTERN_BUS[0..15]
LED1
LED2
LED3
LED4
R1
R2
R3
R4
C1
C2
C3
C4

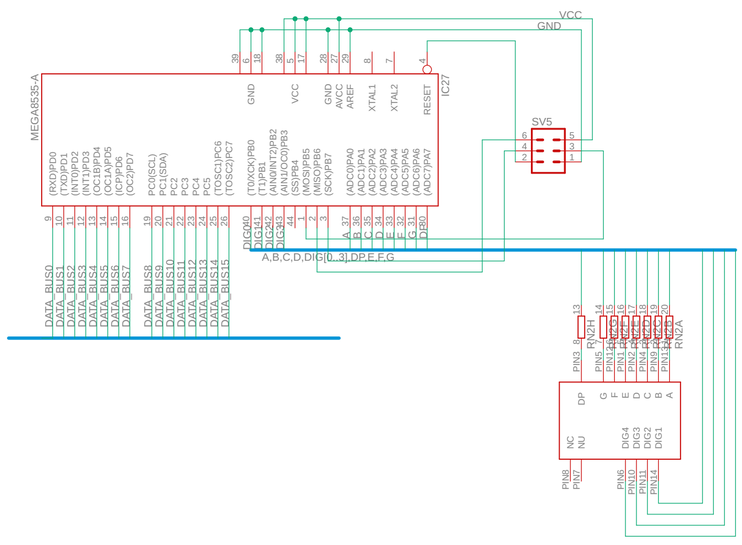
MEGA8535-A
IC27
VCC
GND
SV5
A,B,C,D,DIG[0..3],DP,E,F,G
RN2H
RN2A

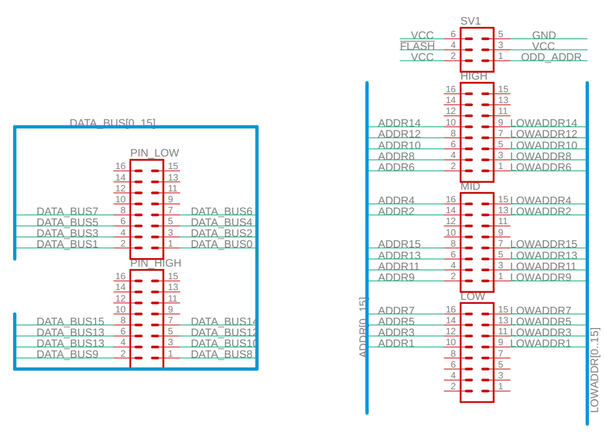
SV1
VCC 6 5 GND
FLASH 4 3 VCC
VCC 2 1 ODD_ADDR
HIGH
ADDR14 10 9 LOWADDR14
ADDR12 8 7 LOWADDR12
ADDR10 6 5 LOWADDR10
ADDR8 4 3 LOWADDR8
ADDR6 2 1 LOWADDR6
MID
ADDR4 16 15 LOWADDR4
ADDR2 14 13 LOWADDR2
ADDR15 8 7 LOWADDR15
ADDR13 6 5 LOWADDR13
ADDR11 4 3 LOWADDR11
ADDR9 2 1 LOWADDR9
LOW
ADDR7 16 15 LOWADDR7
ADDR5 14 13 LOWADDR5
ADDR3 12 11 LOWADDR3
ADDR1 10 9 LOWADDR1
ADDR[0..15]
LOWADDR[0..15]
DATA_BUS[0..15]
PIN_LOW
DATA_BUS7 8 7 DATA_BUS6
DATA_BUS5 6 5 DATA_BUS4
DATA_BUS3 4 3 DATA_BUS2
DATA_BUS1 2 1 DATA_BUS0
PIN_HIGH
DATA_BUS15 8 7 DATA_BUS14
DATA_BUS13 6 5 DATA_BUS12
DATA_BUS13 4 3 DATA_BUS10
DATA_BUS9 2 1 DATA_BUS8

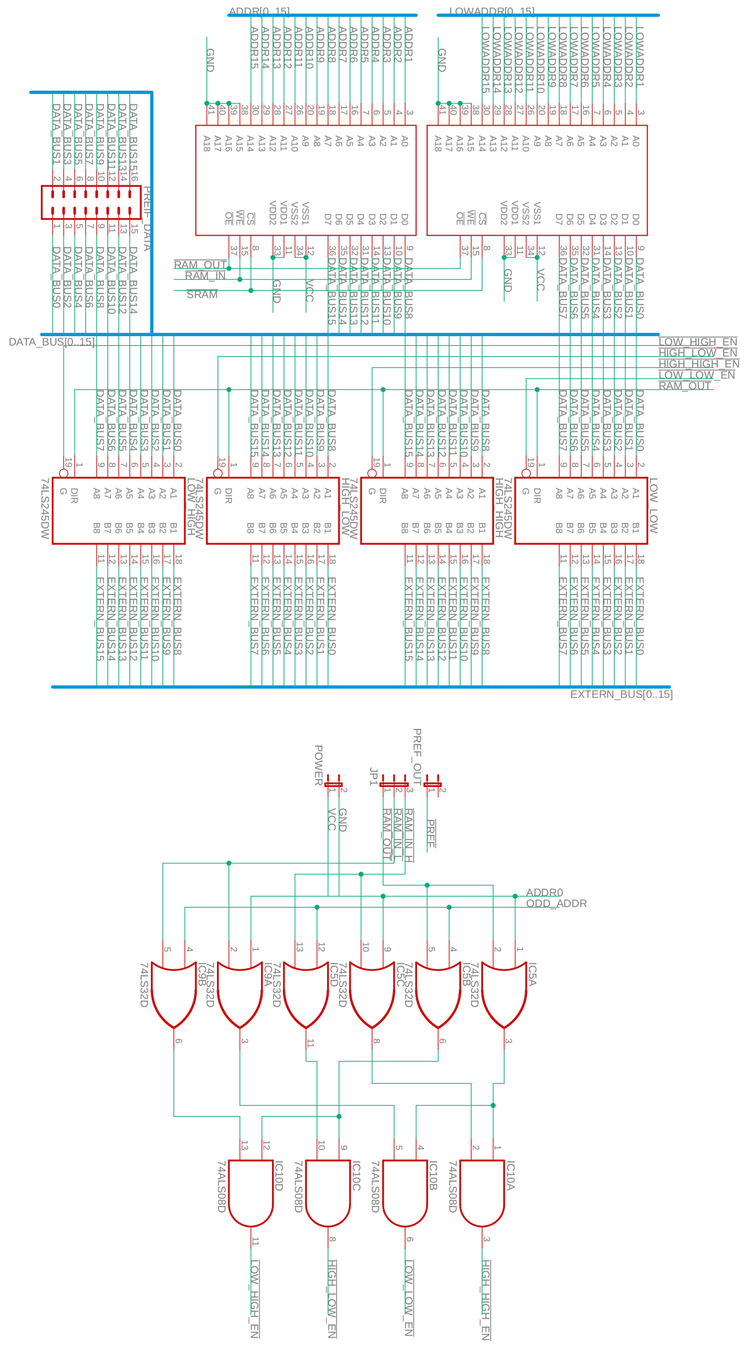
ADDR0_15
LOWADDR0_15
DATA_BUS[0..15]
LOW_HIGH_EN
HIGH_LOW_EN
HIGH_HIGH_EN
LOW_LOW_EN
RAM_OUT
RAM_IN
SRAM
74LS245DW
EXTERN_BUS[0..15]
POWER
JP2
PREF_OUT
PREF
ADDR0
ODD_ADDR
74LS32D
74ALS08D
IC5A
74ALS08D
IC10D
74ALS08D
IC10C
74ALS08D
IC10B
74ALS08D
IC10A
LOW_RIGHT_EN
RIGHT_LOW_EN
LOW_LOW_EN
RIGHT_RIGHT_EN