Undergraduate Research: HUB and Spoke System

Jimena Garcia-Nuno

3 December 2025

Georgia Tech
Aerospace Systems Design Laboratory

Goals

Tasks:

- Redesign CT, HUB, and IAQ PCBs in Eagle
- Correct footprints, routing, and pad clearances
- Eliminate jumper wires with proper vias
- Validate continuity

Learning Objectives:

- Further improve my PCB design skills

Current Transformer (CT)

- Added vias to replace jumper wires
- Created footprints for ADS1115 and 3.5 mm TRRS jack
- Built custom Eagle library for missing components
- Adjusted drill sizes for battery holder and power jack
- Verified continuity and routing reliability

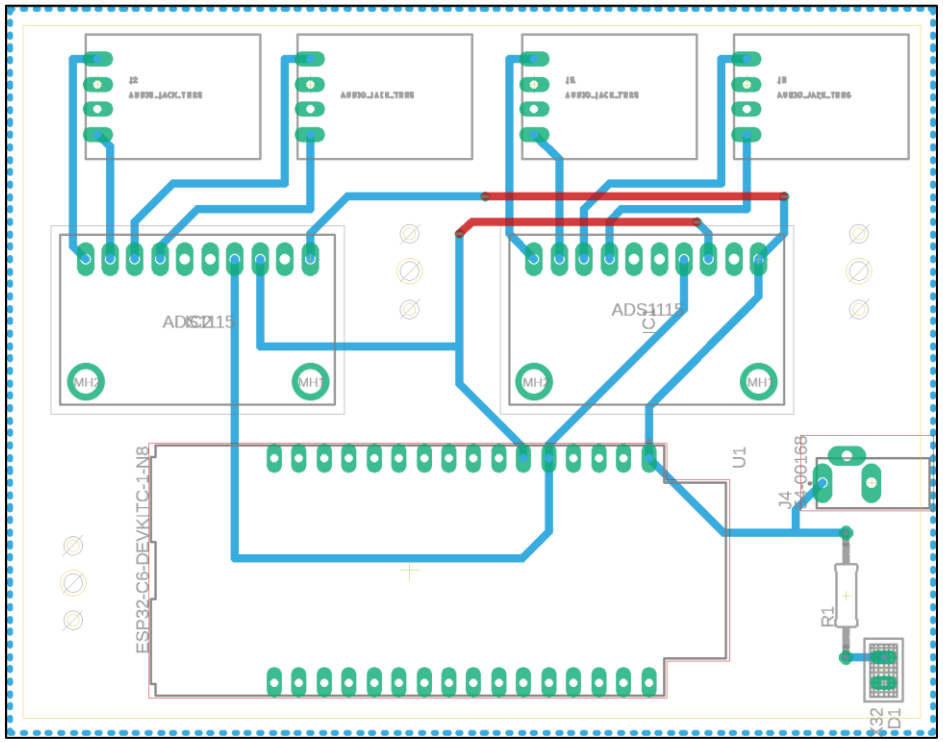

Figure 1. Final .brd file of CT

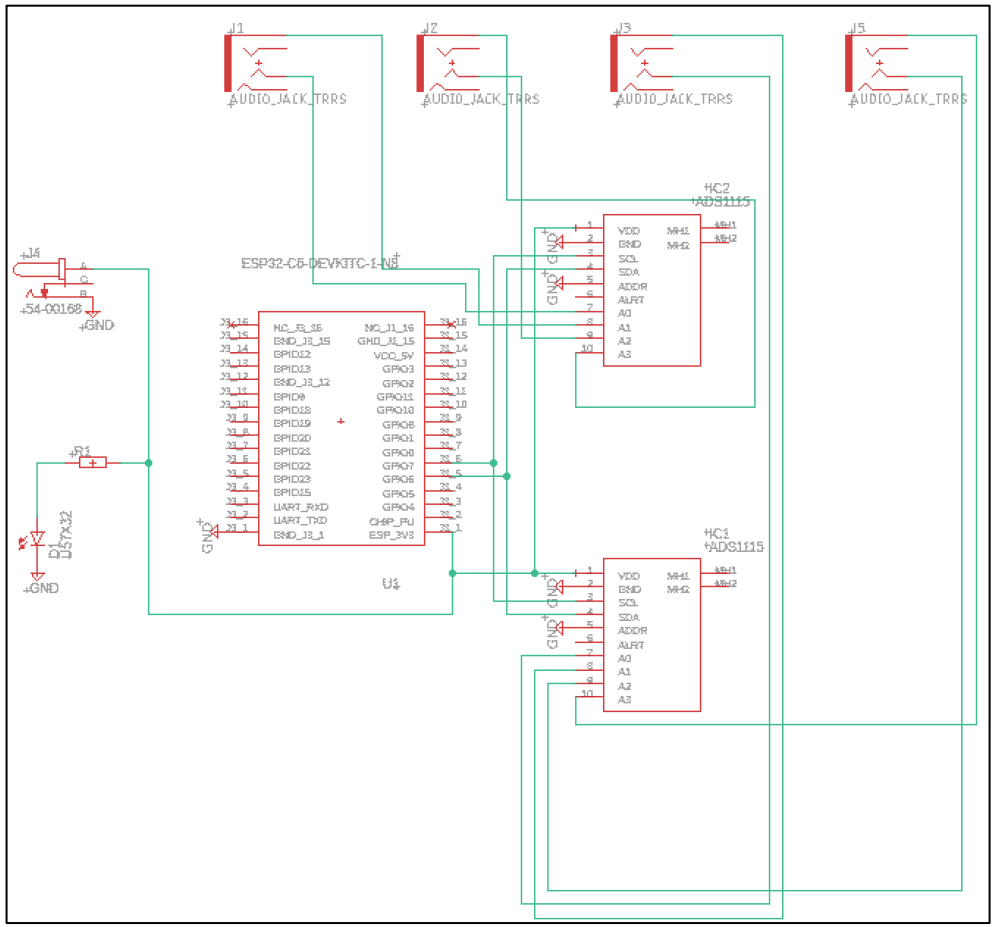

Figure 2. Schematic of CT

HUB

- Created BMP sensor footprint
- Redesigned full board in Eagle
- Recreated complex hexagonal outline
- Added 3 mm mounting holes for enclosure fit
- Verified all footprints against datasheets

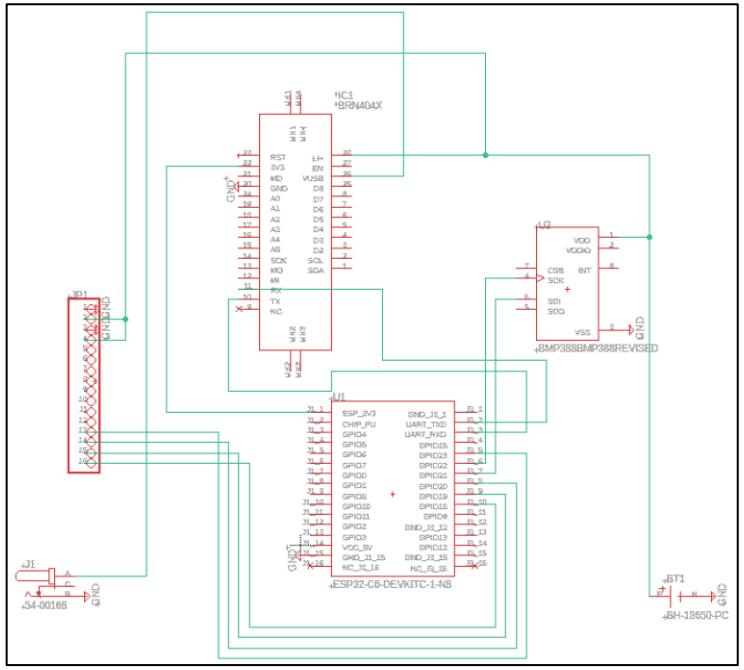

Figure 3. Schematic of the HUB

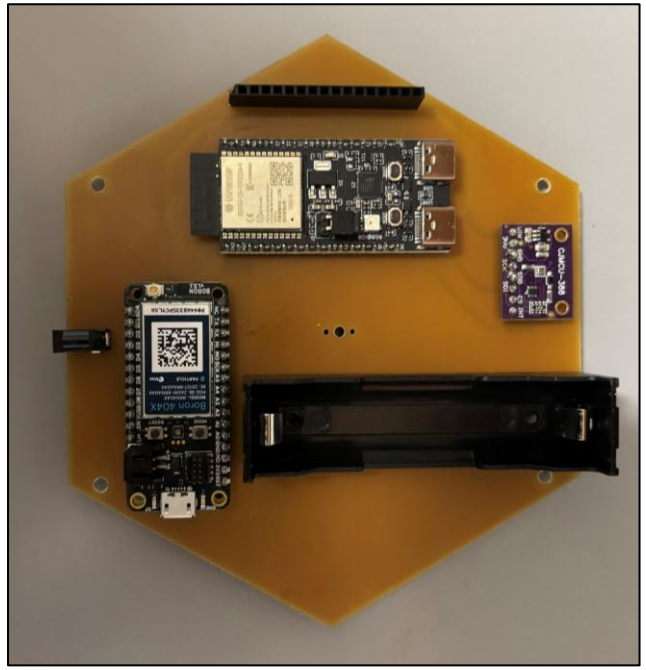

Figure 4. Constructed HUB

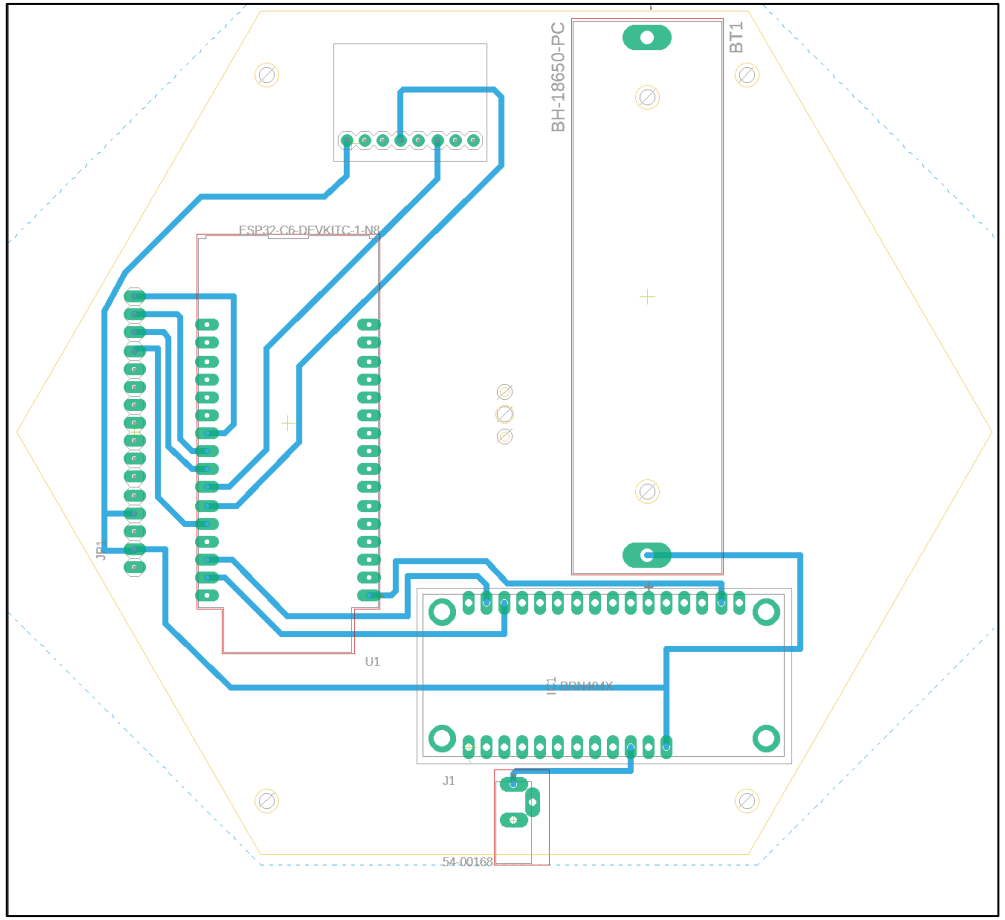

Figure 5. Final .brd file of HUB

Indoor Air Quality Sensor (IAQ)

- Created footprints for PM2.5 breakout and SCD40
- Added vias to eliminate jumper wires
- Adjusted drill sizes for battery holder and power jack
- Added stability through-holes across the board

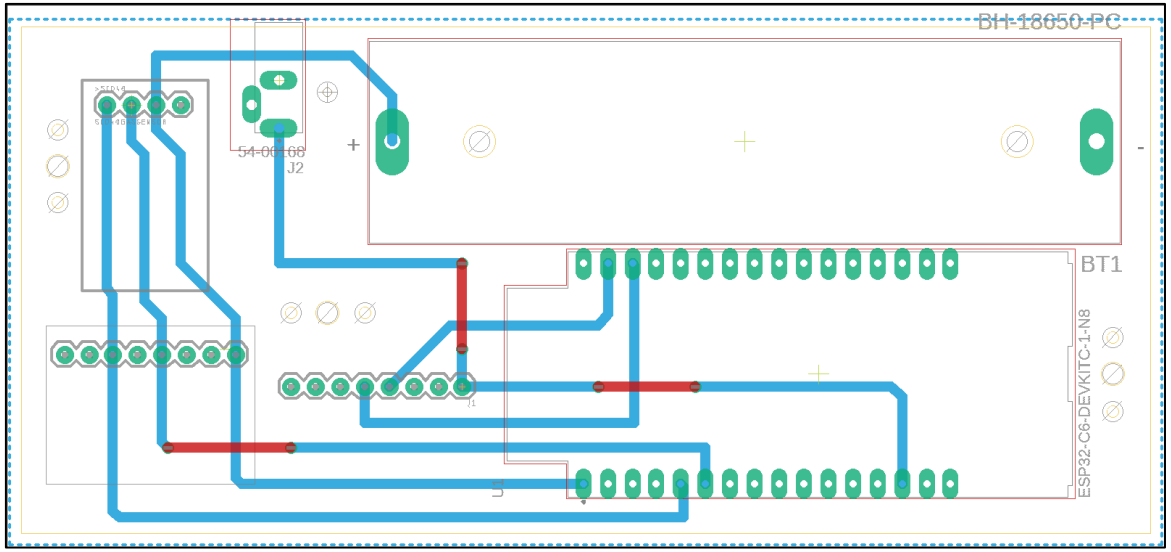

Figure 8. Final .brd file of IAQ

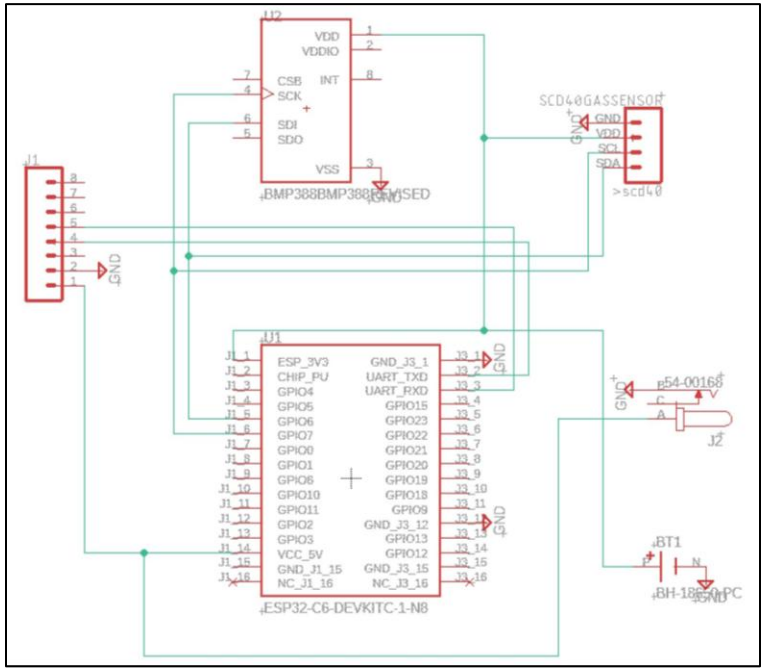

Figure 6. Schematic of IAQ

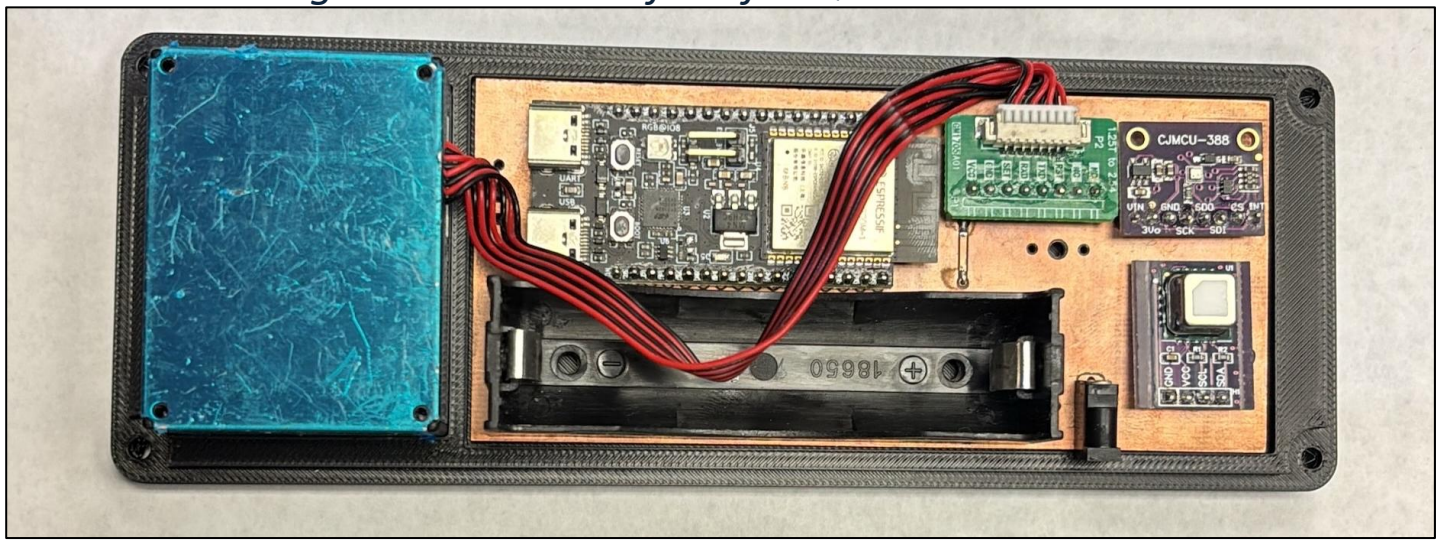

Figure 7. Constructed IAQ

Future Work

Outdoor Air Quality Sensor(OAQ)

- Redesign OAQ PCB: correct footprints and improve clearances

IAQ:

- Revise IAQ for modular, plug-and-play sensor architecture
- Improve flexibility for future development