Enabling fluorescence capability in the quantitative oblique back-illumination microscopy (qOBM) handheld probe

Jimena Garcia-Nuno
Mentor: Srinidhi Bharadwaj
Robles Lab

Georgia Tech

Introduction

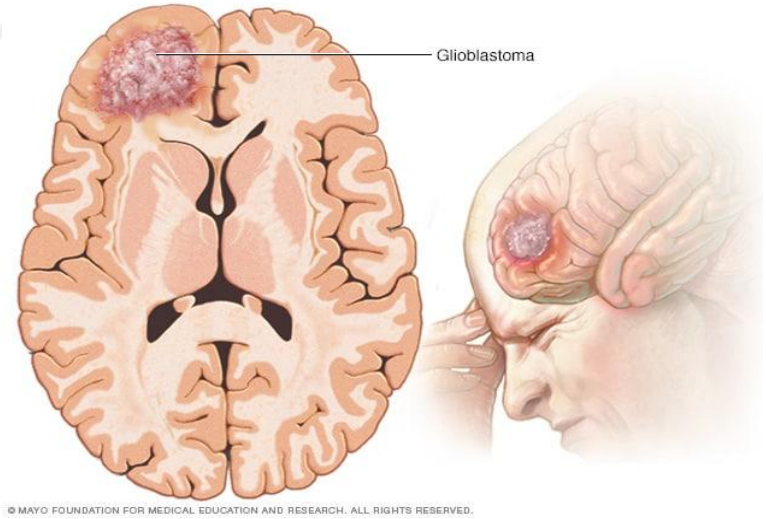

Figure 1: Glioblastoma - Symptoms and Causes [4]

Figure 2: CT of Glioblastoma Pt. [1]

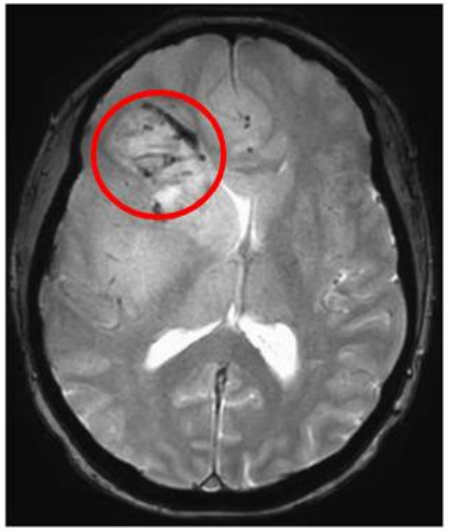

Figure 3: MRI of Glioblastoma Pt. [1]

Figure 4: 5-ALA fluorescing red color [8]

Georgia Tech

Introduction continued

FAD and NADH in the brain

- Fluorescent coenzymes essential in cell reproduction
- Naturally emit fluorescence

- Imbalance in cancer cells:
  - FAD levels decrease
  - NADH levels increase

Georgia Tech

qOBM for In-Vivo diagnosis

Adapted from Srinidhi Bharadwaj's slides

qOBM probe

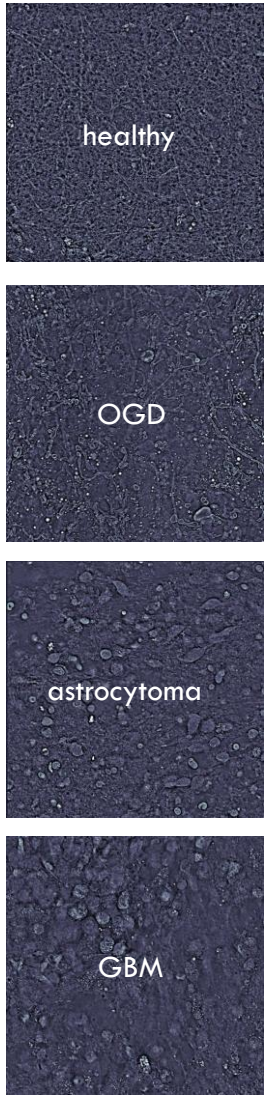

The qOBM probe can provide cellular and subcellular details and structures to determine tumor diagnosis

Goal:

Enable fluorescence capability in the qOBM probe improve diagnosis and treatment of gliomas in the brain.

Why fluorescence imaging?

- See dyes like **5 ALA** intraoperatively
- Activate **FAD and NADH** to detect cancerous cells giving us more diagnostic information to get accurate margins
- Better excision of the tumor increases patient survival

Georgia Tech

How qOBM works

Adapted from Srinidhi Bharadwaj's slides

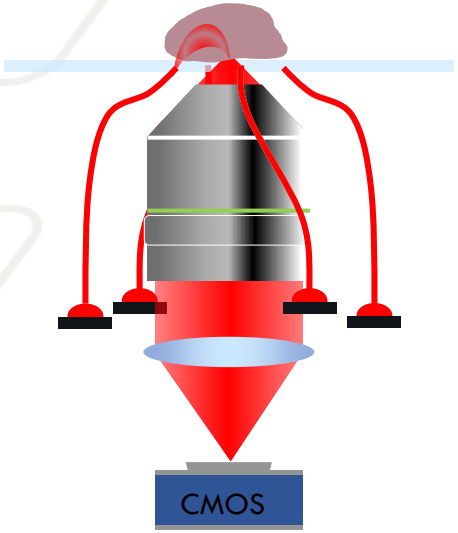

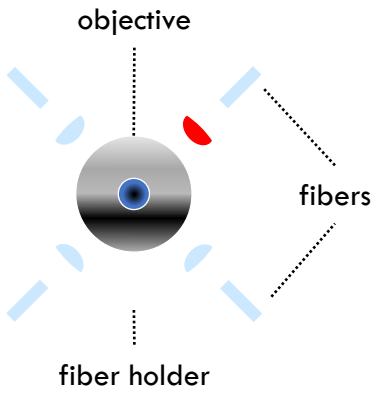

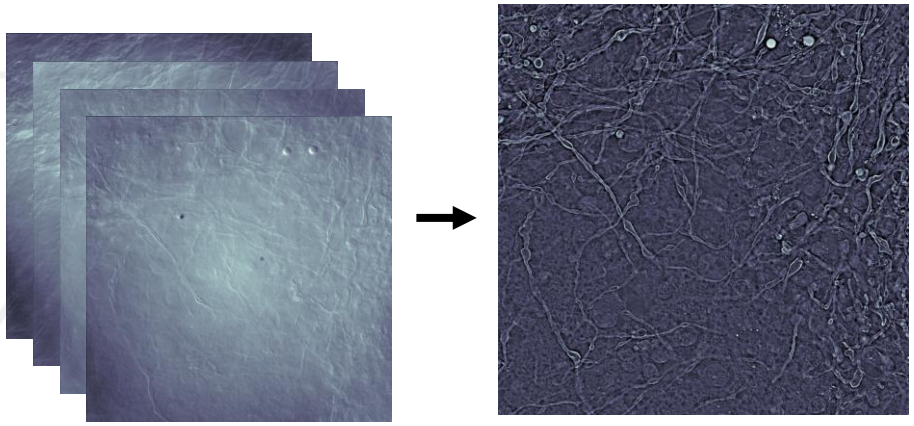

- Fiber based system
- Forward-scattered light is collected
- 4 images are captured and then combined

Georgia Tech

Materials and Methods

- **Fabrication of PCBs :**
  - Circuit design
  - Autodesk Eagle
  - Soldering
- **Programming:**
  - Arduino
  - MATLAB
- **Probe Redesign:**
  - SOLIDWORKS
  - Implement longpass filter
  - 8 openings for fibers
- **Fluorescence Imaging:**
  - Non-biological and biological sample

Probe Setups

Single channel; qOBM

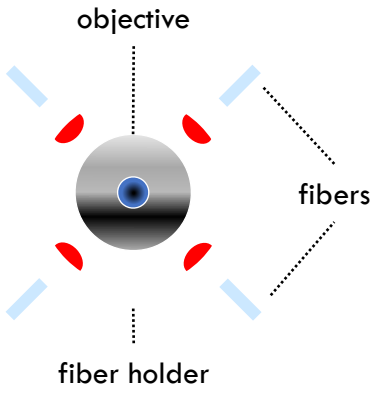

Dual channel; qOBM + fluorescence

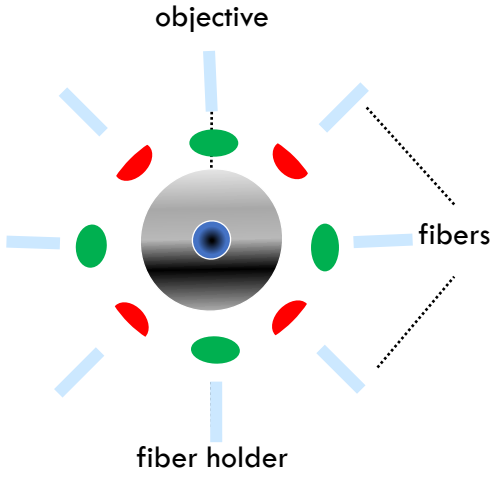

Multi channel; qOBM + multi-fluorescence

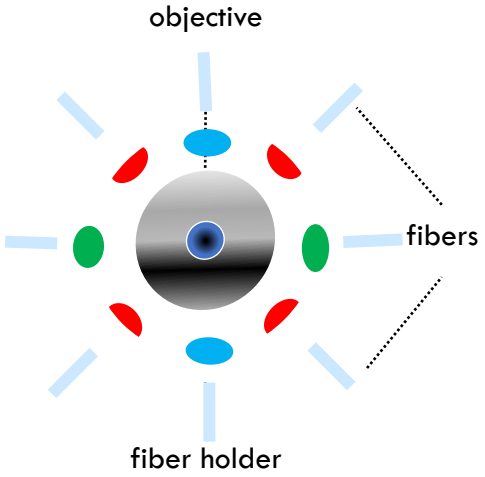

Georgia Tech

Fabrication of PCB #1

Schematic of qOBM circuit

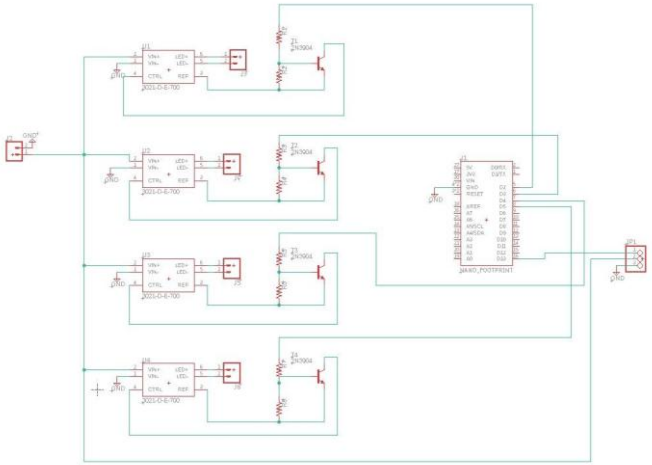

PCB layout

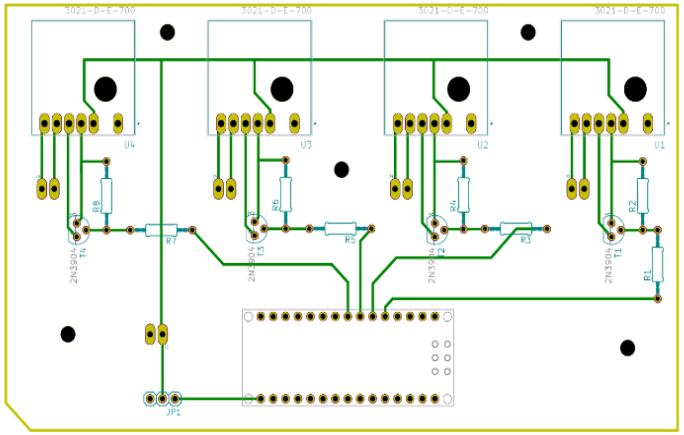

PCB Setup

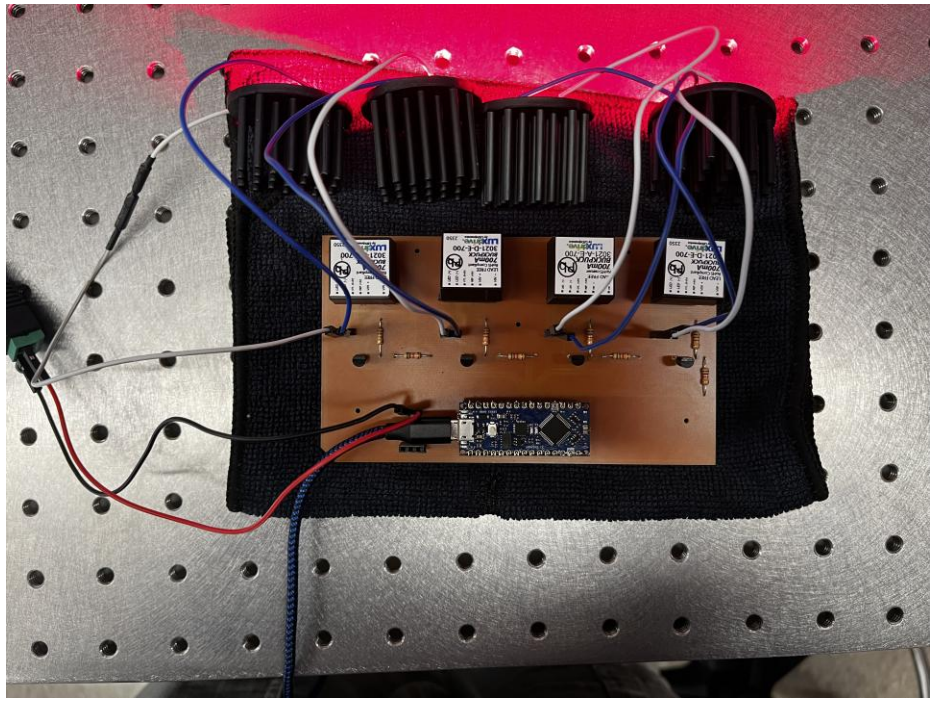

Georgia Tech

Fabrication of PCB #2

Schematic of 8 driver PCB

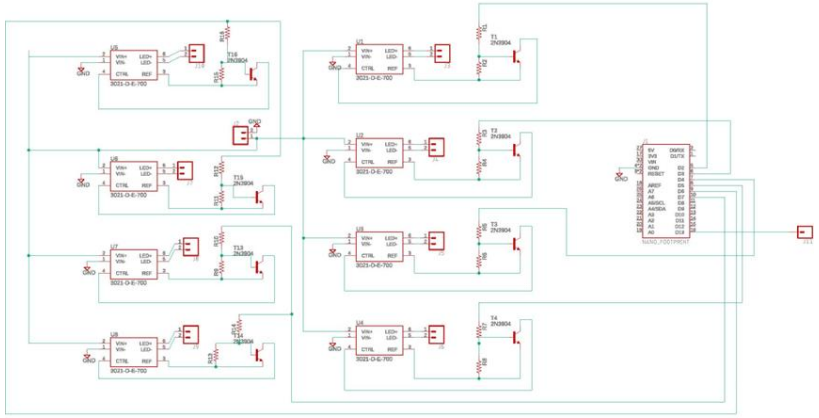

PCB layout

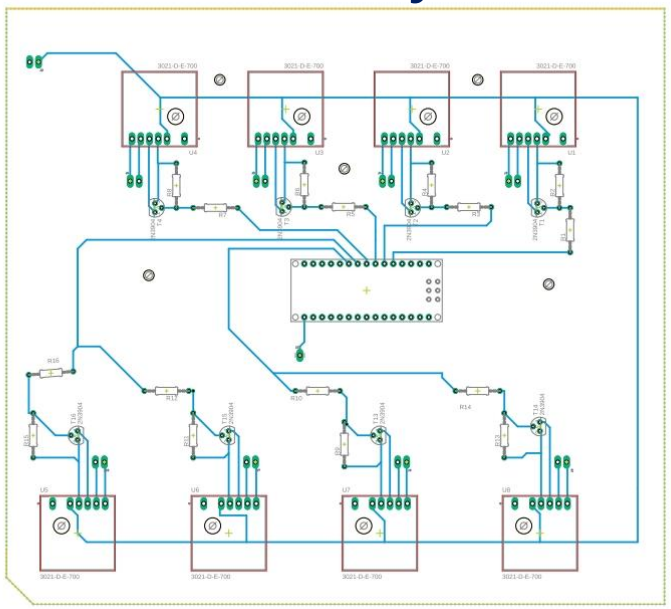

PCB Setup

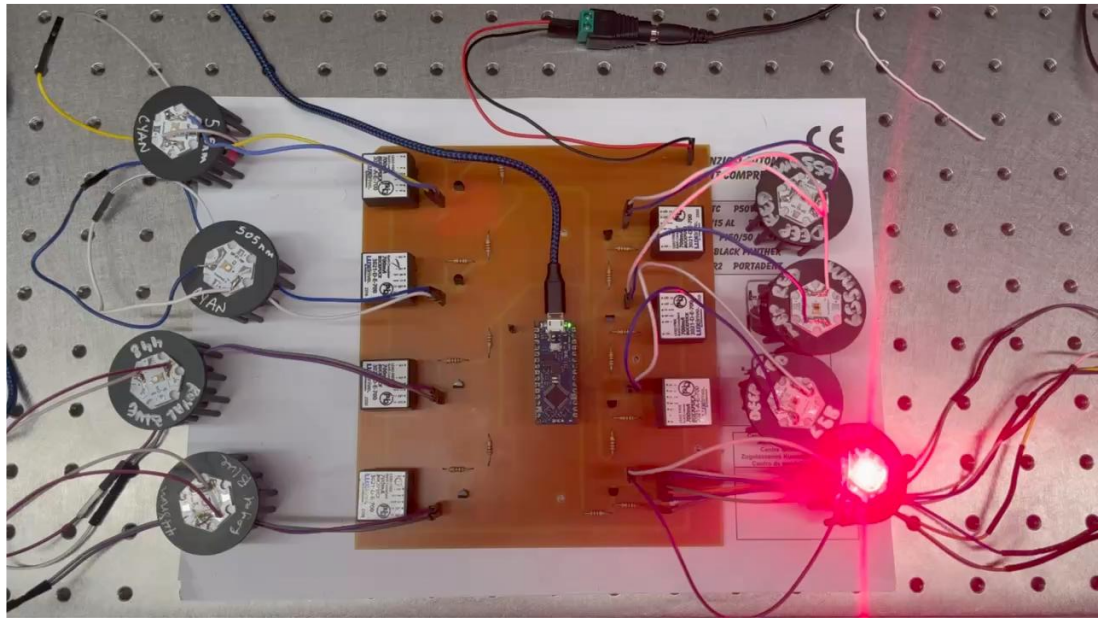

Georgia Tech

Multi-Fluorescent qOBM probe prototype

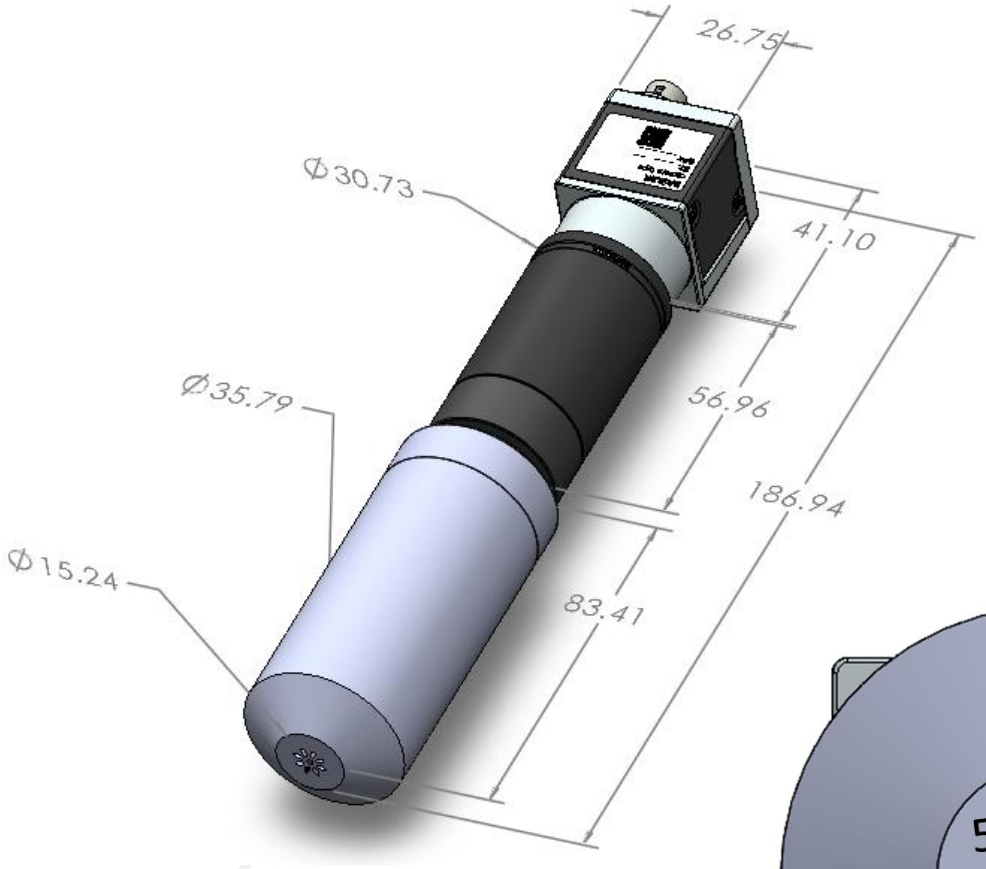

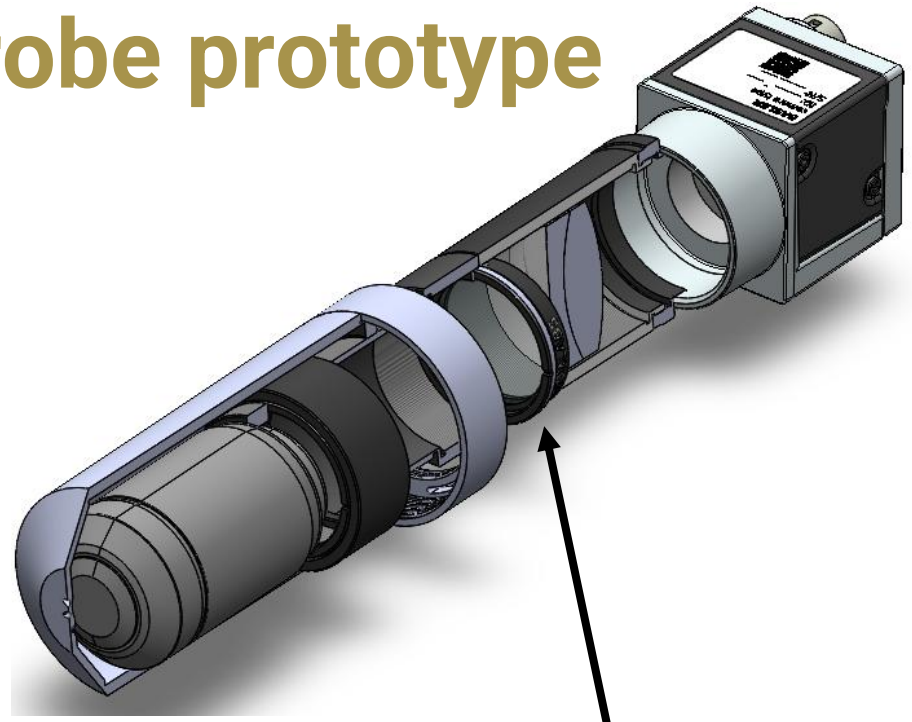

long-pass filter

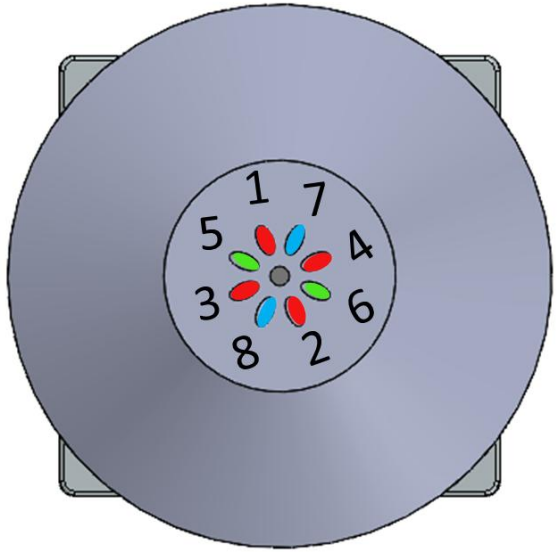

Georgia Tech

New version of qOBM app

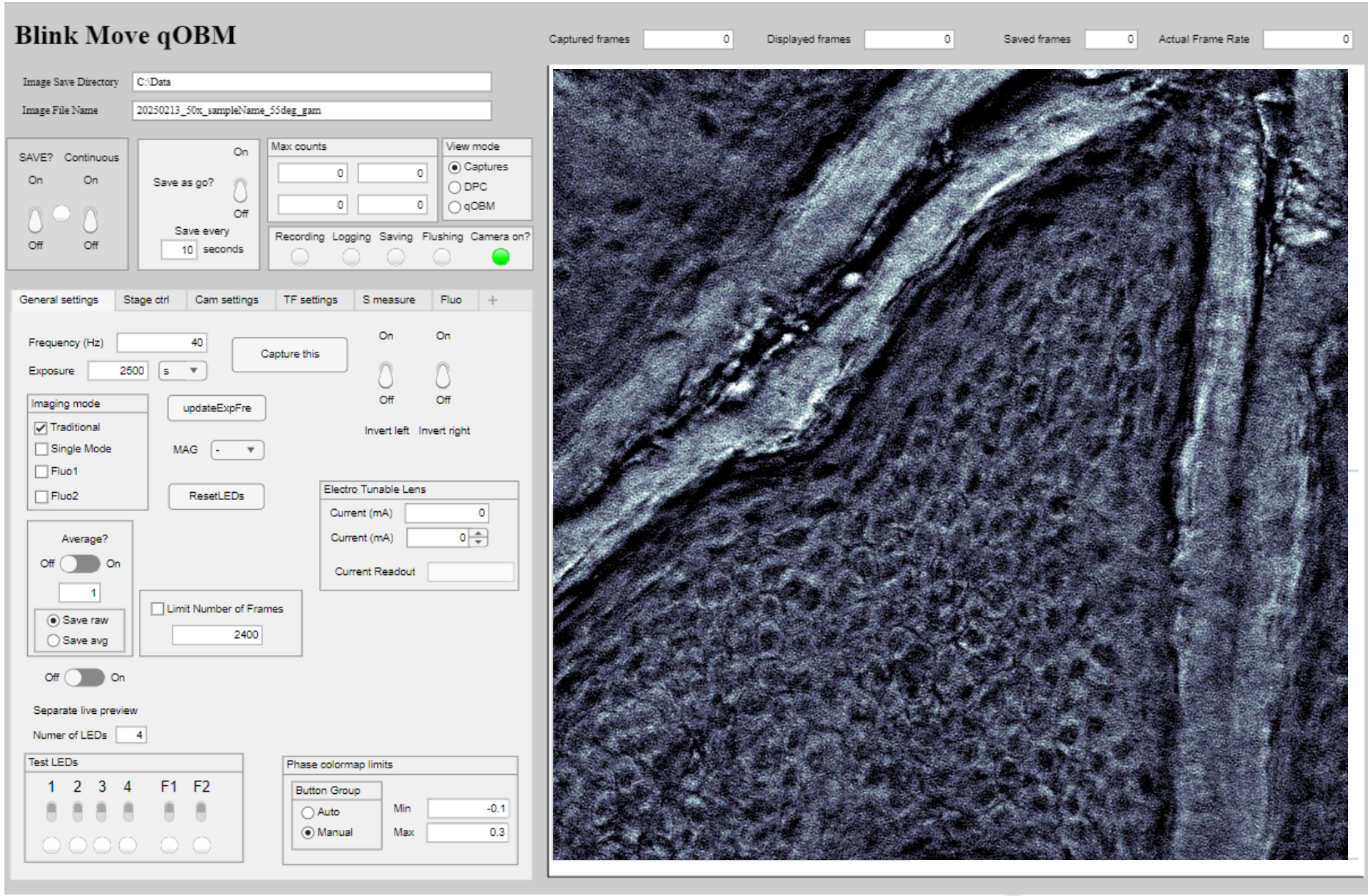

Georgia Tech

Conclusion

- Designed & built PCBs for qOBM and Multi-channel qOBM systems
- Designed multi-channel probe prototype
- New version of the MATLAB app with fluorescence imaging capabilities
- This could provide diagnostic information for precise tumor margins intraoperatively, **improving survival for glioma patients**

References

1. Abd-Elghany, A. A., Naji, A. A., Alonazi, B., Aldosary, H., Alsufayan, M. A., Alnasser, M., Mohammad, E. A., & Mahmoud, M. Z. (2019). Radiological characteristics of glioblastoma multiforme using CT and MRI examination. Journal of Radiation Research and Applied Sciences, 12(1), 289–293. https://doi.org/10.1080/16878507.2019.1655864
2. Blanchet, L., Krooshof, P., Postma, G., Idema, A., Goraj, B., Heerschap, A., & Buydens, L. (2010). Discrimination between Metastasis and Glioblastoma Multiforme Based on Morphometric Analysis of MR Images. American Journal of Neuroradiology, 32(1), 67–73. https://doi.org/10.3174/ajnr.a2269
3. Costa, P. C., Guang, Z., Ledwig, P., Zhang, Z., Neill, S., Olson, J. J., & Robles, F. E. (2021). Towards in-vivo label-free detection of brain tumor margins with epi-illumination tomographic quantitative phase imaging. Biomedical Optics Express, 12(3), 1621–1634. https://doi.org/10.1364/BOE.416731
4. Glioblastoma - Symptoms and causes. (n.d.). Mayo Clinic. https://www.mayoclinic.org/diseases-conditions/glioblastoma/symptoms-causes/syc-20569077
5. Guang, Z., Ledwig, P., Costa, P. C., Filan, C., & Robles, F. E. (2022). Optimization of a flexible fiber-optic probe for epi-mode quantitative phase imaging. Optics Express, 30(11), 17713–17729. https://doi.org/10.1364/OE.454997
6. Ledwig, P., & Robles, F. E. (2019). Epi-mode tomographic quantitative phase imaging in thick scattering samples. Biomedical optics express, 10(7), 3605–3621. https://doi.org/10.1364/BOE.10.003605
7. Ledwig, P., & Robles, F. E. (2021). Quantitative 3D refractive index tomography of opaque samples in epi-mode. Optica, 8(1), 6–14. https://doi.org/10.1364/optica.410135
8. Obrador, E., Moreno-Murciano, P., Oriol-Caballo, M., López-Blanch, R., Pineda, B., Gutiérrez-Arroyo, J. L., Loras, A., Gonzalez-Bonet, L. G., Martinez-Cadenas, C., Estrela, J. M., & Marqués-Torrejón, M. Á. (2024). Glioblastoma Therapy: Past, Present and Future. International Journal of Molecular Sciences, 25(5), 2529. https://doi.org/10.3390/ijms25052529

Georgia Tech

Acknowledgements

- Srinidhi Bharadwaj
- Zhenmin Li
- PI: Francisco Robles
- South Atlanta High School

BURROUGHS WELLCOME FUND

EMORY UNIVERSITY

Georgia Tech

NSF

CMaT

ENGAGES

NIH National Institute of Biomedical Imaging and Bioengineering | Technologies to Shape the Future of Health

NIH National Institute of General Medical Sciences

Georgia Tech