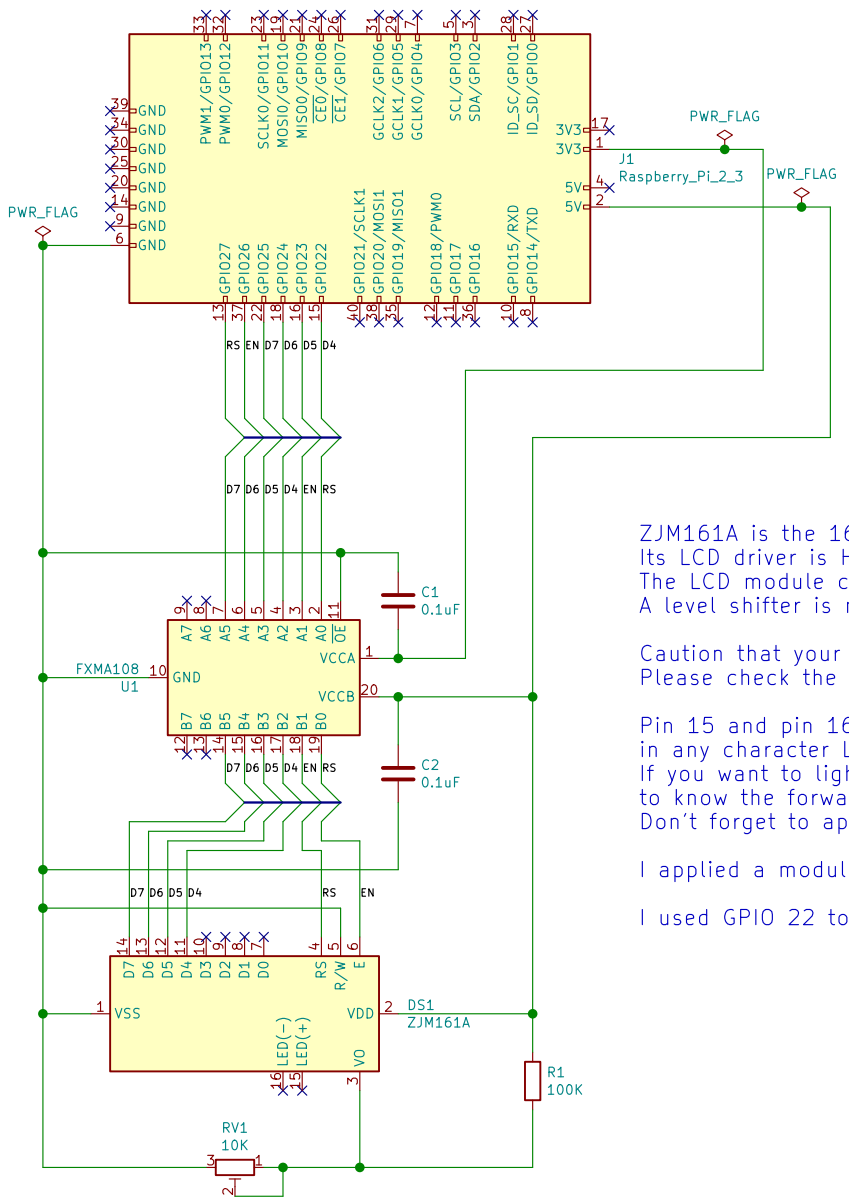

ZJM161A is the 16 characters * 1 line LCD module.
Its LCD driver is HD44870, and there is no LED backlight.
The LCD module can drive by 5V. Besides, Raspberry Pi outputs 3.3V.
A level shifter is needed between Raspberry Pi and the LCD module.

Caution that your LCD module may have different pin assignments from ZJM161A.
Please check the data sheet of your LCD module.

Pin 15 and pin 16 are typically assigned for the anode and cathode of the LED backlight in any character LCD module.
If you want to light the LED, check the data sheet of your LCD module to know the forward voltage and the forward current of the LED.
Don't forget to apply any proper resistor between 5V power supply and the anode of the LED.

I applied a module embedded FXMA108 and two bypass capacitors.

I used GPIO 22 to GPIO 27 of Raspberry Pi as outputs for the LCD module in my project.

This schematic is exempt from warranty, responsibility, and liability from any kind and any damage.

Copyright © 2019 Kenta Ishii. All Rights Reserved.
JimmyKenMerchant

Sheet: /
File: lcd_levelshifter.sch

Title: Character LCD with Level Shifter

Size: A4	Date: 2019-07-09	**Rev: 1.0.0**
KiCad E.D.A. kicad (5.1.2)-2		Id: 1/1