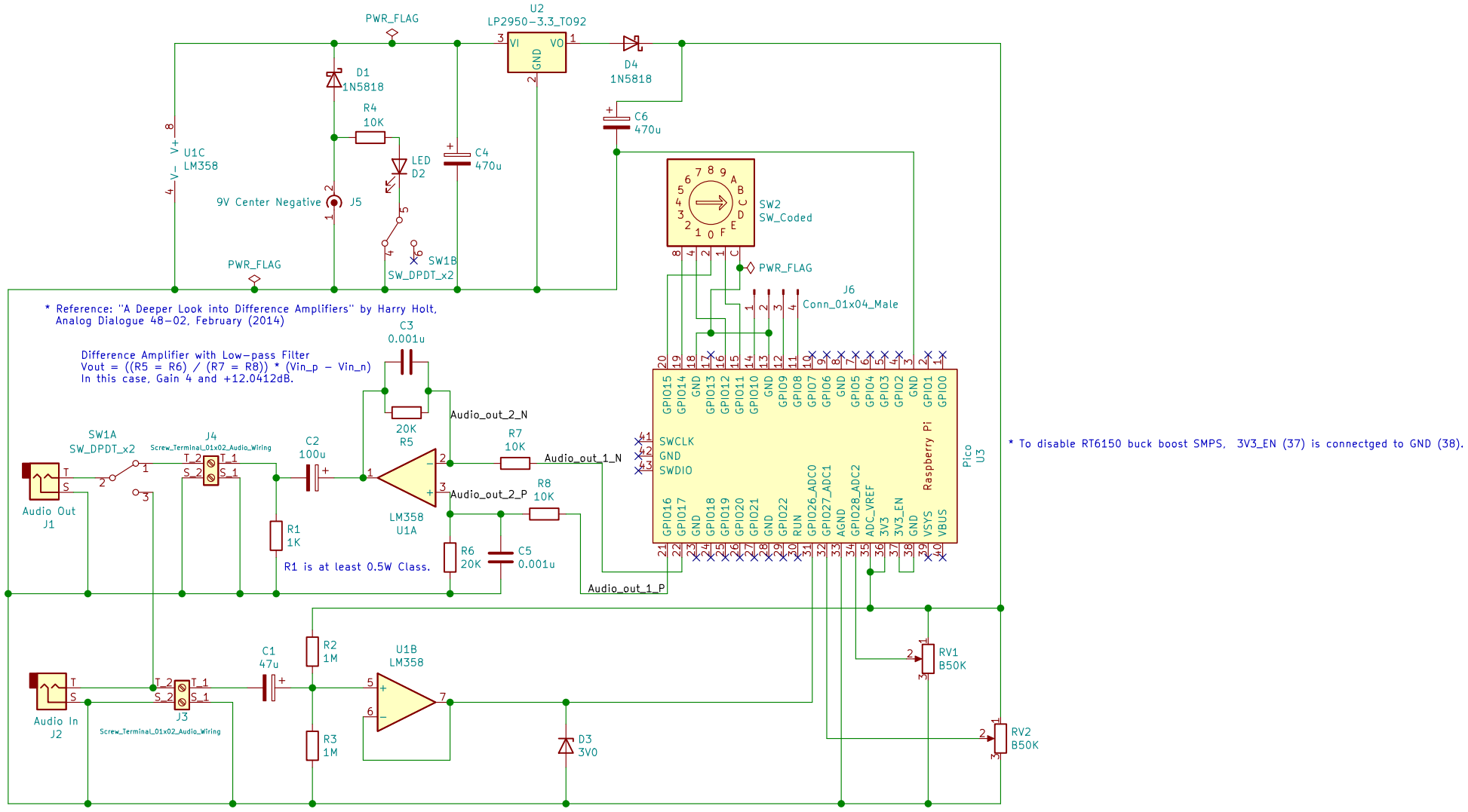

This schematic is exempt from warranty, responsibility, and liability from any kind and any damage.

Copyright © 2021 Kenta Ishii. All Rights Reserved.

JimmyKenMerchant

Sheet: /
File: pedal_pico.sch

Title: Audio In and Out for Pedal Multi with Pico

Size: A4	Date: 2021-06-11	**Rev: 1.06**
KiCad E.D.A. kicad 5.1.10-88a1d61d5888ubuntu20.04.1		Id: 1/1