DRV8305 BreadBoard Pluggable Test Board

- Input Voltage: 12V 24V
- DRV8305 + 6 DMN6068LK-3
- Breadboard Pluggable. Will be tested with STM32F411
- Every component will be hand soldered. Smallest Component size 0603

Power Port

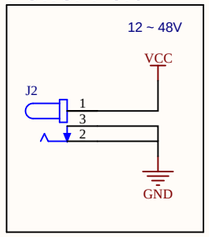

Bulk Capacitance

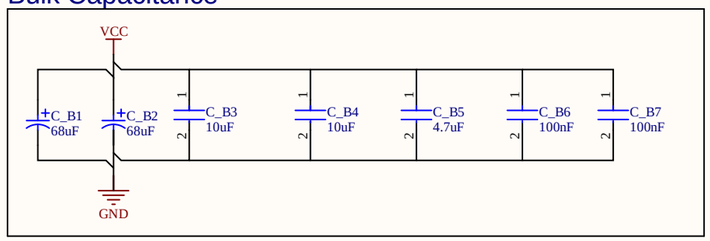

Breadboard Connector

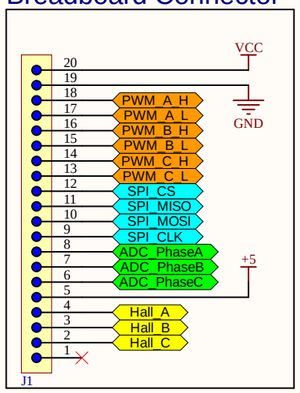

Hall Sensor Connector

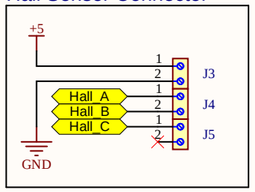

Resistor divider: 27.4k (top) + 10k (bottom) from 3.3V → Vref = 0.88V

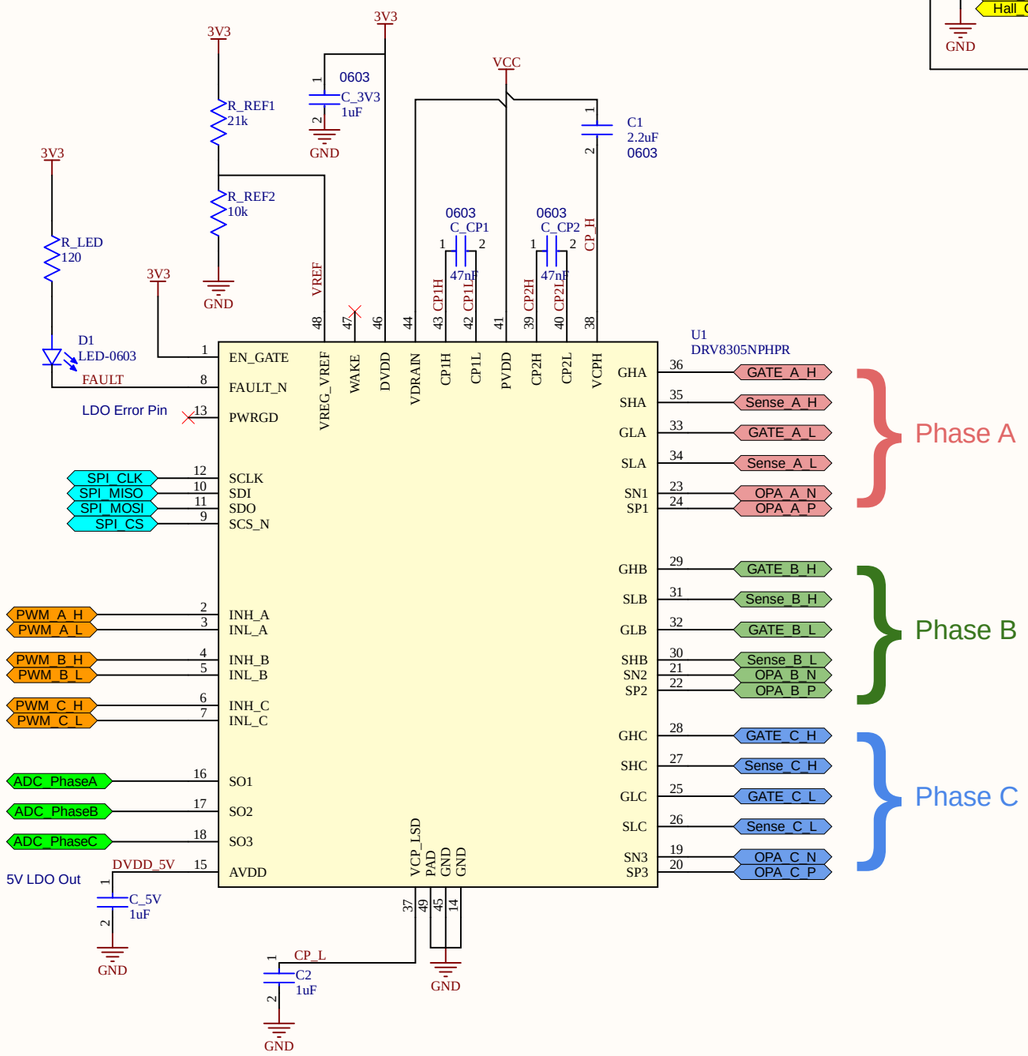

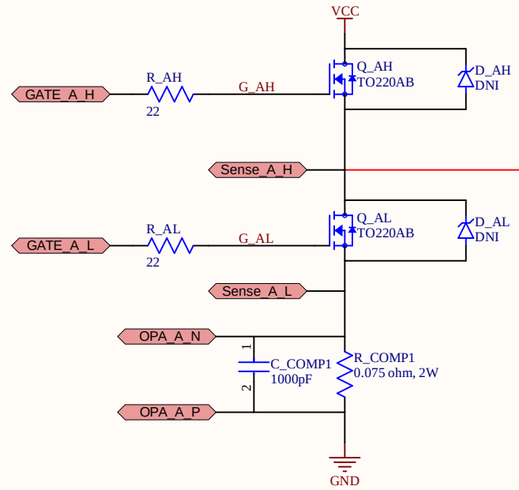

DMN6068LK3-13
- RdsON: 68 mΩ @ 12 A, Vgs = 10 V
- Vgs(th): 3 V max @ 250 µA
- Gate charge (Qg): 10.3 nC @ 10 V
- Max Vgs: ±20 V
- Input capacitance (Ciss): 502 pF @ 30 V
- Power dissipation: 2.12 W (Ta)
- Package: TO-252-3 (DPAK) - eaeist solder

Changed to DMN6068SEQ (SOT223)

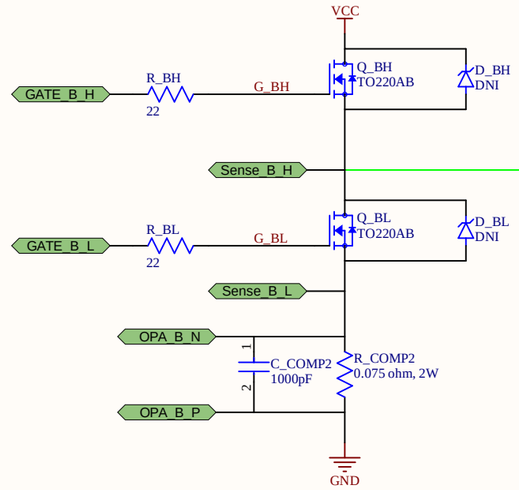

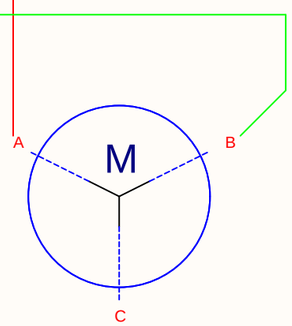

Motor
- R: 0.058Ω
- L: 0304mH
- 12 Pole, 14 Stator
- Run 2S 4S Configuration

Motor electrical speed:
- Pole pairs = 14 poles / 2 = 7
- Electrical RPM (ERPM) = Mechanical RPM * Pole pairs
- At 11100 rpm: ERPM = 11100 * 7 = 77700
- Electrical frequency (Hz) = ERPM / 60 = 1295 Hz
- 6 step commutation frequency = 6 * electrical frequency = 7770 steps per second

STM32F411 ADC capability:
- Maximum ADC sampling rate approx 2.4 MSPS
- Practical sampling rate approx 1 to 2 MSPS
- Electrical period at 1295 Hz is approx 772 microseconds
- Samples per electrical period at 1 MSPS is approx 772 samples
- ADC speed is far above what is required for this motor

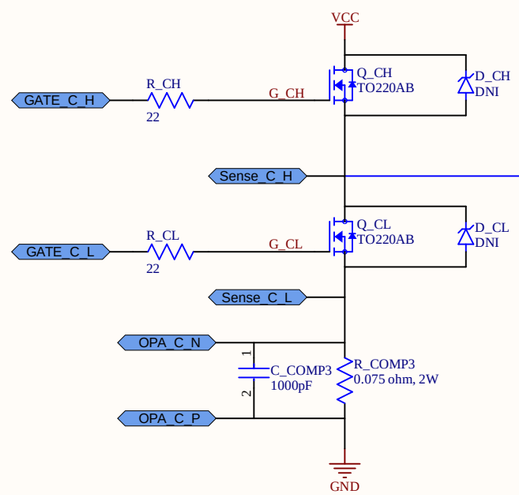

Title		
Size A	Number	Revision
Date: 3/30/2026	Sheet of	
File: C:\Users\..\DRV8305.SchDoc	Drawn By:	

DRV8305 Test Board for Breadboard

View from Top side (Scale 2:1)

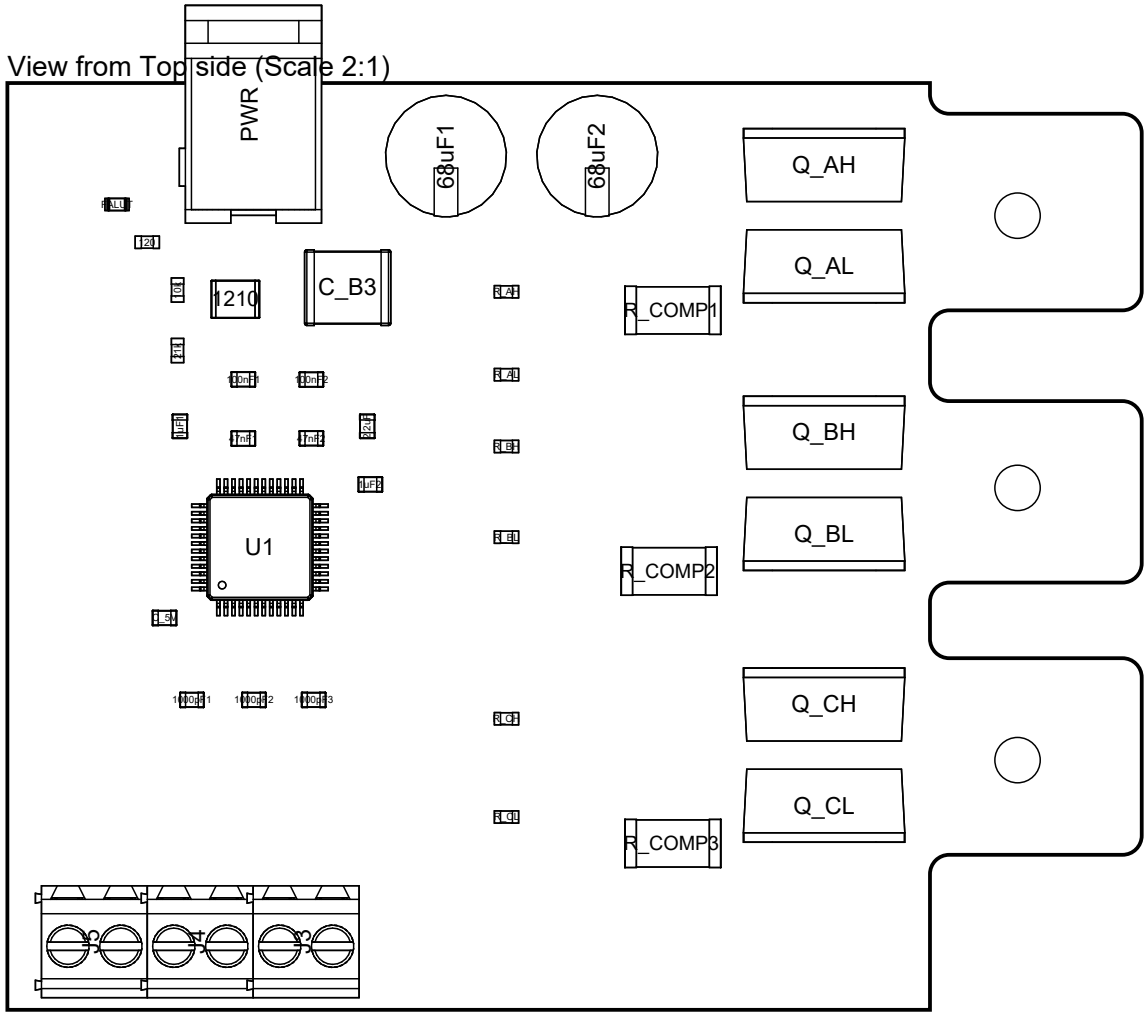

Bill Of Materials

Line #	Designator	Comment	Quantity
1	C1	2.2uF	1
2	C2, C_3V3, C_5V	1uF	3
3	C_B1, C_B2	68uF	2
4	C_B3	10uF	1
5	C_B5	4.7uF	1
6	C_B6, C_B7	100nF	2
7	C_COMP1, C_COMP2, C_COMP3	1000pF	3
8	C_CP1, C_CP2	47nF	2
9	D1	LED-0603	1
10	J1	61300411121	1
11	J2	24V ~3A	1
12	J3, J4, J5	691214110002	3
13	Q_AH, Q_AL, Q_BH, Q_BL, Q_CH, Q_CL	TO220AB	6
14	R_AH, R_AL, R_BH, R_BL, R_CH, R_CL	22	6
15	R_COMP1, R_COMP2, R_COMP3	0.075 ohm, 2W	3
16	R_LED	120	1
17	R_REF1	21k	1
18	R_REF2	10k	1
19	U1	DRV8305NPHPR	1

Top Layer (Scale 3:2)

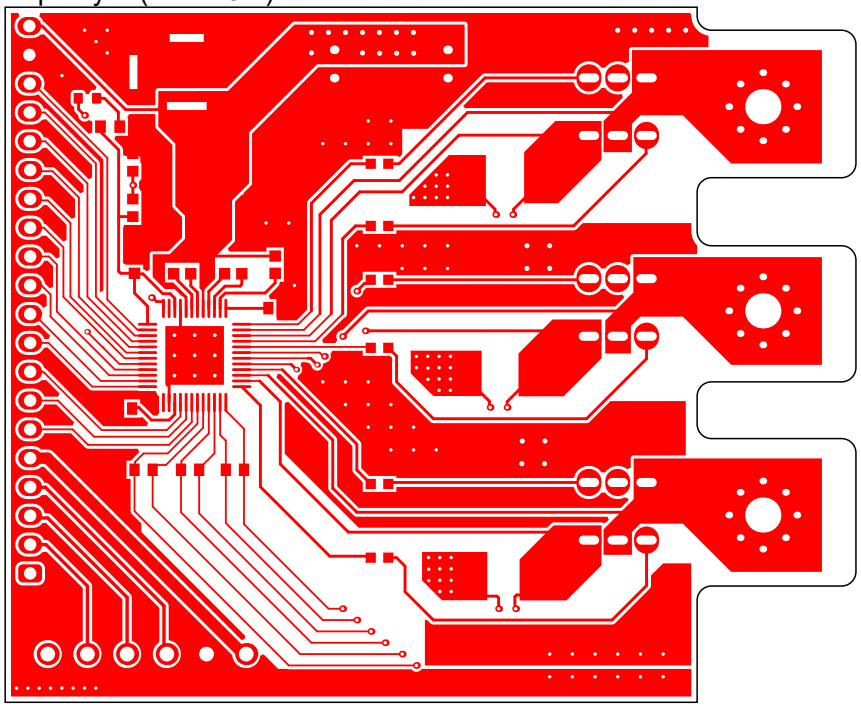

Top Solder (Scale 3:2)

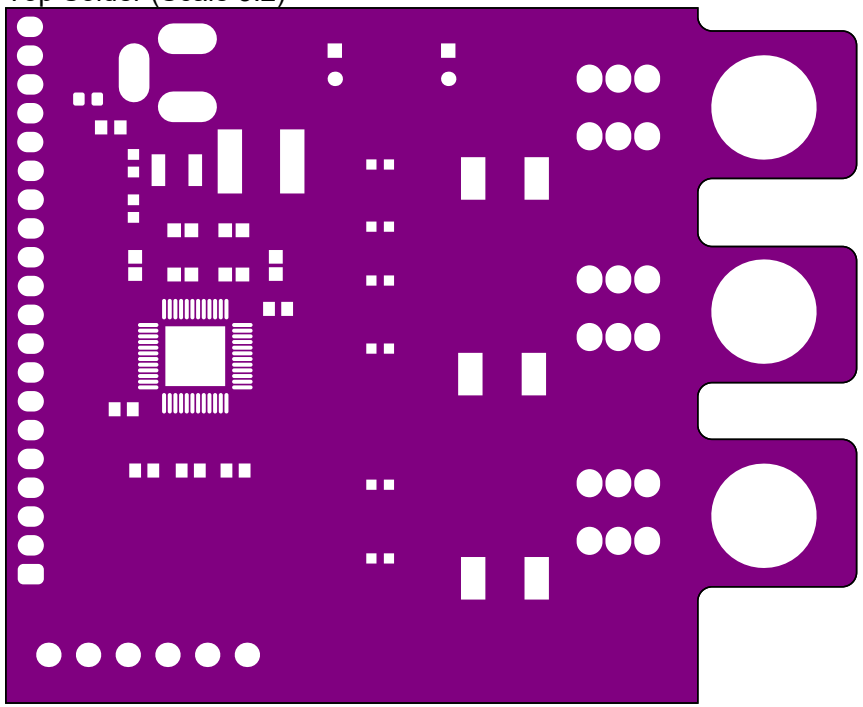

Bottom Layer (Scale 3:2)

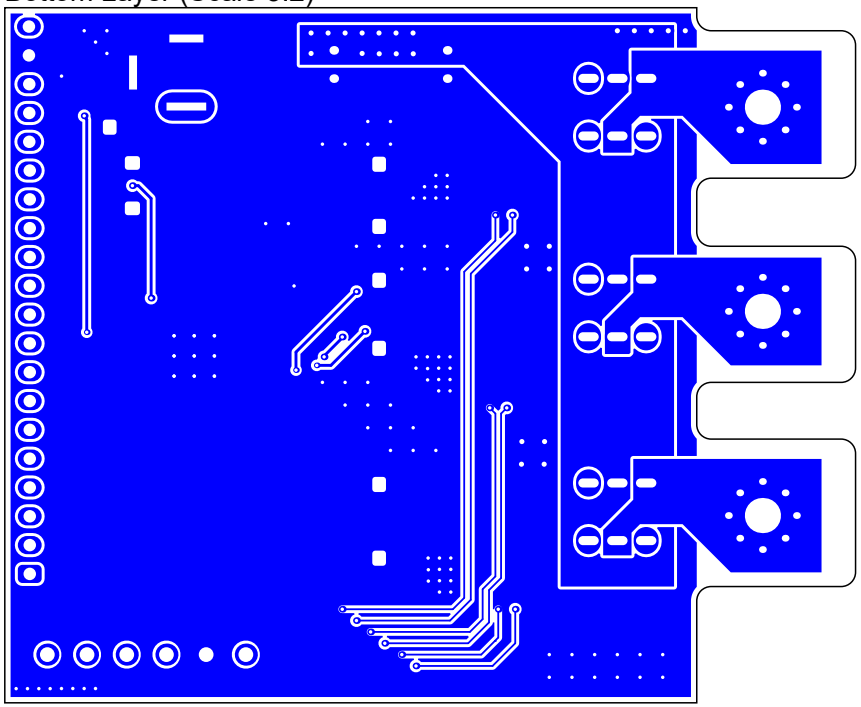

Bottom Solder (Scale 3:2)

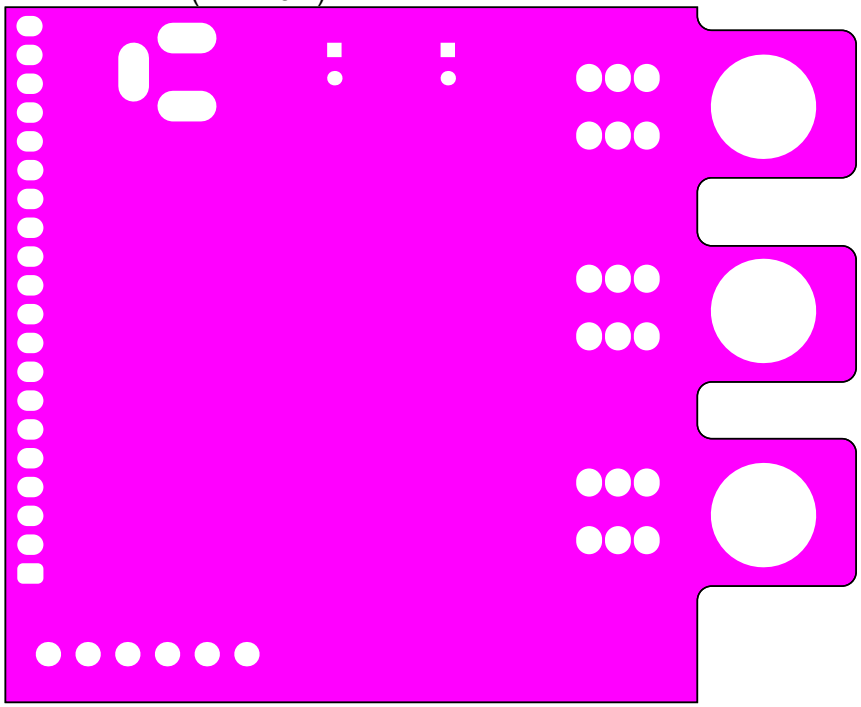

Realistic View

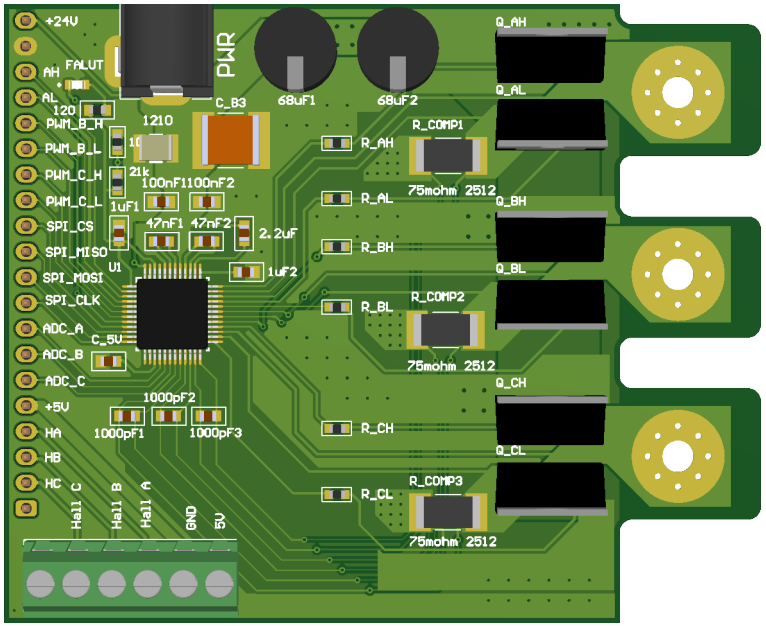

Realistic View

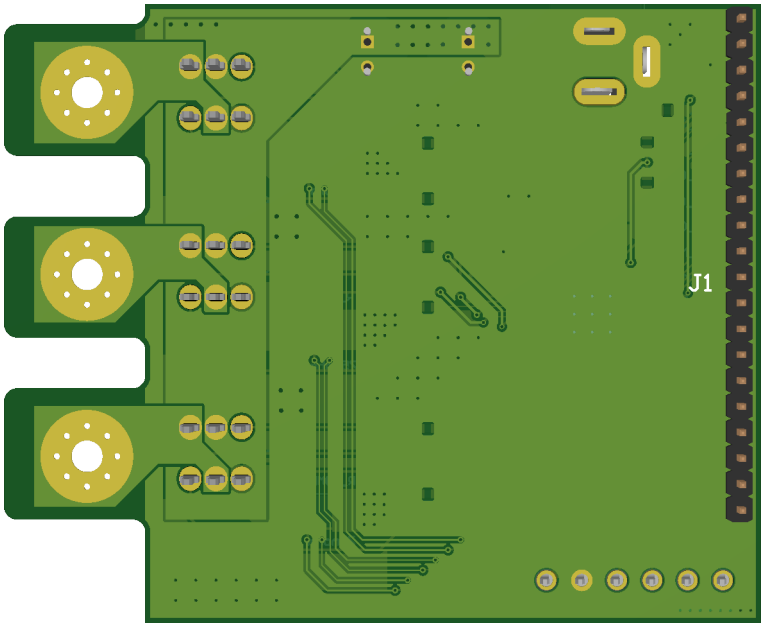

Drill Drawing View (Scale 2:1)

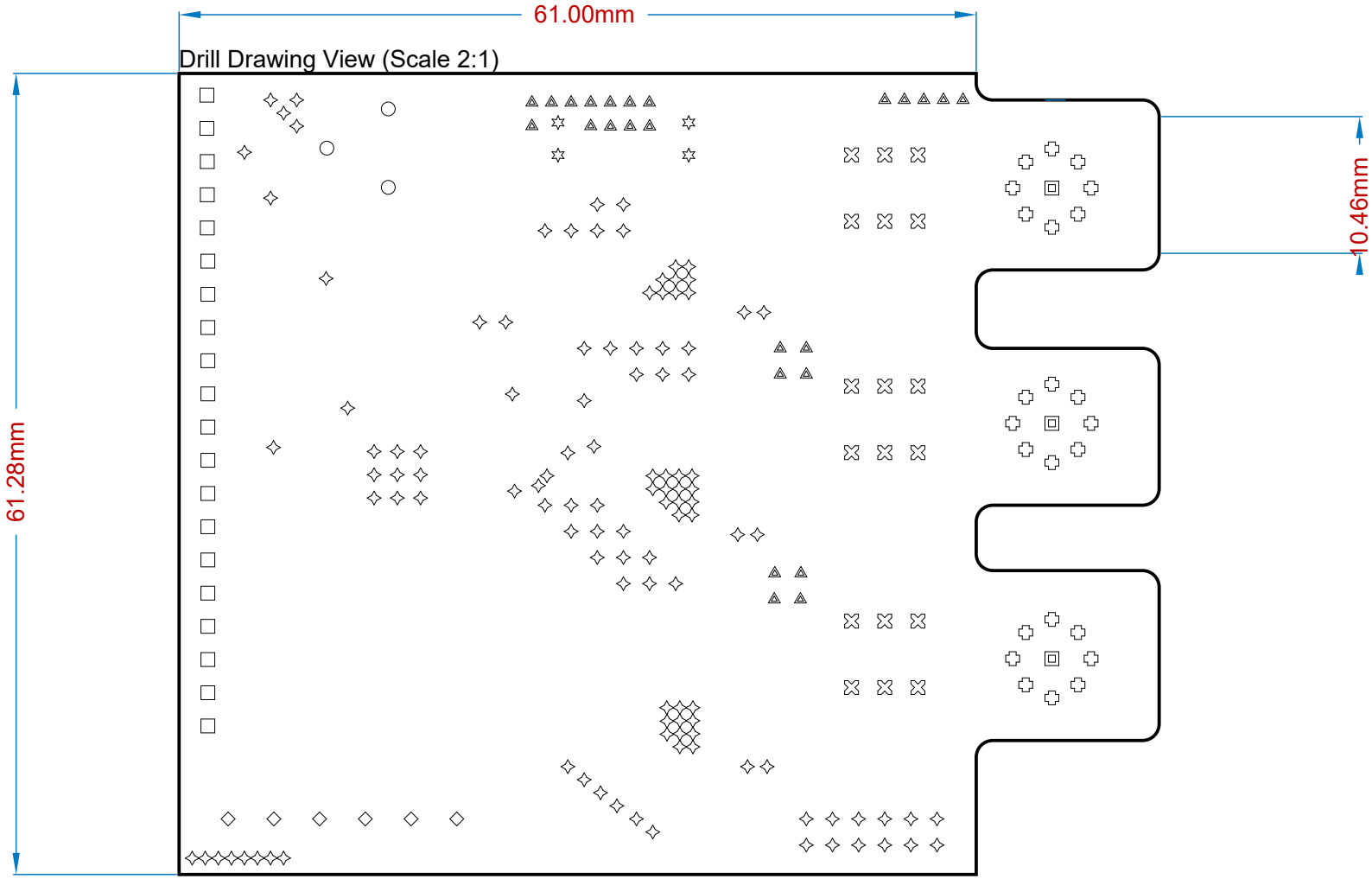

Drill Table

Symbol	Count	Hole Size	Plated	Hole Tolerance
✧	118	0.30500mm(12.00790mil)	Plated	
◬	25	0.45000mm(17.71650mil)	Plated	
✚	24	0.60000mm(23.62200mil)	Plated	
○	3	0.70000mm(27.55910mil)	Plated	
✡	4	0.76200mm(30.00000mil)	Plated	
⊠	18	0.80000mm(31.49610mil)	Plated	
□	20	1.10000mm(43.30710mil)	Plated	
◇	6	1.30000mm(51.18110mil)	Plated	
⧈	3	3.10000mm(122.04720mil)	Plated	
	221 Total			

Follow default stackup of JLCPCB/PCBWay 2-layer

Layer Stack Legend

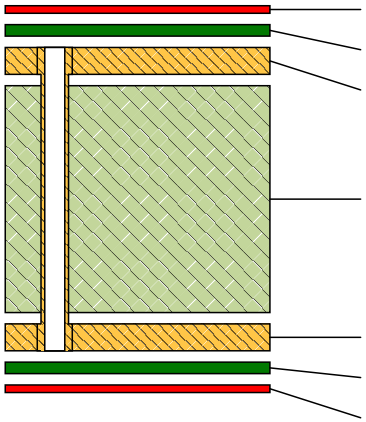

Material	Layer	Thickness	Dielectric Material	Type	Gerber
	Top Overlay			Legend	GTO
Surface Material	Top Solder	0.01520mm(0.59840mil)	Solder Resist	Solder Mask	GTS
Copper	**Top Layer**	**0.03556mm(1.40000mil)**		**Signal**	**GTL**
		1.09848mm(43.24720mil)	*FR-4*	*Dielectric*	
Copper	**Bottom Layer**	**0.03556mm(1.40000mil)**		**Signal**	**GBL**
Surface Material	Bottom Solder	0.01520mm(0.59840mil)	Solder Resist	Solder Mask	GBS
	Bottom Overlay			Legend	GBO

Total thickness: 1.20000mm(47.24400mil)