1. Suppose there are three cascaded amplifiers

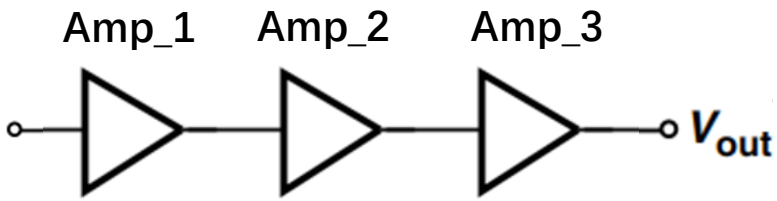

Amplifier	Voltage gain(dB)	IIP_3 (V_p)	Noise Figure(dB)	A_P(dB)
1	30	2	10	20
2	20	1	20	30
3	10	500m	30	40

a) Calculate the IIP_3 of the overall chain. (Neglect second order nonlinearities.)

b) Calculate the NF of the overall chain using Friis' equation.

$$\Rightarrow \frac{1}{A_{IP_3}^2} = \frac{1}{A_{IP_{3,1}}^2} + \frac{\alpha_1^2}{A_{IP_{3,2}}^2} + \frac{\alpha_1^2\beta_1^2}{A_{IP_{3,3}}^2} = \frac{1}{(2)^2} + \frac{1000}{(1)^2} + \frac{1000 \cdot 100}{(500m)^2} \qquad \Rightarrow A_{IP_3} = 1.5792mV_p$$

$$\Rightarrow NF_{total} = 1 + (NF_1 - 1) + \frac{NF_2 - 1}{A_{P1}} + \frac{NF_3 - 1}{A_{P1} \cdot A_{P2}} = 1 + (10 - 1) + \frac{100 - 1}{100} + \frac{1000 - 1}{100 \times 1000} = 10.99999 = 10.4139dB$$

2. **A GSM receiver, which is matched to the antenna, requires a minimum SNR of 21dB and has a channel bandwidth of 1MHz as well as an NF of 12dB, determine the sensitivity of the GSM receiver.**

$$P_{RS} = kT = -174dBm/Hz$$

$$P_{sen} = -174dBm/Hz + NF + 10\log B + SNR_{\min} = -81dBm$$

3. **Why do we need upconverter in transmitter and downconverter in receiver?**

1. Avoid interference 2. High frequencies correspond to small antenna area 3. medium frequency is more suitable for signal processing and makes it easier to make good filters

4. **Say a desired signal of $\boldsymbol{f_0}$=2.4GHz is received by a nonlinear amplifier, accompanied by two interferers at $\boldsymbol{f_1}$=2.6GHz and $\boldsymbol{f_2}$=2.8GHz. What will happen at the output of the amplifier?**

intermodulation product falling at $f_0 = 2f_1 - f_2$ will cause interference to the desired signal

1. Consider the sliding-IF receiver shown in Fig. 2.1.

(a) Determine the required LO frequency range. (assume the second IF is zero, and the input RF range is $[f_1, f_2]$)

(b) Determine the image frequency range.

(c) Is this architecture preferable to that in Fig. 2.2? Why?

(d) Determine some of the mixing spurs in the architecture of Fig. 2.1 (use f_{in} to express f_{int})

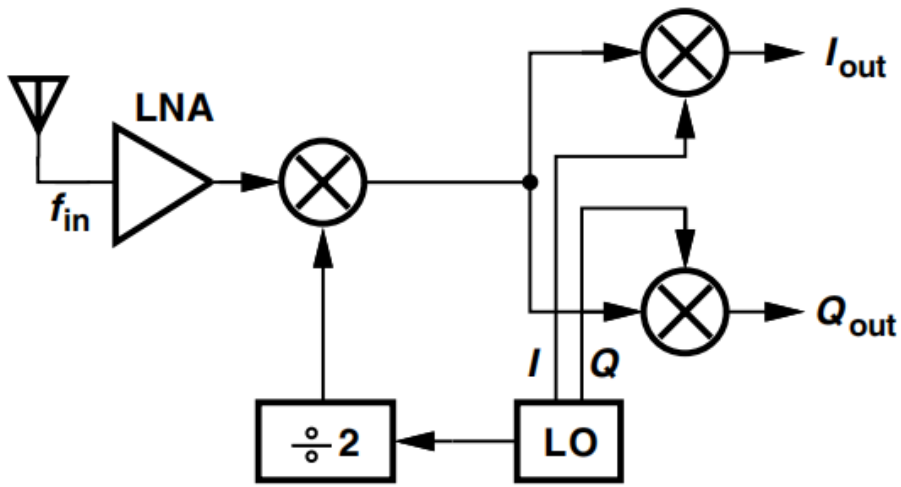

Fig. 2.1

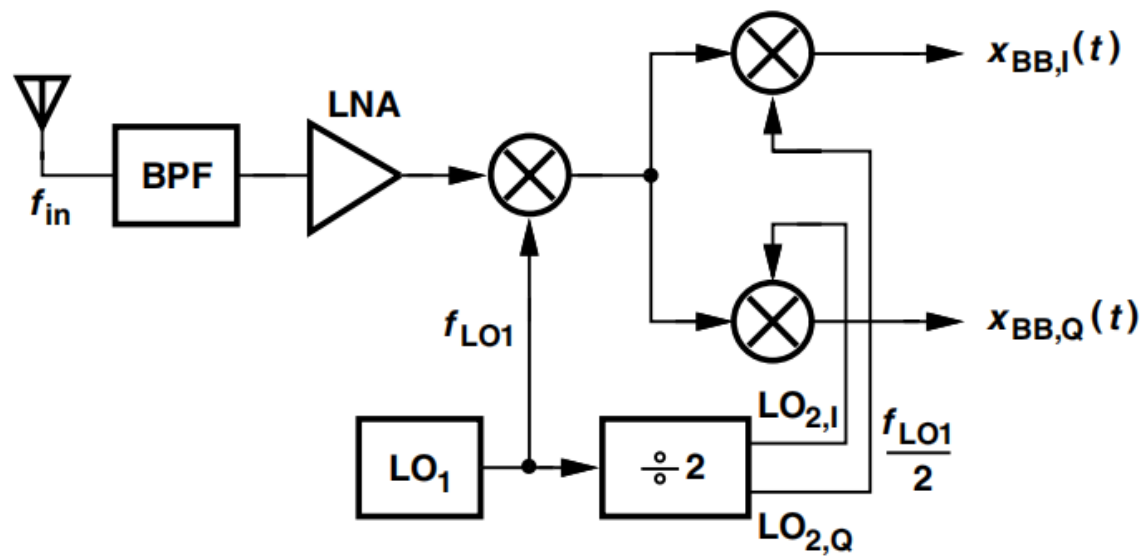

Fig. 2.2

a) Assume the second IF is zero

$$f_{in} - \frac{1}{2} f_{LO} - f_{LO} = 0$$

$$f_{LO} = \frac{2}{3} f_{in}$$

If the input RF range is $[f_1, f_2]$, the LO frequency range is $\left[\frac{2}{3} f_1, \frac{2}{3} f_2\right]$

b) As follows

$$2 \cdot \left(\frac{1}{2} f_{LO}\right) - f_{\mathrm{in}} = f_{image}$$

$$\mathrm{f_{image}} = -\frac{1}{3} \mathrm{f_{in}}$$

The range of image freq is $\left[-\frac{1}{3} f_2, -\frac{1}{3} f_1\right]$

c) No

Because the image frequency range is not filtered, which would interfere with subsequent signal processing. And the I/Q mixers operate at much higher frequency, which is difficult to design

d) Mixing spurs:

$$f_{int} = \pm m f_{LO1} \pm n f_{LO2} = \left(\pm \frac{m}{2} \pm n\right) \cdot \frac{2}{3} f_{in}$$

2. **A direct-conversion receiver incorporates a voltage gain of 50 dB from the LNA input to each mixer output and another gain of 60 dB in the baseband stages following the mixer. If the LO leakage at the LNA input is equal to -80 dBm, determine the offset voltage at the output of the mixer and at the output of the baseband chain.**

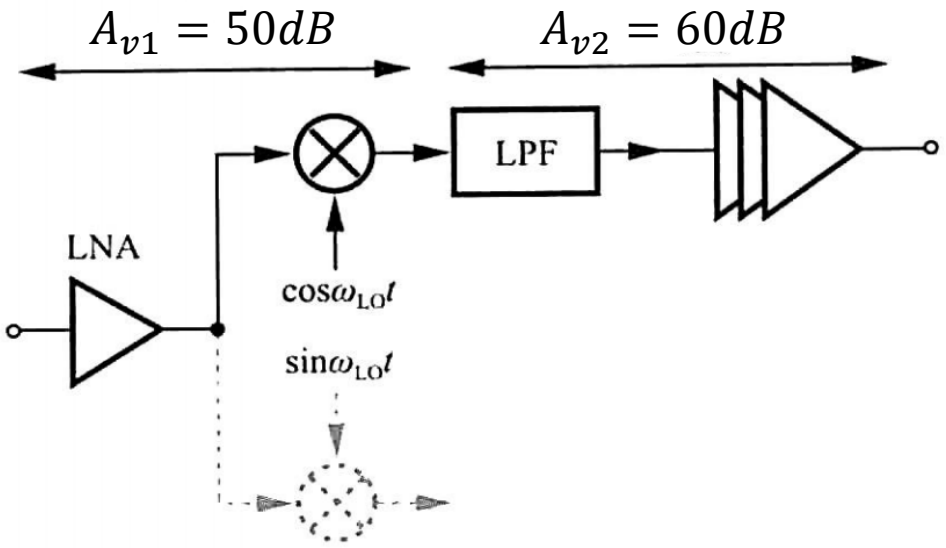

If a sinusoid $V_0 cos\omega_{in}t$ is applied to the LNA input, then the baseband signal at the mixer output, $V_{bb}\cos(\omega_{in} - \omega_{LO})\,t$, has an amplitude given by

$$V_{bb} = A_{v1} \cdot V_0$$

Thus, for an input $V_{leak} cos\omega_{LO}t$, the dc value at the mixer output is equal to

$$V_{dc} = A_{v1} \cdot V_{leak}$$

Since $A_{v1} = 316.23$ and $V_{leak} = 31.62\mu V$, we have $V_{dc} = 10mV$. Amplified by another 60dB, this offset reaches 10V at the baseband ouput.

3. Consider the Trade-off between Image Rejection and Channel Selection, and describe the advantages and disadvantages of high ω_{IF} and low ω_{IF}

Shown in Fig. 4.14 are two cases corresponding to high and low values of IF so as to illustrate the trade-off. A high IF [Fig. 4.14(a)] allows substantial rejection of the image whereas a low IF [Fig. 4.14(b)] helps with the suppression of in-band interferers. We thus say heterodyne receivers suffer from a trade-off between image rejection and channel selection.

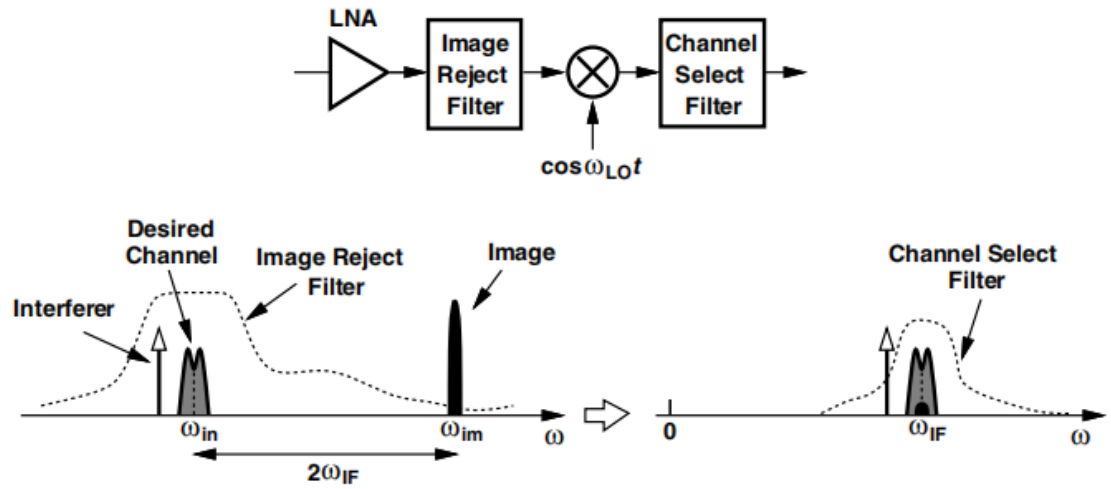

(a)

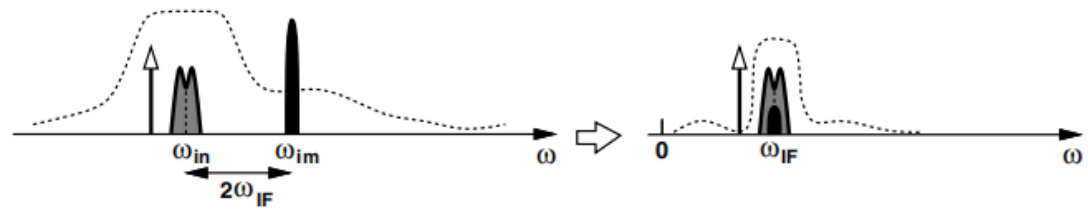

(b)

1. The figure below shows three variants of the Hartley architecture. Explain which one(s) can reject the image.

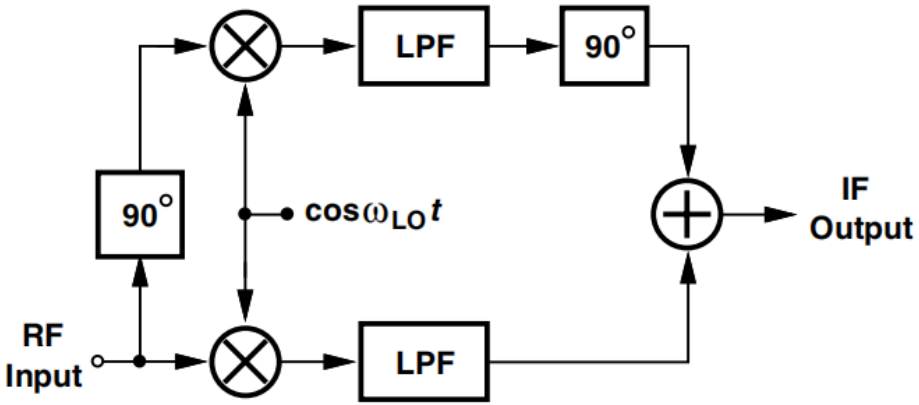

(a)

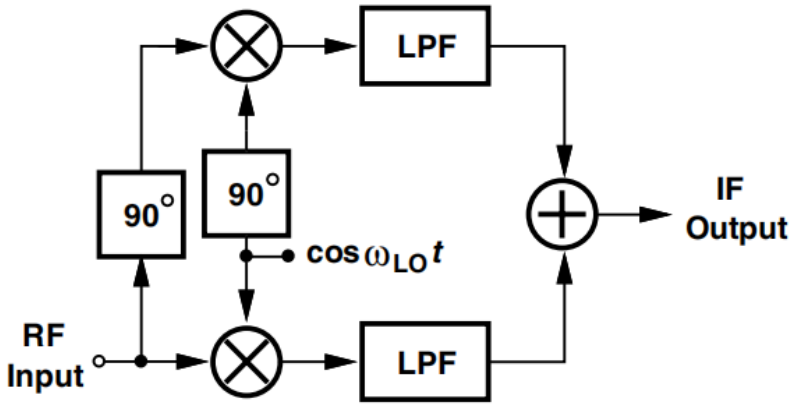

(b)

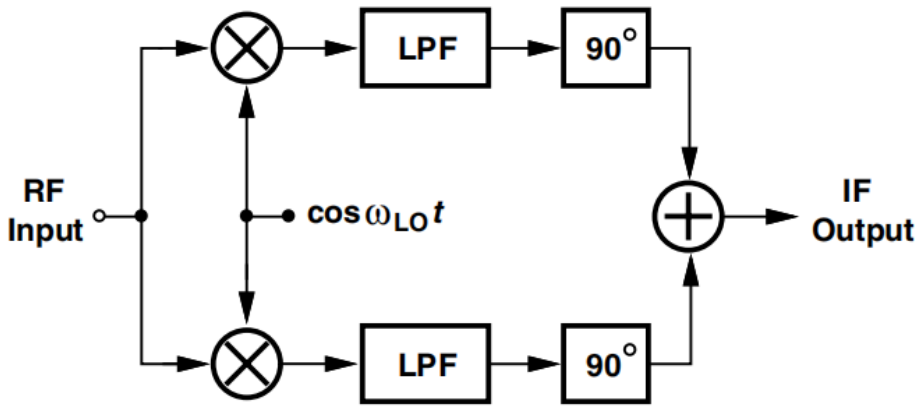

(c)

(a) Can

(b) Can not

(c) Can not

2. If $sin\omega_{LO}t$ and $cos\omega_{LO}t$ in the Hartley architecture are swapped, does the RX still reject the image?

(Perform the above analysis graphically using the spectra)

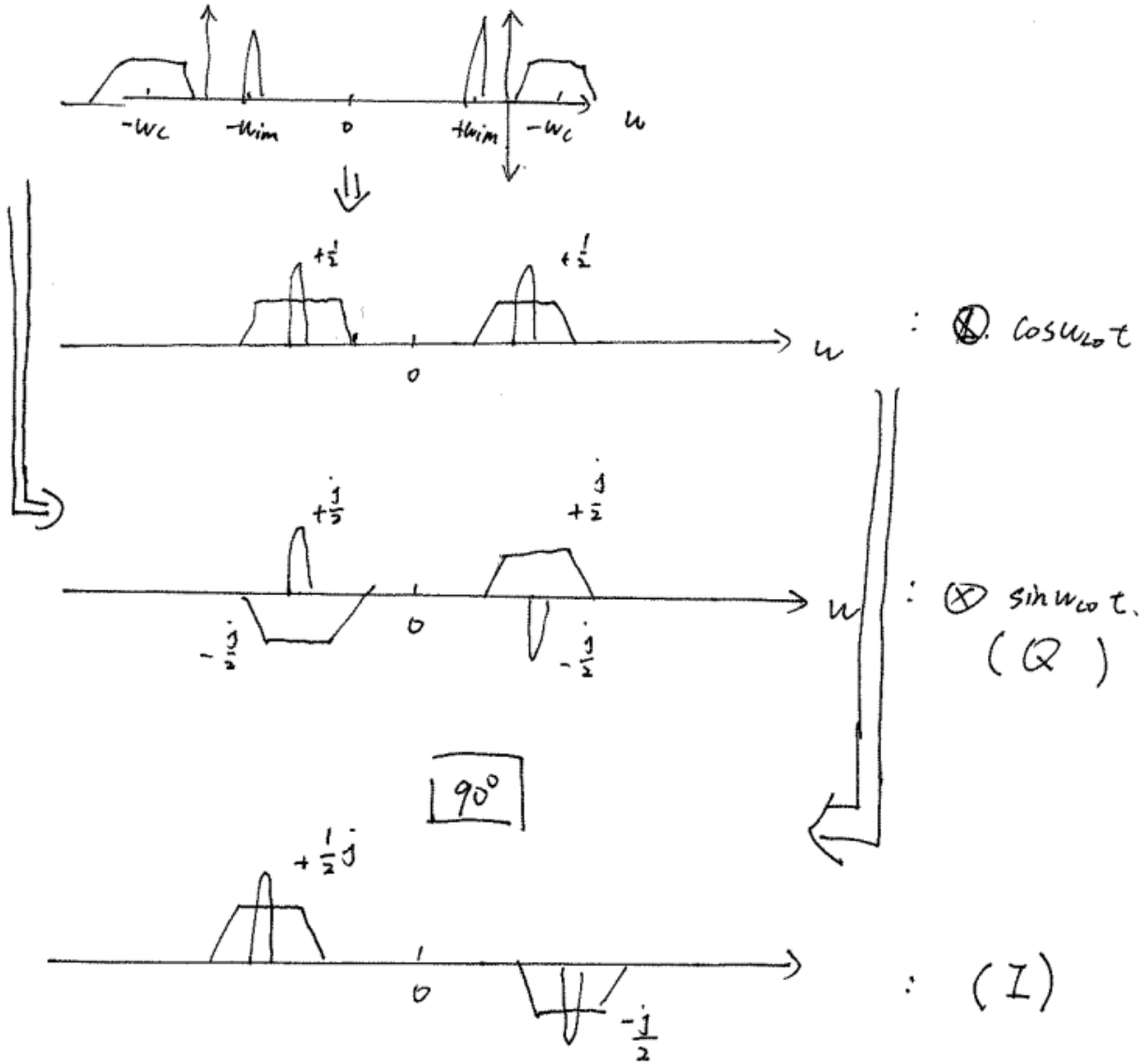

Yes, $sin\omega_{LO}t$ and $cos\omega_{LO}t$ can be swapped as long as I will be subtracted by Q.

3. In the Weaver architecture of Fig. 2.3, assume high-side injection for the first quadrature downconversion and low-side injection for the second quadrature downconversion. Figure out the results in E and F should be added or subtracted with the aid of signal spectra at nodes ABEF.

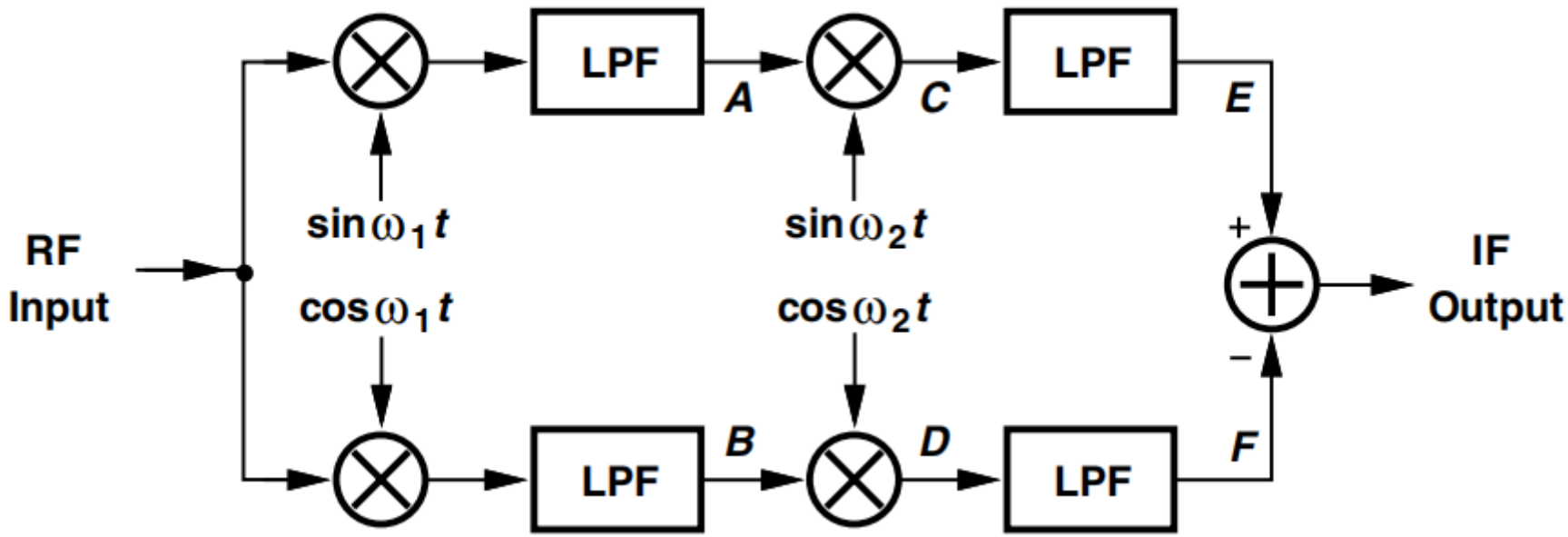

Fig.2.3

3. In the Weaver architecture of Fig. 2.3, assume high-side injection for the first quadrature downconversion and low-side injection for the second quadrature downconversion. Figure out the results in E and F should be added or subtracted with the aid of signal spectra at nodes ABEF.

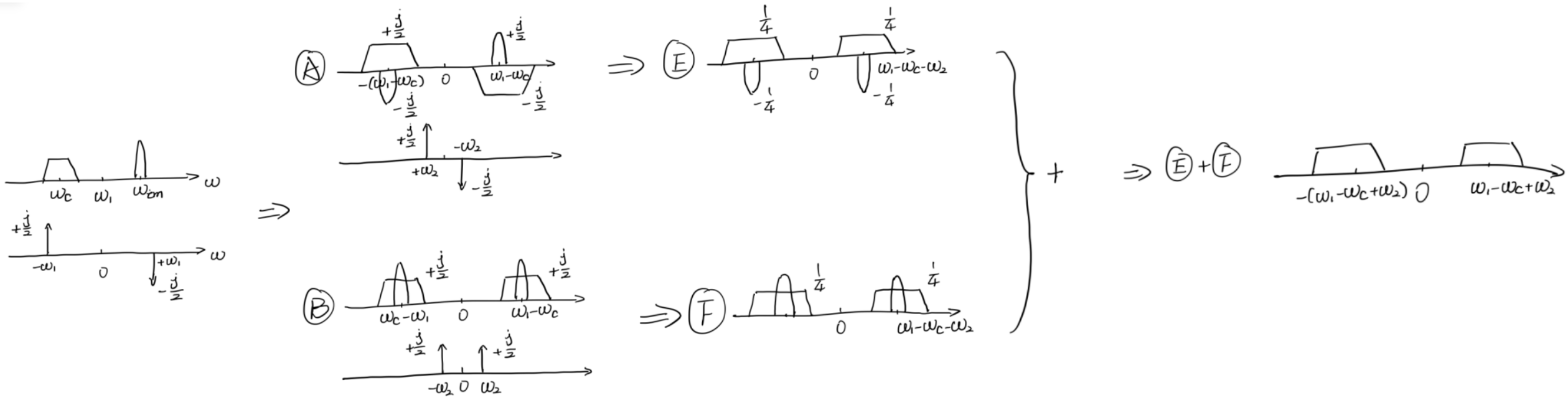

For the inductively-loaded CS stage of Fig. 4.2, determine V_{out}/V_{in} and find the voltage gain at the resonance frequency, $\omega_0 = 1/\sqrt{L_1(C_1 + C_F)}$, if $|jC_1\omega_0| \ll g_m$.

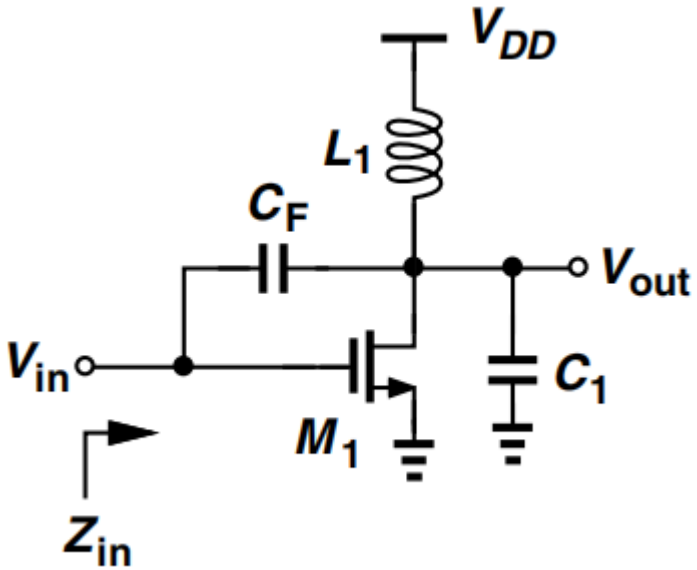

Fig. 4.2

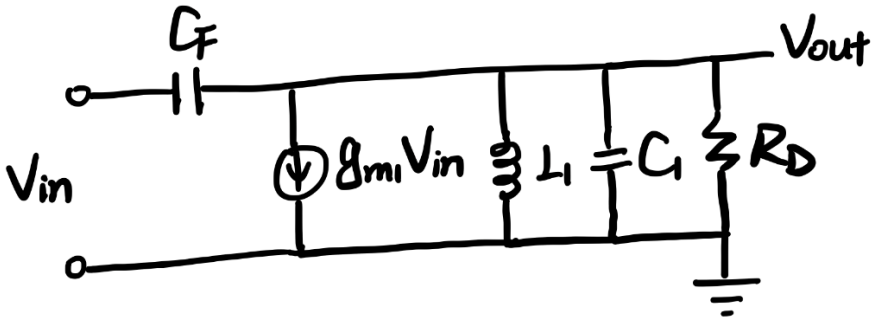

$$\frac{V_{in} - V_{out}}{\frac{1}{C_F s}} = g_{m1}V_{in} + \frac{V_{out}}{L_1 s} + \frac{V_{out}}{\frac{1}{C_1 s}} + \frac{V_{out}}{R_P}$$

$$\frac{V_{out}}{V_{in}} = \frac{C_F s - g_{m1}}{(C_1 + C_F)s + \frac{1}{L_1 s} + \frac{1}{R_P}}$$

(R_P is the model of loss on L_1)

At ω_0:

$$\frac{V_{out}}{V_{in}}(\omega_0) = \frac{j\omega_0 C_F - g_{m1}}{1/R_P} \approx -\frac{g_{m1}}{1/R_P}$$

For the complementary stage shown in Fig. 4.3, determine the closed-loop gain and noise figure if channel-length modulation is not neglected. Assume matching at the input.

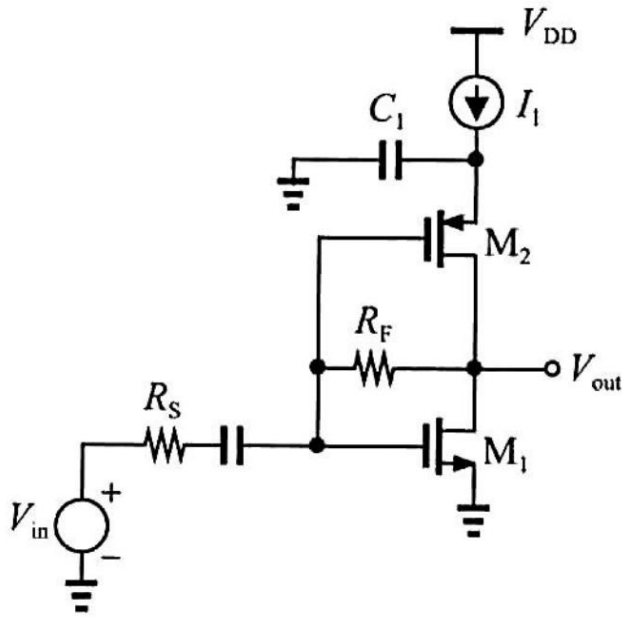

Fig. 4.3

$$I_x = (g_{m1} + g_{m2})V_x + \frac{V_x - I_x R_F}{r_o}$$

$$\Rightarrow \frac{V_x}{I_x} = R_{in} = \frac{r_o + R_F}{(g_{m1} + g_{m2})r_o + 1} = R_s$$

$$\frac{V_{out}}{V_x} = 1 - \frac{R_F}{R_s}$$

$$\Rightarrow \frac{V_{out}}{V_{in}} = \frac{1}{2}\left(1 - \frac{R_F}{R_s}\right)$$

Noise of R_F:

$$\overline{V_{n,RF}^2} = 4kTR_F\left(\frac{1 - (g_{m1} + g_{m2})R_F}{1 - (g_{m1} + g_{m2})R_F - \frac{R_F + R_s}{r_o}}\right)$$

Noise of M1, M2:

$$\overline{V_{n,M1\&M2}^2} = 4kT\gamma(g_{m1} + g_{m2}) \cdot \left(\frac{R_F + R_s}{\frac{R_F + R_s}{r_o} + R_F(g_{m1} + g_{m2}) + 1}\right)2$$

$$\Rightarrow NF = 1 + \frac{\overline{V_{n,RF}^2} + \overline{V_{n,M1\&M2}^2}}{\left[\frac{1}{2}\left(1 - \frac{R_F}{R_s}\right)\right]^2} \cdot \frac{1}{4kTR_s}$$

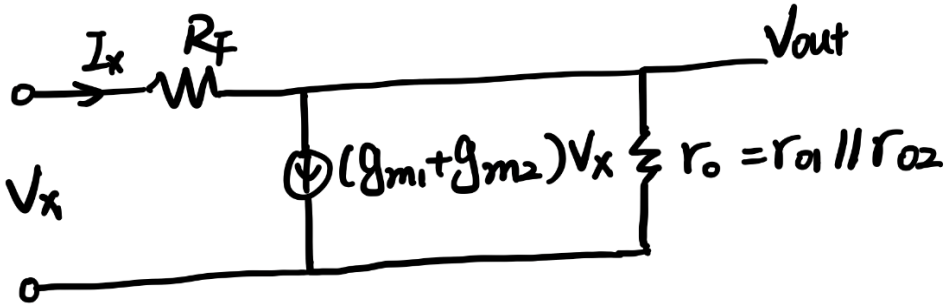

A circuit exhibits a noise figure of 3 dB. What percentage of the output noise power is due to the source resistance, R_S? Repeat the problem for NF=1 dB.

(1)

$$NF = 1 + \frac{\overline{V_{n,out}^2}}{A_v^2} \cdot \frac{1}{4kTR_s}, where\ \overline{V_{n,out}^2}\ is\ not\ due\ to\ R_s$$

$$\Rightarrow \mathrm{NF} = 1 + \frac{\overline{V_{n,in}^2}}{4kTR_s} = 3dB \Rightarrow \overline{V_{n,in}^2} = 4kTR_s \Rightarrow 50\%$$

(2)

$$NF = 1dB = 1.26$$

$$\Rightarrow \overline{V_{n,in}^2} = 0.26 \times 4kTR_s \Rightarrow 1 - \frac{0.26}{1.26} = 79.37\%$$

Determine the noise figure of the CG circuits shown in Fig. 4.4.

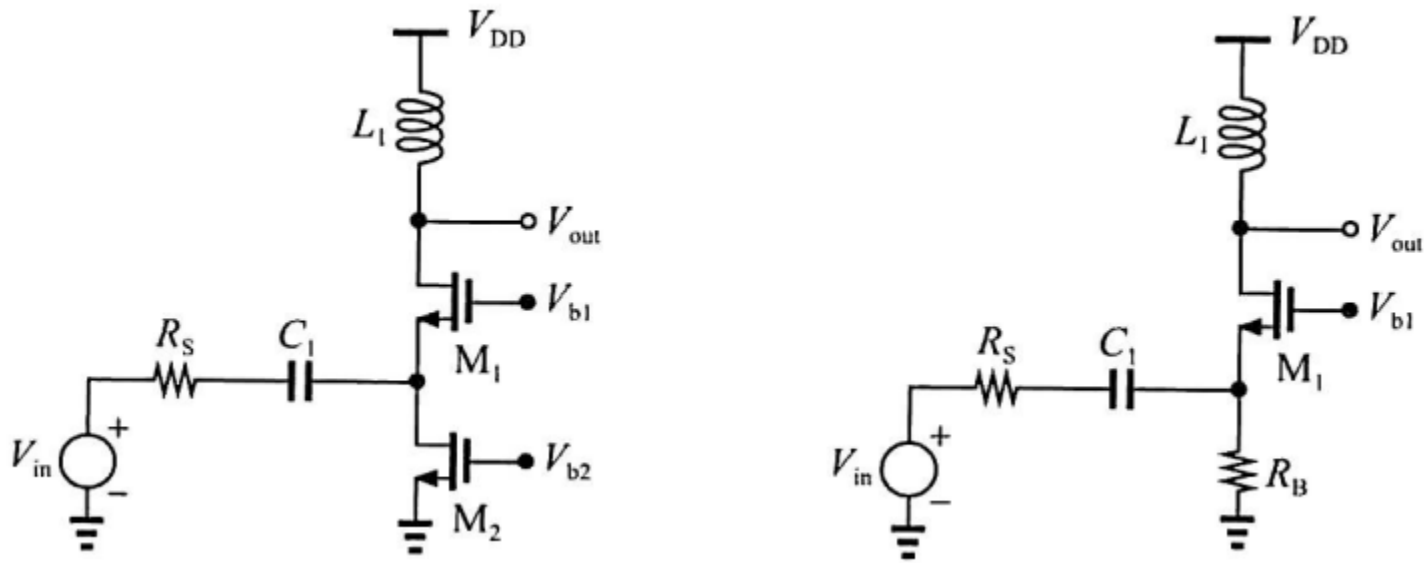

(a) (b)

Fig. 4.4

(a)

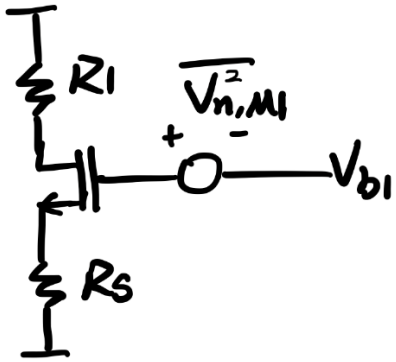

$$\overline{V_{n,out\ M1}^2} = \frac{4kT\gamma}{g_m}\left(\frac{R_1}{R_s + \frac{1}{g_{m1}}}\right)^2 = kT\gamma\frac{R_1^2}{R_s}$$

$$\overline{V_{n,out\ M2}^2} = 4kT\gamma g_{m2}R_1^2$$

$$\overline{V_{n,out\ R1}^2} = 4kTR_1$$

if input is matched, $\frac{V_{out}}{V_{in}} = \frac{R_1}{2R_s}$

$$NF = 1 + \frac{\gamma}{g_{m1}R_s} + 4\frac{R_s}{R_1} + 4R_s \cdot g_{m2}$$

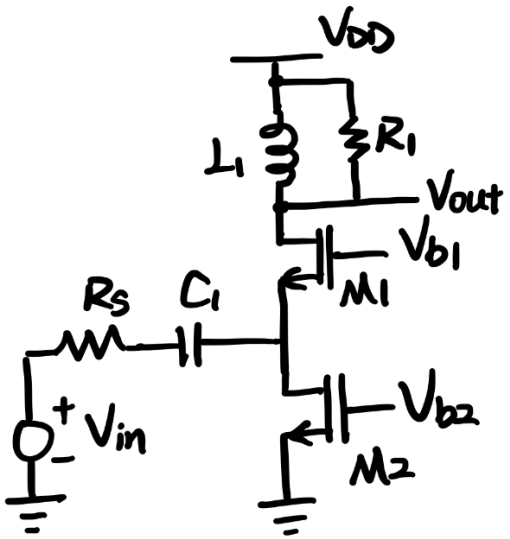

(b)

If M2 is replaced by R_B

$$\overline{V_{n,out\ R_B}^2} = \frac{4kT}{R_B}R_1^2$$

$$NF = 1 + \frac{\gamma}{g_{m1}R_s} + 4\frac{R_s}{R_1} + 4\frac{R_s}{R_B}$$

1. Suppose in Fig. 5.1, the LNA has a voltage gain of A_0 and the mixers have a high input impedance and a voltage gain of unity. If the I and Q outputs are simply added, determine the overall noise figure in terms of the NF of the LNA and the input-referred noise voltage of the mixers.

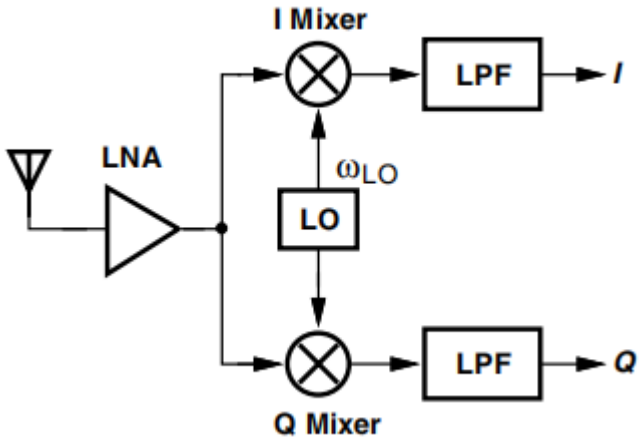

Fig. 5.1

The NF of the LNA:

$$NF_1 = 1 + \frac{\overline{V_{n,out,LNA}^2}}{A_0^2} \cdot \frac{1}{4kTR_s}$$

$$\Rightarrow \overline{V_{n,out,LNA}^2} = (NF_1 - 1) \cdot A_0^2 \cdot 4kTR_s$$

$$\overline{V_{n,out}^2} = \overline{V_{n,out,LNA}^2} + 1 \cdot \overline{V_{n,in,\,I\,mixer}^2} \cdot 2$$

$$\Rightarrow NF_{total} = 1 + \frac{(NF_1 - 1)A_0^2 \cdot 4kTR_s + 2 \cdot \overline{V_{n,in,\,I\,mixer}^2}}{A_0^2} \cdot \frac{1}{4kTR_s}$$

2. Consider the circuit of Fig. 5.2, where C1 and C2 are identical and represent the gate-source capacitances in Fig. 5.3. Assume $V_1 = -V_2 = V_0 cos\omega_{LO}t$.

   a) If $C_1 = C_2 = C_0(1 + \alpha_1 V)$, where V denotes the voltage across each capacitor, determine the LO feedthrough component(s) in V_{out}. Assume $\alpha_1 V \ll 1$.

   b) Repeat part (a) if $C_1 = C_2 = C_0\left(1 + \alpha_1 V + \alpha_2 V^2\right)$.

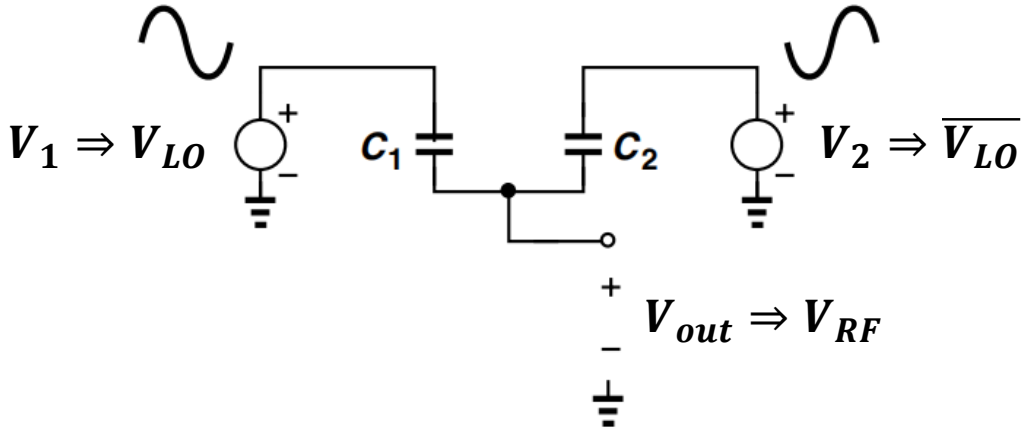

Fig. 5.2

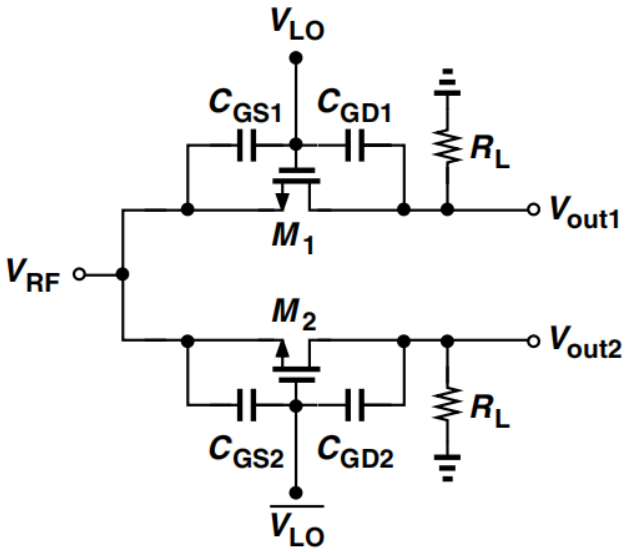

Fig. 5.3

2. Consider the circuit of Fig. 5.2, where C1 and C2 are identical and represent the gate-source capacitances in Fig. 5.3. Assume $V_1 = -V_2 = V_0 cos\omega_{LO}t$.

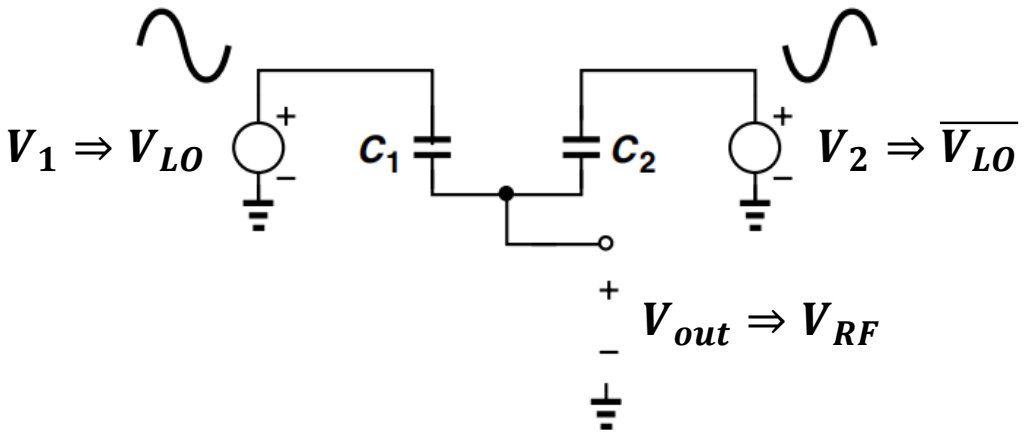

Fig. 5.2

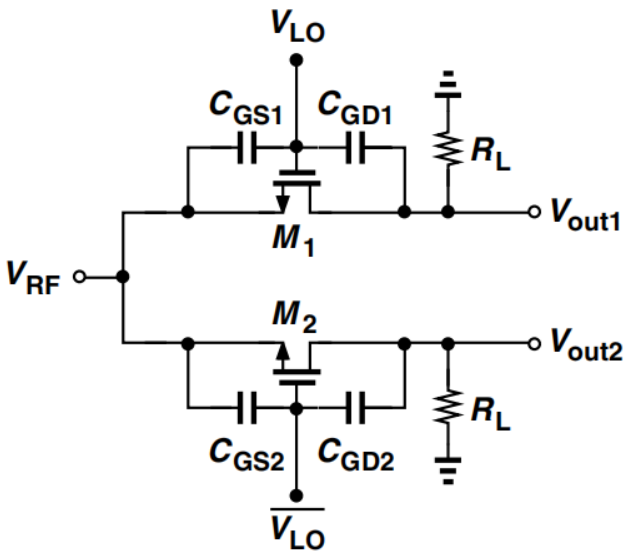

Fig. 5.3

(a)

$$V_{out} = V_1 \cdot \frac{C_1}{C_1 + C_2} + V_2 \cdot \frac{C_2}{C_1 + C_2} = V_0 cos\omega_{LO}t \cdot \frac{C_1 - C_2}{C_1 + C_2} = 0$$

for single-balanced mixer, the LO-RF feedthrough at ω_{LO} vanishes if the circuit is symmetric

(b)

the result is the same as (a) because of symmetry

1. In the active mixer of Fig. 6.1, $I_{n,M1}$ contains all frequency components. Prove that the convolution of these components with the harmonics of the LO in essence multiplies $4kT\gamma/g_m$ by a factor of $\pi^2/4$.

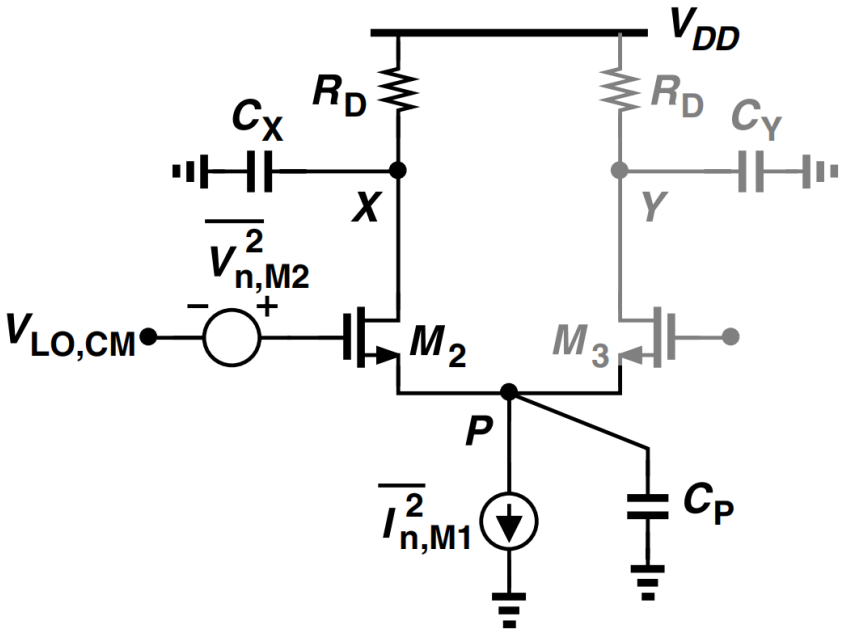

Fig. 6.1

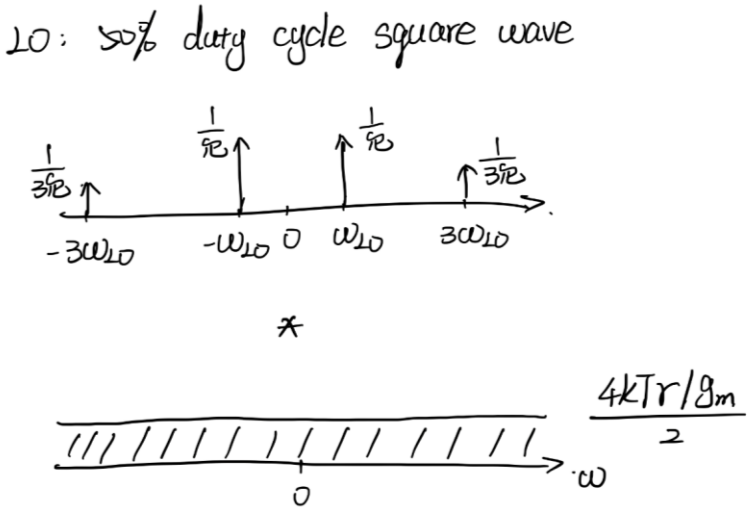

$$\frac{4kT\gamma/g_m}{2}\cdot\left[\frac{1}{\pi^2}+\frac{1}{(3\pi)^2}+\frac{1}{(5\pi)^2}+\cdots\right]=\frac{4kT\gamma}{g_m}\cdot\frac{1}{\pi^2}\cdot\frac{\pi^2}{16}$$

As there are two sides on the spectrum and two sides in the mixer

$$\Rightarrow 4kT\gamma/g_m\cdot\frac{1}{\pi^2}\cdot\frac{\pi^2}{4}$$

2. Shown in Fig. 6.2 is the front end of a 1.8-GHz receiver. The LO frequency is chosen to be 900 MHz and the load inductors and capacitances resonate with a quality factor of Q at the IF. Assume M_1 is biased at a current of I_1, and the mixer and the LO are perfectly symmetric.

   a) Assuming M_2 and M_3 switch abruptly and completely, compute the LO-IF feedthrough, i.e., the measured level of the 900-MHz output component in the absence of an RF signal.

   b) Explain why the flicker noise of M_1 is critical here.

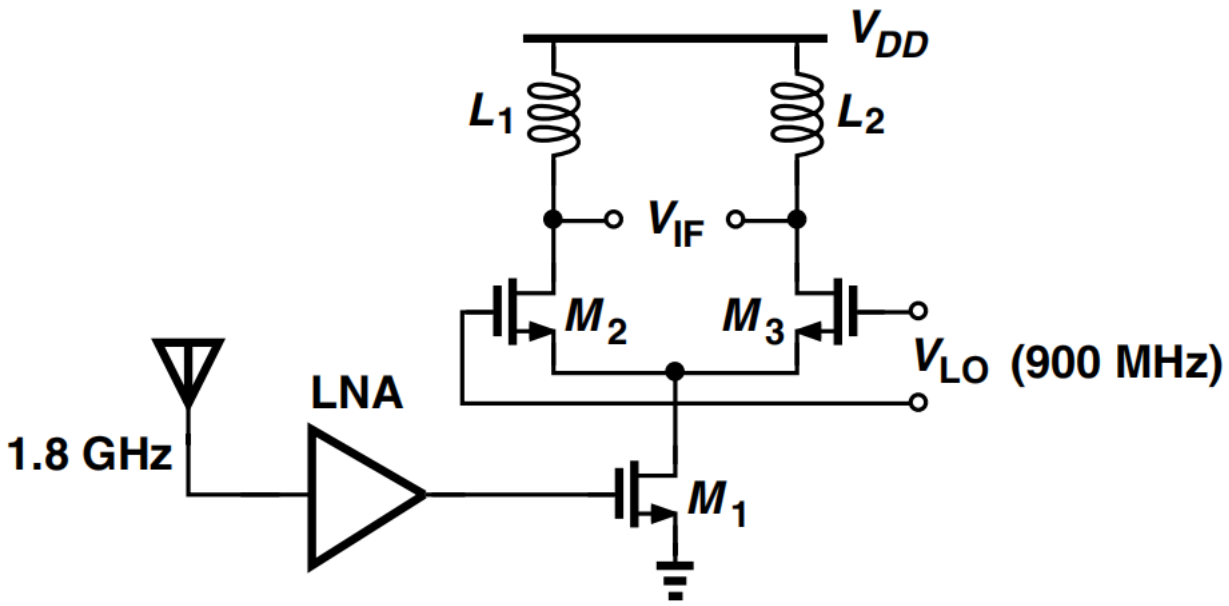

Fig. 6.2

2. Shown in Fig. 6.2 is the front end of a 1.8-GHz receiver. The LO frequency is chosen to be 900 MHz and the load inductors and capacitances resonate with a quality factor of Q at the IF. Assume M_1 is biased at a current of I_1, and the mixer and the LO are perfectly symmetric.

   a) Assuming M_2 and M_3 switch abruptly and completely, compute the LO-IF feedthrough, i.e., the measured level of the 900-MHz output component in the absence of an RF signal.

   b) Explain why the flicker noise of M_1 is critical here.

a)

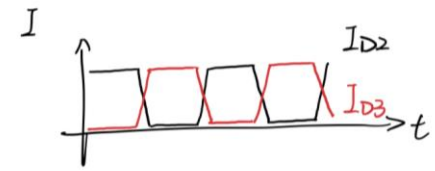

$$V_{IF} = (V_{DD} - I_{D3} \cdot R_P) - (V_{DD} - I_{D2} \cdot R_P) = (I_{D2} - I_{D3}) \cdot R_P .$$

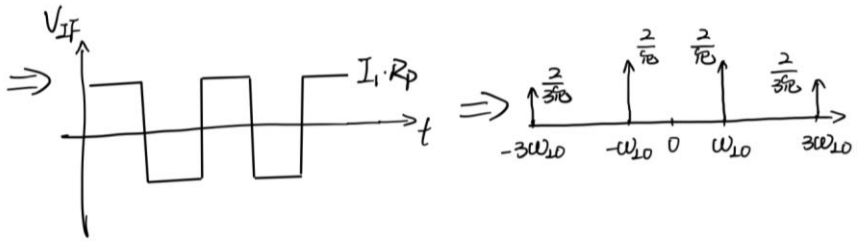

$\therefore$ LO-IF feedthrough

$$= I_1 \cdot R_P \cdot \frac{4}{\pi} = I_1 \omega_0 L_1 Q \cdot \frac{4}{\pi}$$

b)

$\because$ flicker noise of M_1 :

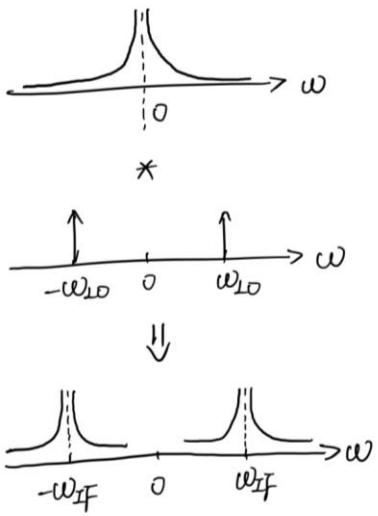

So the flicker noise is transferred to IF band

1. Prove that the Q of the circuit shown in Fig. 7. 1 is given by Eq. (7.1).

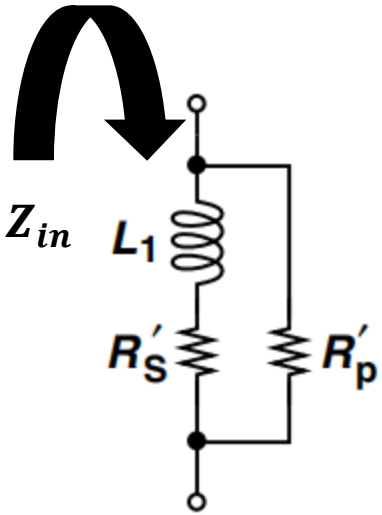

Fig. 7.1

$$Q = \frac{L_1 \omega R_p'}{L_1^2 \omega^2 + R_S'(R_S' + R_p')}.$$

Eq. (7.1)

$$Z_{in}(s) = (sL_1 + R_s') \parallel R_p' = \frac{sL_1 R_p' + R_s' R_p'}{sL_1 + R_s' + R_p'}$$

$$Z_{in}(j\omega) = \frac{R_s' R_p' + j\omega L_1 R_p'}{R_s' + R_p' + j\omega L_1} = \frac{(R_s' R_p' + j\omega L_1 R_p')(R_s' + R_p' - j\omega L_1)}{\left(R_s' + R_p'\right)^2 - \omega^2 L_1^2}$$

$$Q \triangleq \frac{Im(Z_{in})}{Re(Z_{in})} = \frac{\omega L_1 R_p'\left(R_s' + R_p'\right) - \omega L_1\left(R_s' R_p'\right)}{(R_s')^2 R_p' + \left(R_p'\right)^2 R_s' + \omega^2 L_1^2 R_p'} = \frac{L_1 \omega R_p'}{L_1^2 \omega^2 + R_s'(R_s' + R_p')}$$

2. Repeat Example 7.19 for four turns.

Example 7.19

Estimate the equivalent lumped interwinding capacitance of the three-turn spiral shown in Fig. 7.39(a).

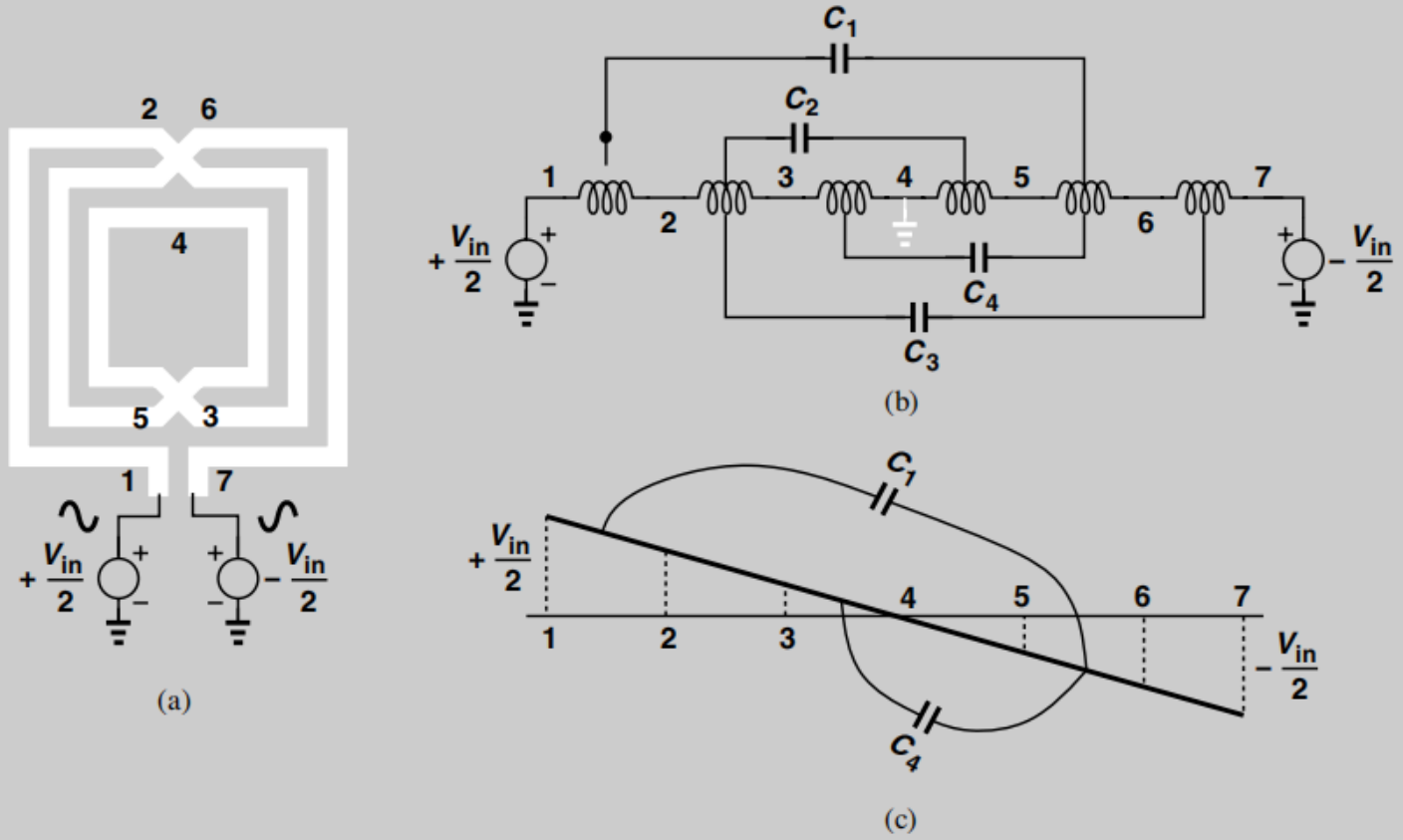

Figure 7.39 *(a) Three-turn symmetric inductor, (b) equivalent circuit, (c) voltage profile along the ladder.*

$\frac{V_{in}}{2} - \frac{V_{in}}{2}$

Solu:

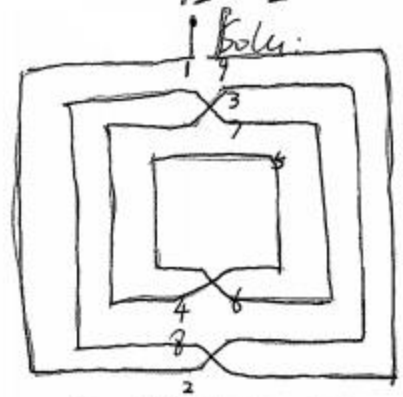

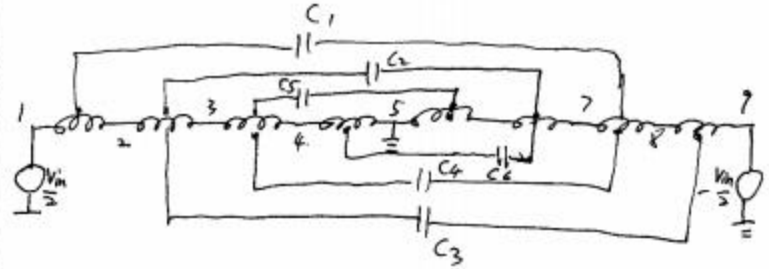

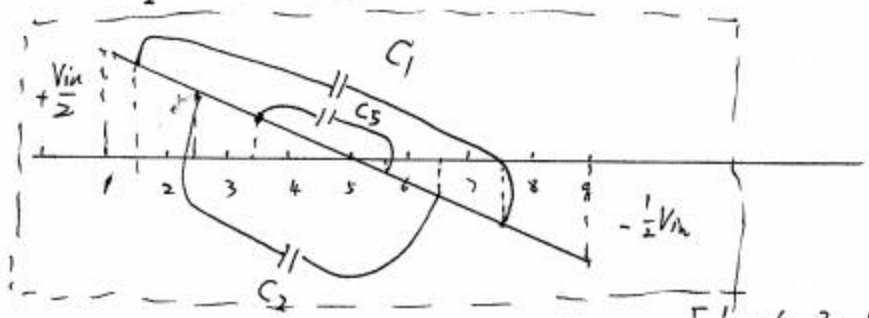

C_1 & C_3 Sustains $\frac{6}{8} V_{in}$

C_2 & C_4 Sustain $\frac{4}{8} V_{in}$

C_5 & C_6 sustain $\frac{2}{8} V_{in}$

$\Rightarrow$

$$E_{tot} = 2 \cdot \left[\frac{1}{2} C \left(\frac{6}{8} V_{in}\right)^2 + \frac{1}{2} C \cdot \left(\frac{4}{8} V_{in}\right)^2 + \frac{1}{2} C \left(\frac{2}{8} V_{in}\right)^2 \right]$$

$$= \frac{7}{8} \cdot C \cdot V_{in}^2$$

$\because C_1 + C_2 + \cdots + C_6 = C_{tot} \Rightarrow C = \frac{C_{tot}}{6}$

$$\therefore E_{tot} = \frac{7}{8} \cdot \frac{C_{tot}}{6} \cdot V_{in}^2$$

$$\Rightarrow \boxed{C_{eq} = \frac{7}{24} C_{tot}.}$$

1. Suppose H(s) in Fig. 8.1 satisfies the following conditions at a frequency $\boldsymbol{\omega_1}$: $|\boldsymbol{H(j\omega_1)}| = \mathbf{1}$ but $\angle \boldsymbol{H(j\omega_1)} = \mathbf{170°}$. Explain what happens. And Repeat the above problem if $|\boldsymbol{H(j\omega_1)}| < \mathbf{1}$ but $\angle \boldsymbol{H(j\omega_1)} = \mathbf{180°}$

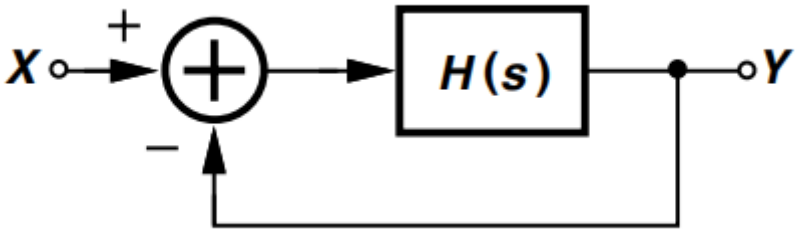

Fig. 8.1 Negative feedback system.

$|H(j\omega_1)| = 1$, $\angle H(j\omega_1) = 170°$, $\frac{Y}{X}(s) = \frac{H(s)}{1+H(s)}$

$$\left|\frac{Y}{X}(j\omega_1)\right| = \frac{1}{|1 + e^{+j\frac{170}{180}\pi}|} = \frac{1}{0.174} = 5.73$$

$$\angle\frac{Y}{X}(j\omega_1) = \frac{170}{180}\pi - \angle\big(1 + H(j\omega_1)\big) = \frac{17}{18}\pi - 1.4835 = 1.4835 \Rightarrow 85°$$

So if X(t) is a sinusoidal signal at ω_1, the amplitude of output will be multiplied by 5.73, and the phase will change by $85°$

$|H(j\omega_1)| = A < 1$, $\angle H(j\omega_1) = 180°$, $\therefore H(j\omega_1) = Ae^{j\pi} = -A$

$$\left|\frac{Y}{X}(j\omega_1)\right| = \frac{A}{1-A}$$

$$\angle\frac{Y}{X}(j\omega_1) = \pi - 0 = \pi$$

So if the input of the system is a sinusoidal signal at ω_1, the amplitude of output will be multiplied by $\frac{A}{1-A}$ and the phase of output will change by π, compared with input.

2. Is it true that the cross-coupled oscillator of Fig. 8.2 exhibits no supply sensitivity if the tail current source is ideal ?

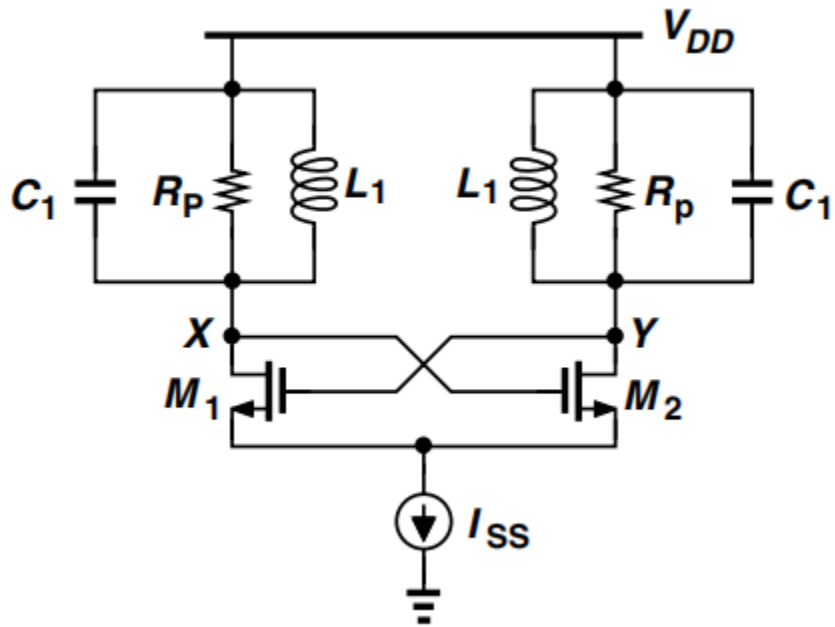

Fig. 8.2

Solution:

No, it is not. The drain-substrate capacitance of each transistor sustains an average voltage equal to V_{DD} (Fig. 8.20). Thus, supply variations modulate this capacitance and hence the oscillation frequency.

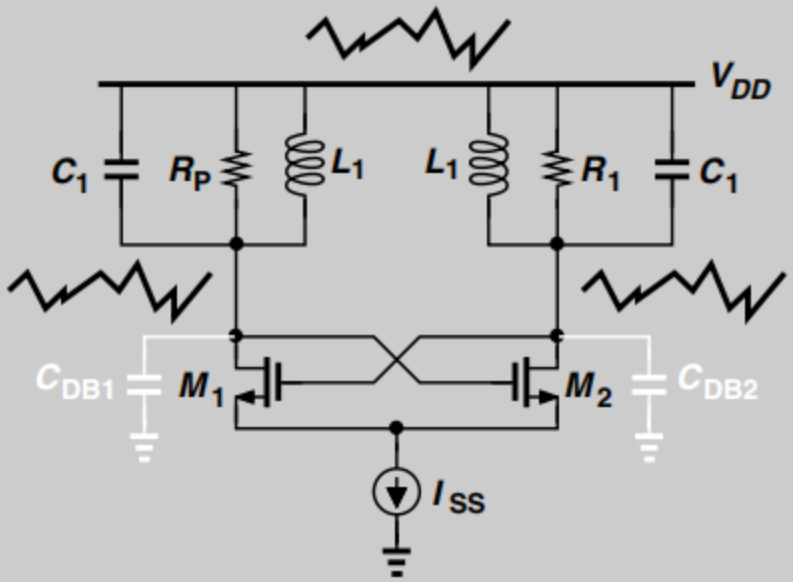

Figure 8.20 *Modulation of drain junction capacitances by V_{DD}.*

1. **Try to describe the basic principle of the PFD in Fig. 9.1. Analyze its advantage over a XOR gate.**

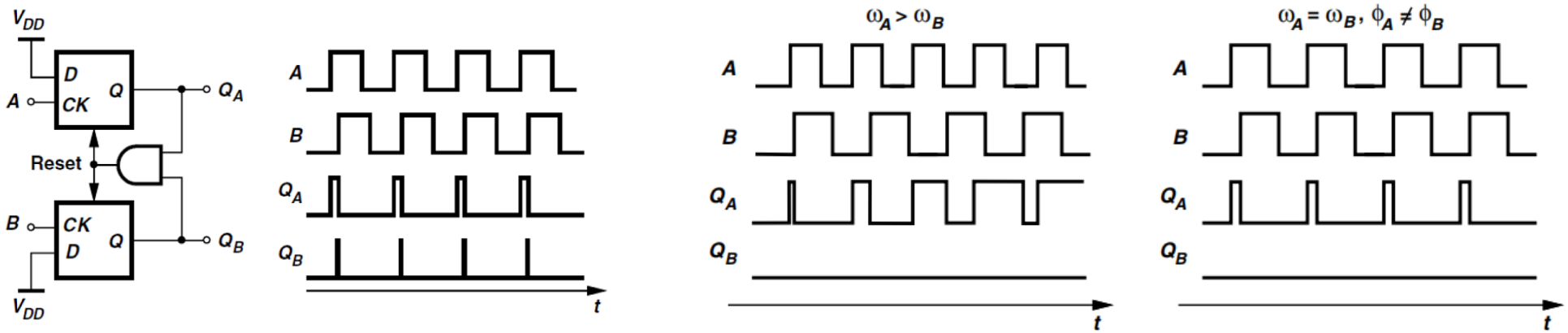

Fig. 9.1

- (1) a rising edge on A yields a rising edge on QA (if QA is low), and (2) a rising edge on B resets QA (if QA is high). The circuit is symmetric with respect to A and B (and QA and QB). We observe from Fig. 9.1 that, if ωA > ωB, then QA produces pulses while QB remains at zero. Conversely, if ωB > ωA, then positive pulses appear at QB and QA=0. On the other hand, as depicted in the figure on the right, if ωA=ωB, the circuit generates pulses at either QA or QB with a width equal to the phase difference between A and B. Thus, the average value of QA-QB represents the frequency or phase difference.
- Signals A and B act as clock inputs of DFFA and DFFB, respectively, and the AND gate resets the flipflops if QA=QB=1. We note that a transition on A forces QA to be equal to D input, i.e., a logical ONE. Subsequent transitions on A have no effect. When B goes high, so does QB, activating the reset of the flipflops. Thus, QA and QB are simultaneously high for a duration given by the total delay through the AND gate and the reset path of the flipflops
- XOR Gate can only detect phase difference, whereas the PFD in Fig. 9.1 can detect frequency difference as well as phase difference.

2. **For the PLL shown in Fig. 9.2. If ω_{in} is a FSK signal with a data rate of 1MHz and a carrier frequency of 10MHz, while the loop bandwidth of PLL is 100KHz. What will happen?**

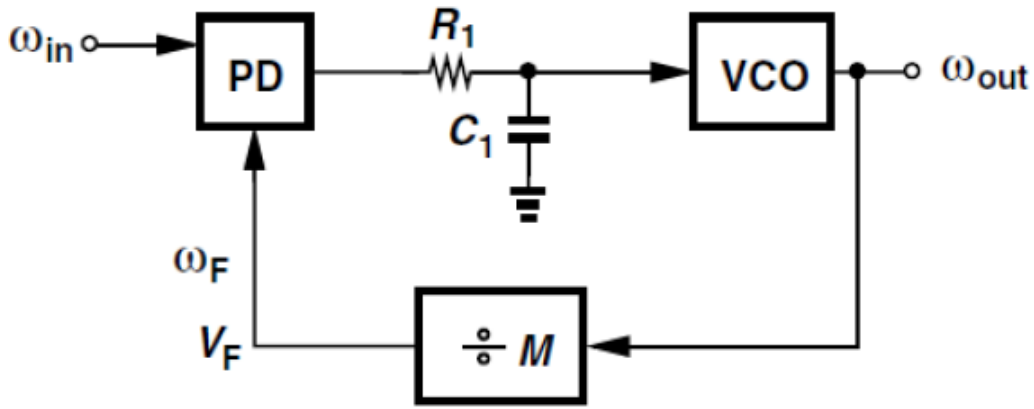

Fig. 9.2

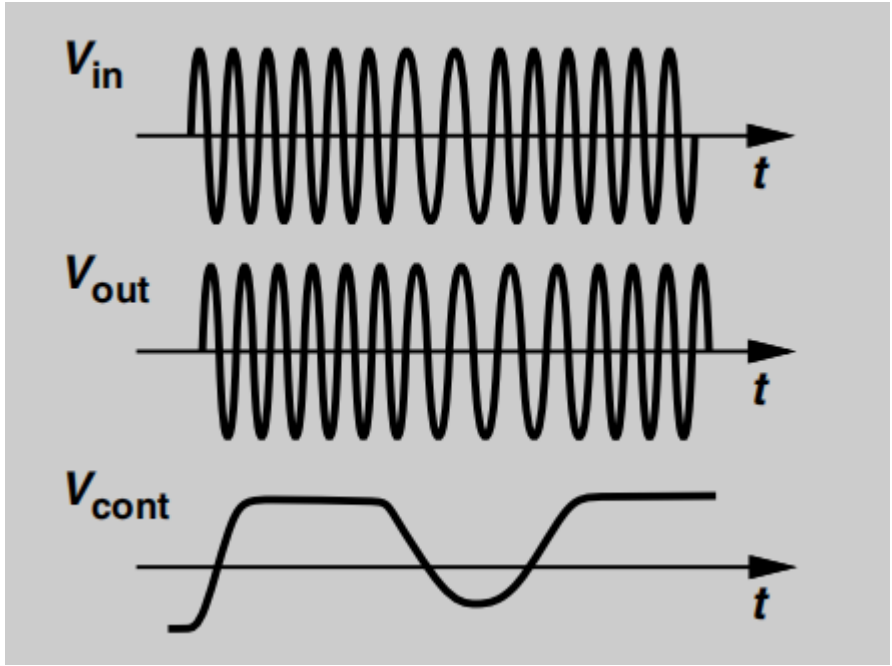

- If the data rate of $\boldsymbol{\omega_{in}}$ is larger than the loop bandwidth of PLL, then the input voltage node of VCO can not follow the changing speed of the data, which would result in the distortion of demodulated FSK signal as shown in the figure on the right.

3. **For the charge pump PLL shown in Fig. 9.3, explain why the gain of PFD and charge pump is infinite. And how about the dead zone?**

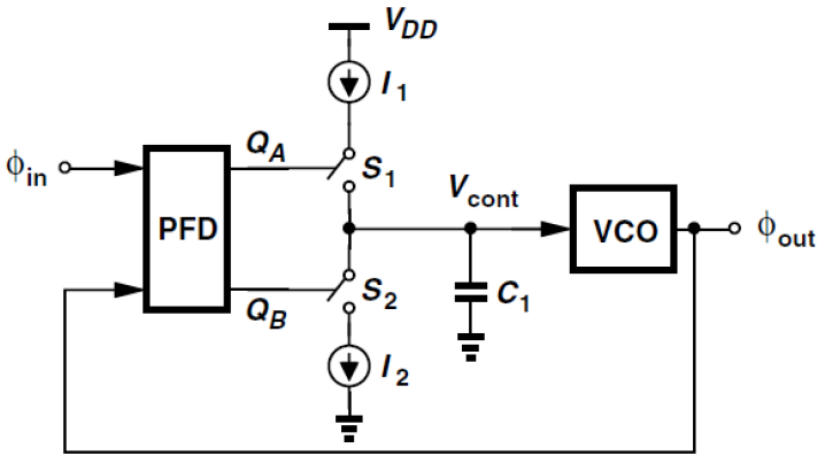

Fig. 9.3

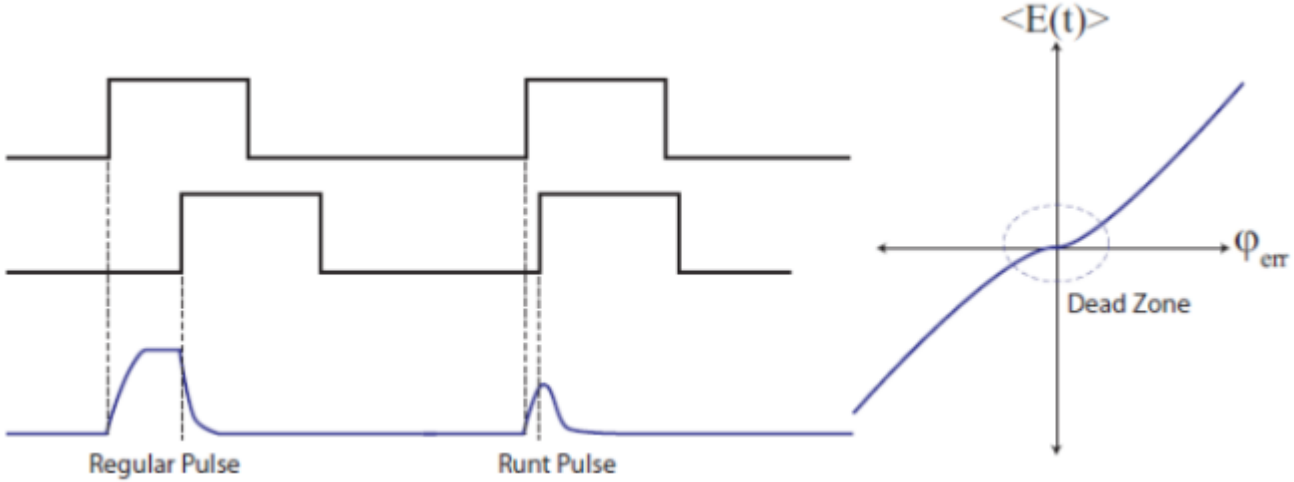

- Because even if the phase difference between A and B is very small, they can continue to open S1 and S2 with A certain time difference, charging and discharging Vcont points continuously, making the voltage of Vcont points rise or fall.

- There is a finite rise/fall time that creates a dead-zone in the PFD response. Assume that the frequency/phase of the divider and reference are nearly matched so that the phase error is small. Ideally a shorter and shorter duty cycle signal would be generated on up or down, but as the duty cycle approaches the rise time of the pulses, the pulse amplitude will begin to decay, thus lowering the gain of the PFD. We see that the gain of the PFD flattens for small inputs.

1. **What's the advantage of the Pulse swallow divider in Fig. 10.1 over a fixed (NR+S) divider when used in Integer-N Frequency Synthesizer ?**

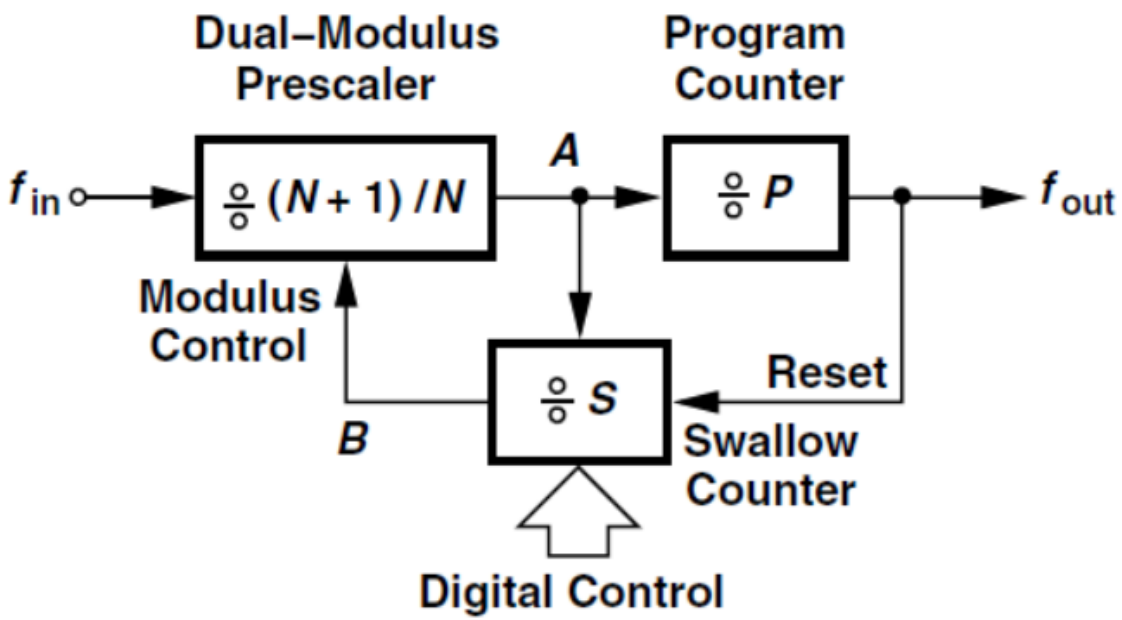

Fig. 10.1

1. Pulse swallow divider is programmable
2. The combination of prescaler and multiple counters greatly reduces the power consumption of the Divider

2. How can the XOR of Fig. 10.2 be modified to provide differential outputs?

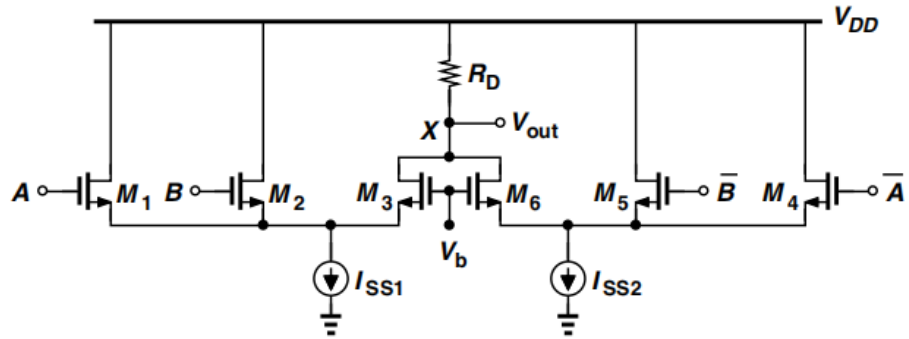

Fig. 10.2

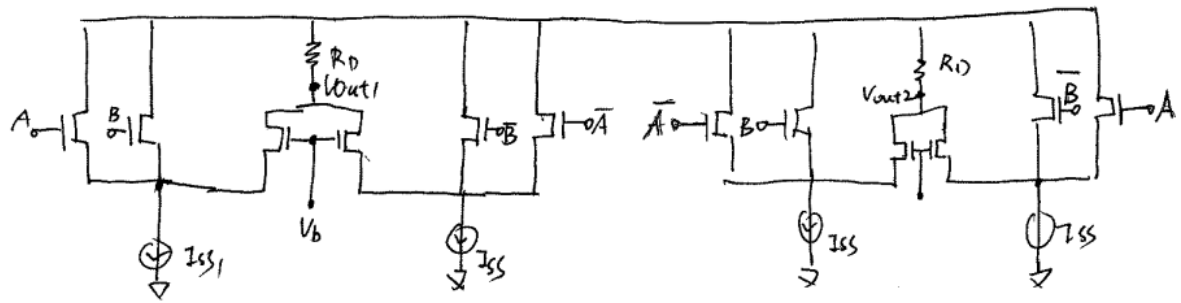

$$\therefore V_{out1} = \bar{A}B + A\bar{B} \;;$$

$$\overline{V_{out1}} = \overline{\bar{A}B + A\bar{B}} = (A+\bar{B})\cdot(\bar{A}+B)$$

$$= A\cdot B + \bar{B}\cdot\bar{A}.$$

$$\therefore V_{out2} = A\cdot B + \bar{A}\cdot\bar{B}$$

1. What's the advantage and disadvantage of the Miller Divider over CML Logic?

- With a shorter delay, Miller divider can provide a higher speed than CML logic
- However, that the divider loop requires some cycles to reach steady state, i.e., it does not divide correctly instantaneously

2. Analyze the circuit of Fig. 11.1 if S1 is turned on when CK is at high level and S2 is turned on when CK is at low level , Redraw the waveform at node D_{out}.

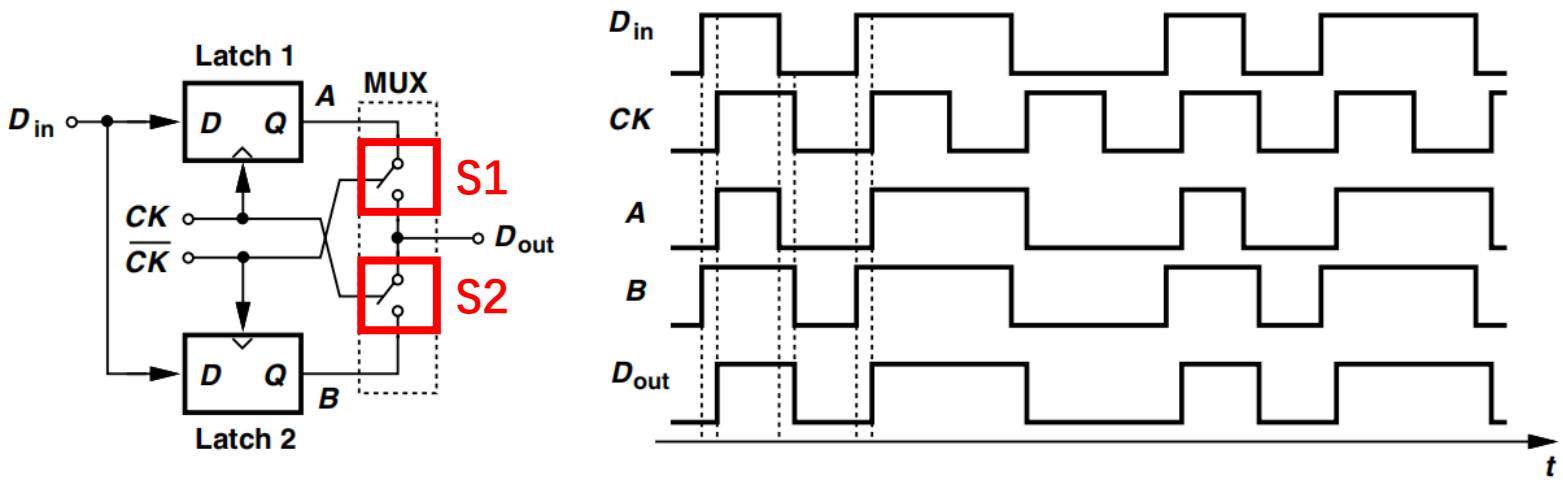

Fig. 11.1

Previously, when CK is high B is selected.

Now, when CK is high. A is selected.

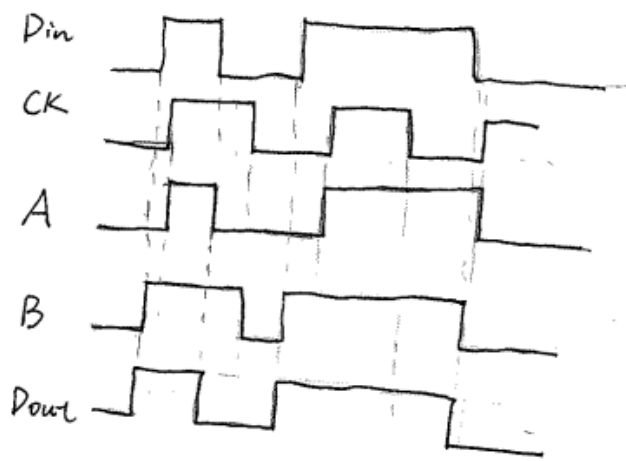

1. **Following the derivations leading to Eq. (12.16) as shown below, prove that the other 50% of supply power is dissipated by the transistor itself.**

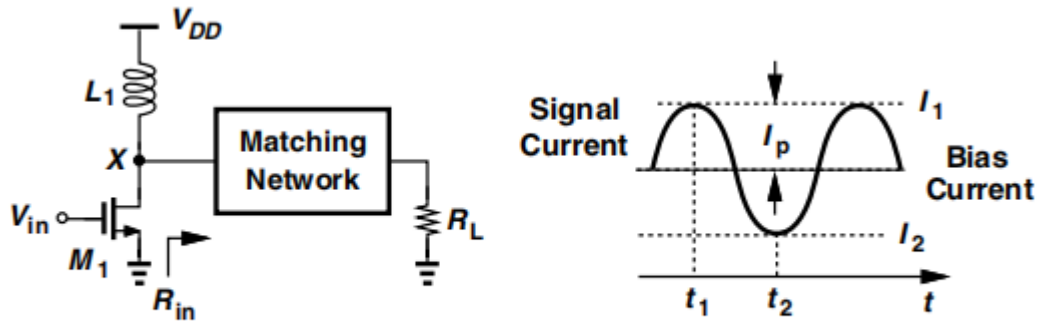

Figure 12.11 *Class A stage.*

Let us now compute the maximum drain (collector) efficiency of class A amplifiers. To reach maximum efficiency, we allow V_X in Fig. 12.11 to reach $2V_{DD}$ and nearly zero. Thus, the power delivered to the matching network is approximately equal to $(2V_{DD}/2)^2/(2R_{in}) = V_{DD}^2/(2R_{in})$, which is also delivered to R_L if the matching network is lossless. Also, recall from Example 12.1 that the inductive load carries a constant current of V_{DD}/R_{in} from the supply voltage. Thus,

$$\eta = \frac{V_{DD}^2/(2R_{in})}{V_{DD}^2/R_{in}} \tag{12.15}$$

$$= 50\%. \tag{12.16}$$

Assume a current bias of M1 equals to $\frac{V_{DD}}{R_{in}}$

Only on this condition, $\eta = 50\%$

$$V_x(t) = V_{DD}(1 + cos\omega t)$$

$$I_d(t) = \frac{V_{DD}}{R_{in}}(1 + cos\omega t)$$

$$P_{M1} = \frac{1}{2T}\int_0^T V_x(t)I_d(t)dt = \frac{1}{2T}\int_0^T \frac{V_{DD}^2}{R_{in}}(1 + 2cos\omega t + \cos^2 \omega t)dt = \frac{3V_{DD}^2}{4R_{in}}$$

2. Why do power amplifiers need high linearity, and how to measure the nonlinearity of power amplifiers?

a) PA nonlinearity leads to: 1) high adjacent channel power as a result of spectral regrowth, and 2) amplitude compression which would cause information damage especially in ASK modulation.

b) 1-dB compression point.

1. Calculations leading to Eq. (12.77) below assume that the amplitude signal experiences a delay mismatch of ΔT . Please repeat the calculations but assuming that the phase signal experiences a delay mismatch of ΔT instead.

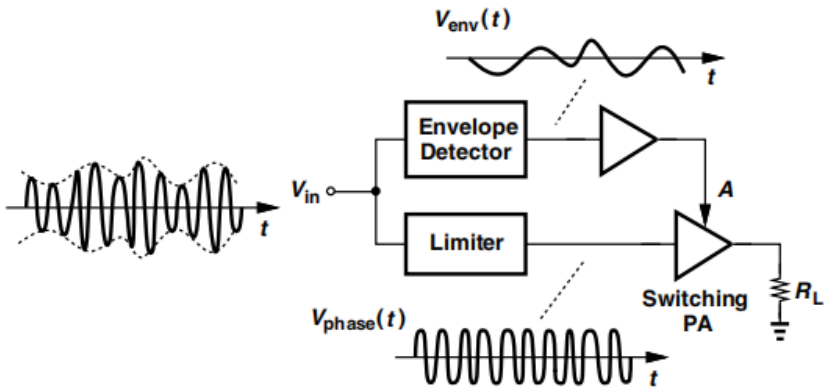

Figure 12.46 *Envelope elimination and restoration.*

12.7.2 Polar Modulation Issues

Polar modulation entails a number of issues. First, the mismatch between the delays of the envelope and phase paths corrupts the signal in Fig. 12.46. To formulate this effect, we assume a delay mismatch of ΔT and express the output as

$$V_{out}(t) = A_0 V_{env}(t - \Delta T)\cos[\omega_0 t + \phi(t)]. \tag{12.75}$$

For a small ΔT, $V_{env}(t - \Delta T)$ can be approximated by the first two terms in its Taylor series:

$$V_{env}(t - \Delta T) \approx V_{env}(t) - \Delta T \frac{dV_{env}(t)}{dt}. \tag{12.76}$$

It follows that

$$V_{out}(t) \approx A_0 V_{env}(t)\cos[\omega_0 t + \phi(t)] - \Delta T \frac{dV_{env}(t)}{dt}\cos[\omega_0 t + \phi(t)]. \tag{12.77}$$

Assuming the phase signal experiences a delay mismatch of ΔT

$$V_{out} = A_0 V_{env}(t)\cos[\omega_0(t-\Delta T)+\emptyset(t-\Delta T)] = A_0 V_{env}(t)\cos\left[\omega_0 t - \omega_0\Delta T + \emptyset(t) - \Delta T\cdot\frac{d\emptyset(t)}{dt}\right]$$

$$\therefore V_{out} = A_0 V_{env}(t)\cos[\omega_0 t+\emptyset(t)]\cos\left[\left(\omega_0+\frac{d\emptyset(t)}{dt}\right)\Delta T\right] + A_0\, V_{env}(t)\sin[\omega_0 t+\emptyset(t)]\sin\left[\left(\omega_0+\frac{d\emptyset(t)}{dt}\right)\Delta T\right]$$

Assume $\Delta T \ll \frac{1}{\omega_0+\frac{d\emptyset(t)}{dt}}$

$$\therefore V_{out} \approx A_0 V_{env}(t)\cos[\omega_0 t+\emptyset(t)] + \Delta T\left(\omega_0+\frac{d\emptyset(t)}{dt}\right)A_0 V_{env}(t)\sin[\omega_0 t+\emptyset(t)]$$

From the second term, we can also conclude that this mismatch ΔT leads to substantial spectral regrowth.

1. **Why is it necessary to design matching network in power amplifier, and what is the difference between large signal impedance matching in power amplifier and small signal impedance matching?**

Without matching network, we should have a big voltage at the output of PA, which would break down the transistor in PA. The network transfers the load resistance to a lower value so that smaller voltage swings still deliver the required power.

Large signal impedance matching would change the DC operating point while the small signal impedance matching would not.

2. **What's the defect of PA forward linearization?**

It is difficult to design a OTA with a gain of $\frac{1}{A_v}$ and make all the OTAs work at a high frequency.

3. **Please explain the AM-PM Conversion in Polar modulation Realization**
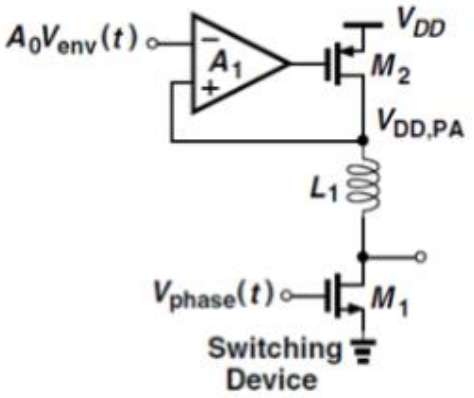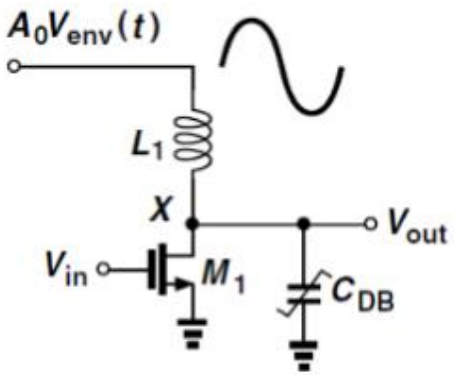
As $V_{DD,PA}$ swings up and down to track $A_0V_{env}(t)$, the parasitic capacitance C_{DB} varies, so the phase signal is corrupted by the envelope signal.