集成电路原理与设计
反相器

谭志超
zhichaotan@zju.edu.cn

Goals

- Quantification of integrity, performance and energy metrics of an inverter
- Optimization of an inverter design

Design metrics of the gate

- ***Cost:*** *complexity, area*
- ***Integrity and robustness:*** *static (or steady-state) behavior*
- ***Performance:*** *dynamic (or transient) response*
- ***Energy efficiency:*** *energy and power consumption*

Outline

- Inverter Basic Characteristics
- Static Behavior
- Dynamic Behavior
- Power, Energy

Reference:
Chapter 5, <Digital Integrated Circuits: A design perspective> Rabaey著

CMOS Inverter: A first glance

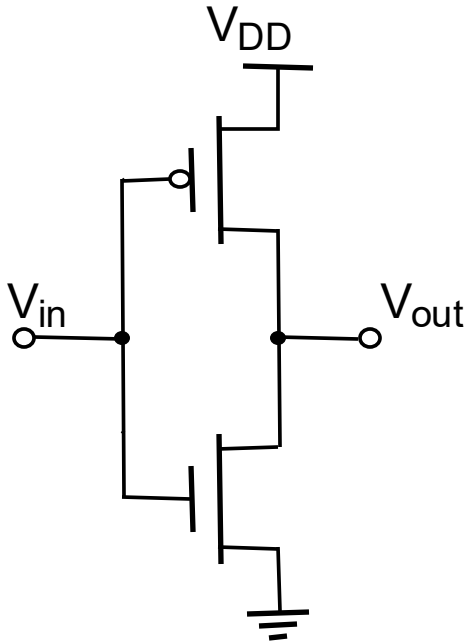

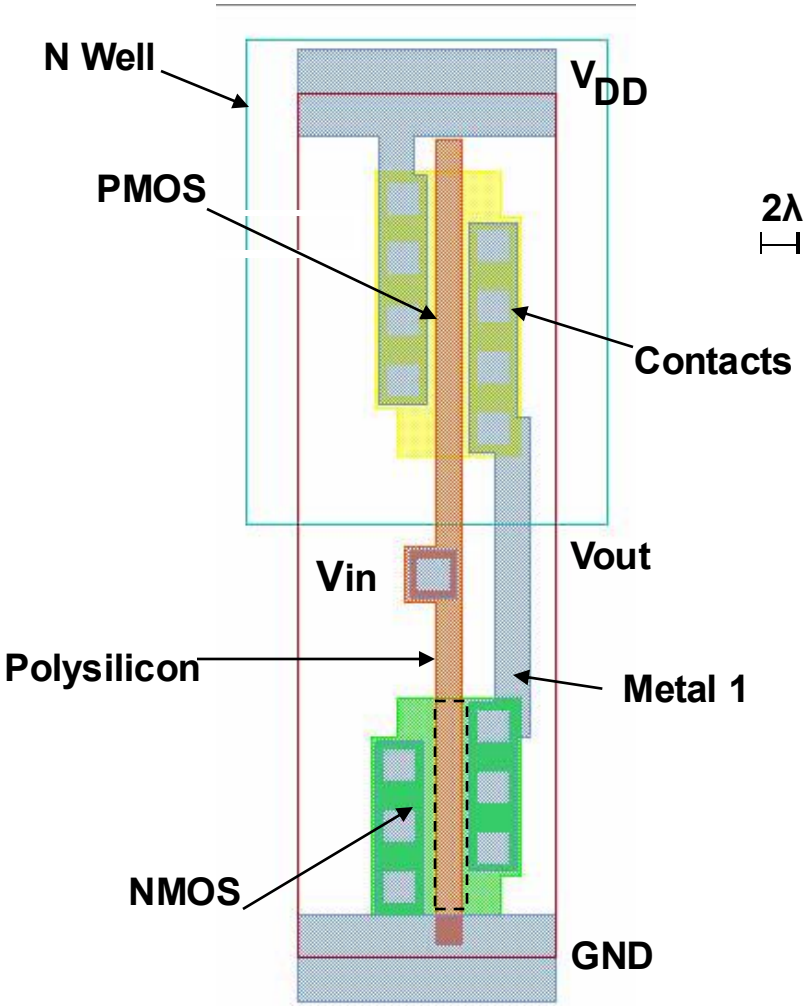

Appendix：Two Inverters

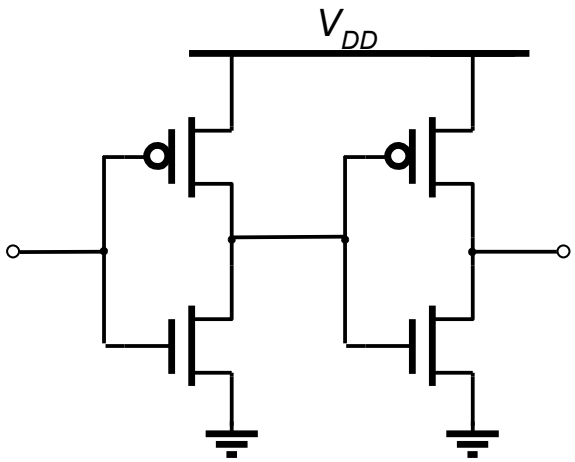

Share power and ground

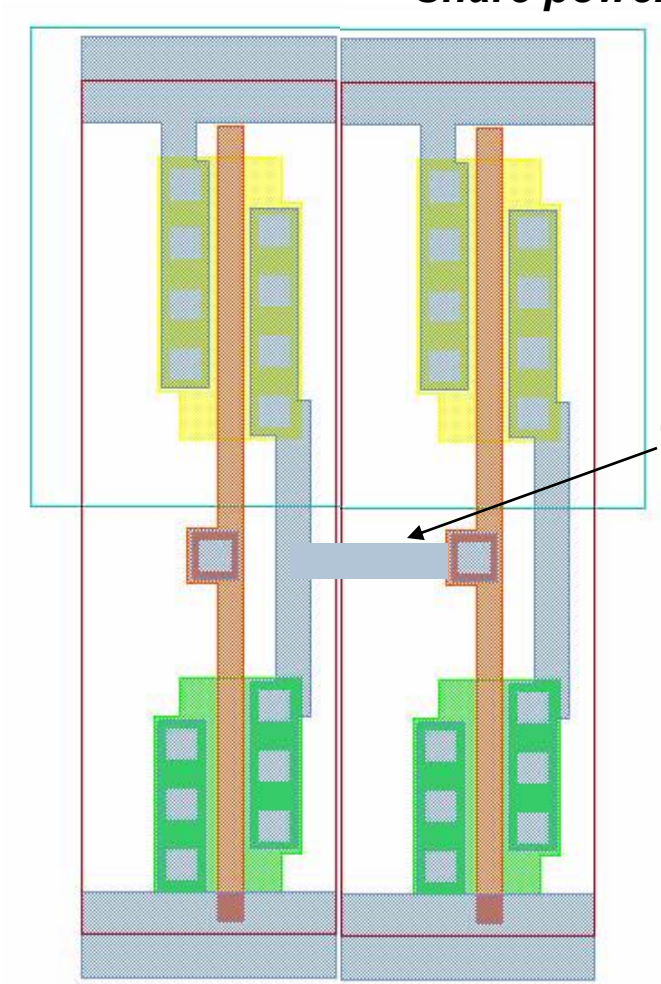

First-Order DC Analysis

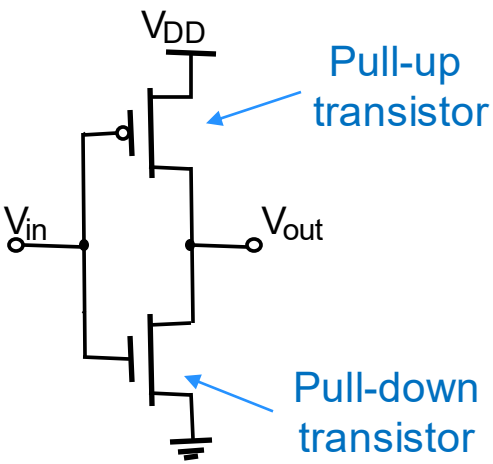

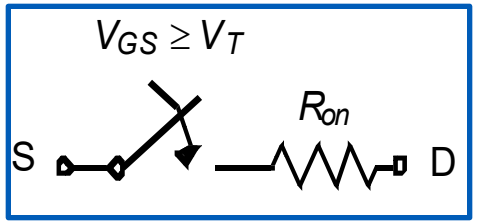

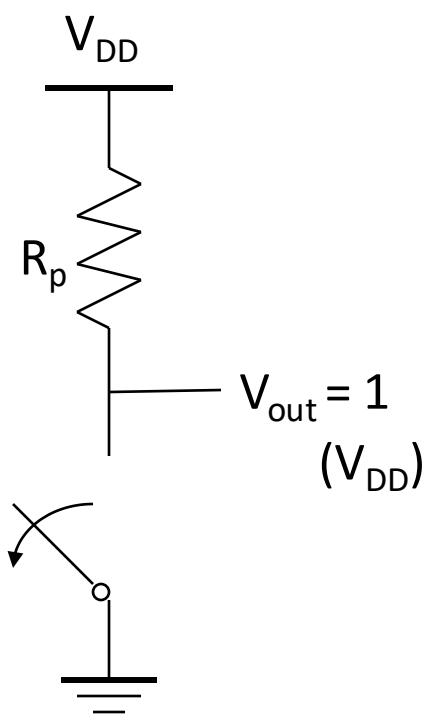

$V_{in} = 0$

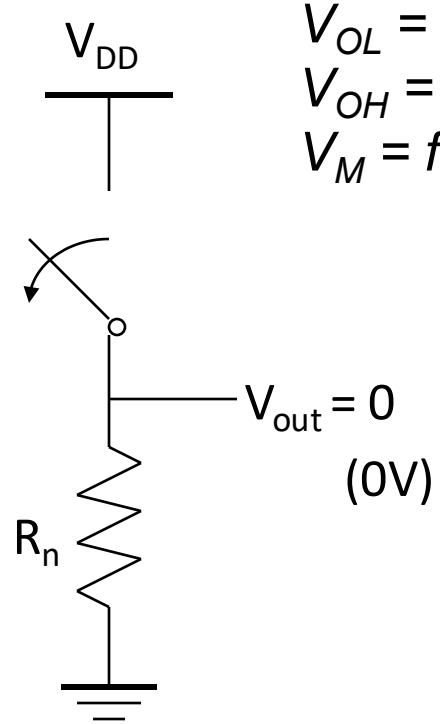

$V_{in} = V_{DD}$

$V_{OL} = 0$
$V_{OH} = V_{DD}$
$V_M = f(R_n, R_p)$

First-Order DC Analysis: Properties

- Full rail-to-rail swing ⇒ high noise margins
- Logic levels are not dependent upon the relative device sizes
  - ⇒ transistors can be minimum size *ratioless*
- Always a path between V_{out} to V_{DD} or GND in a steady state
  - ⇒ low output impedance (~kΩ)
  - ⇒ less sensitive to noise and disturbances
- Extremely high input resistance
  - ⇒ nearly zero steady-state input current
  - ⇒ large fan-out (albeit it with degraded performance: delay)
- No direct path in steady-state between power and ground
  - ⇒ no static power dissipation (ignores leakage current)
- Propagation delay function of load capacitance and resistance of transistors

Review: Short Channel I-V Plot (NMOS/PMOS)

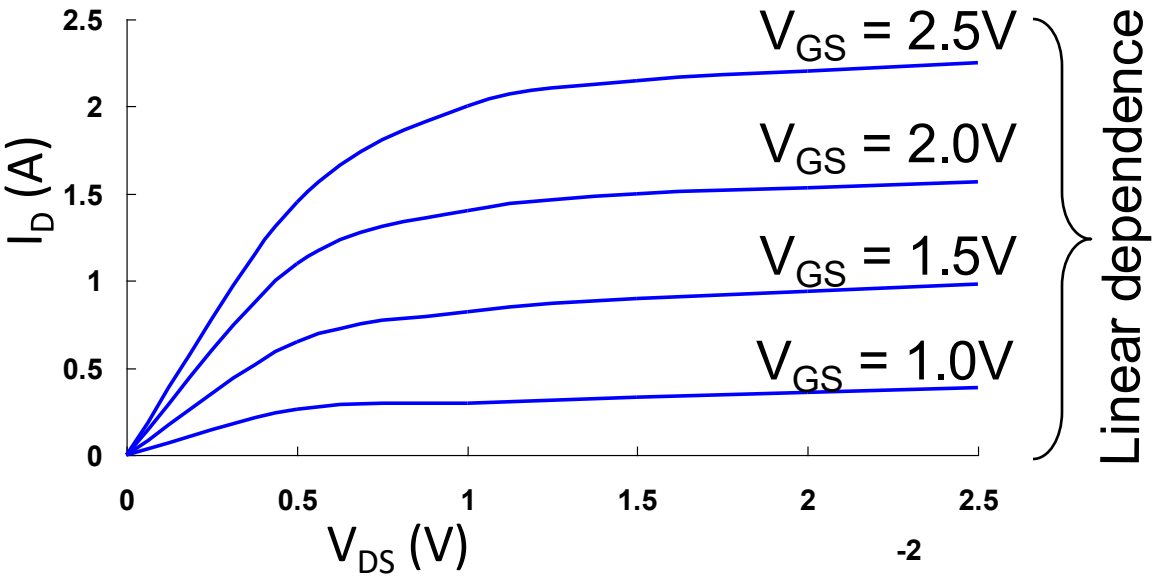

NMOS transistor 0.25um,
L_d = 0.25um, W/L = 1.5,
V_{DD} = 2.5V, V_T = 0.4V

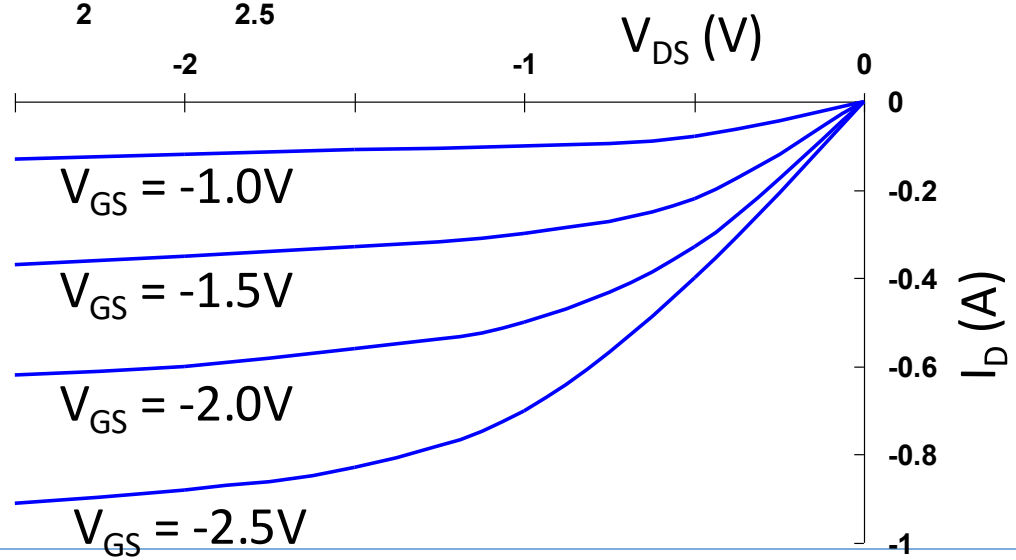

PMOS transistor 0.25um,
L_d = 0.25um, W/L = 1.5,
V_{DD} = 2.5V, V_T = -0.4V

Transforming PMOS I-V Lines

- Want common coordinate set V_{in}, V_{out}, and I_{Dn}

$I_{DSp} = -I_{DSn}$
$V_{GSn} = V_{in}$; $V_{GSp} = V_{in} - V_{DD}$
$V_{DSn} = V_{out}$; $V_{DSp} = V_{out} - V_{DD}$

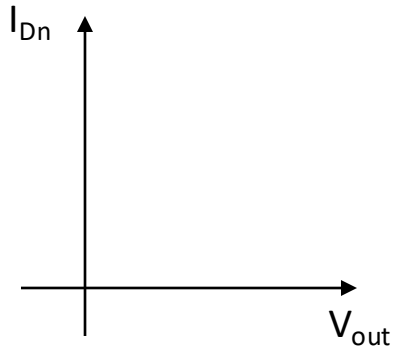

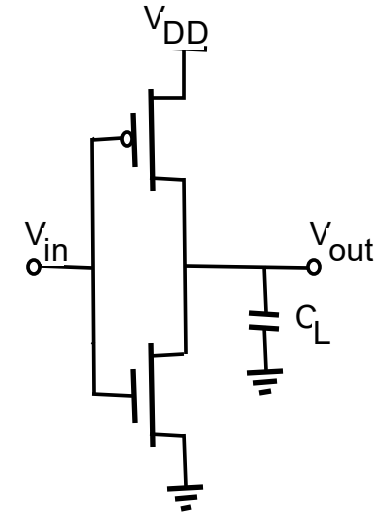

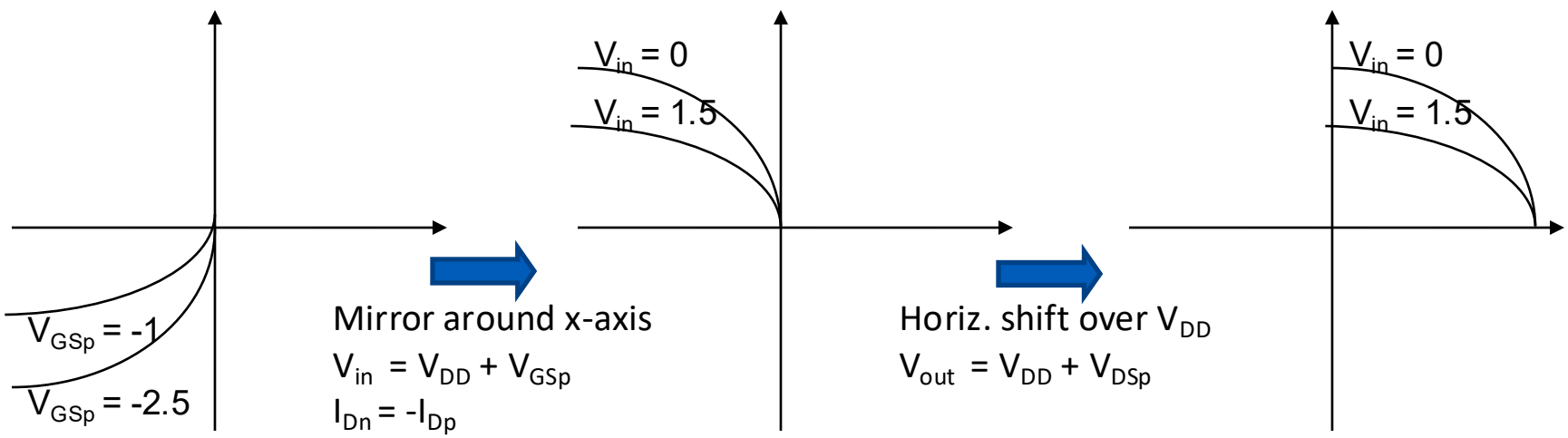

CMOS Inverter Load Lines

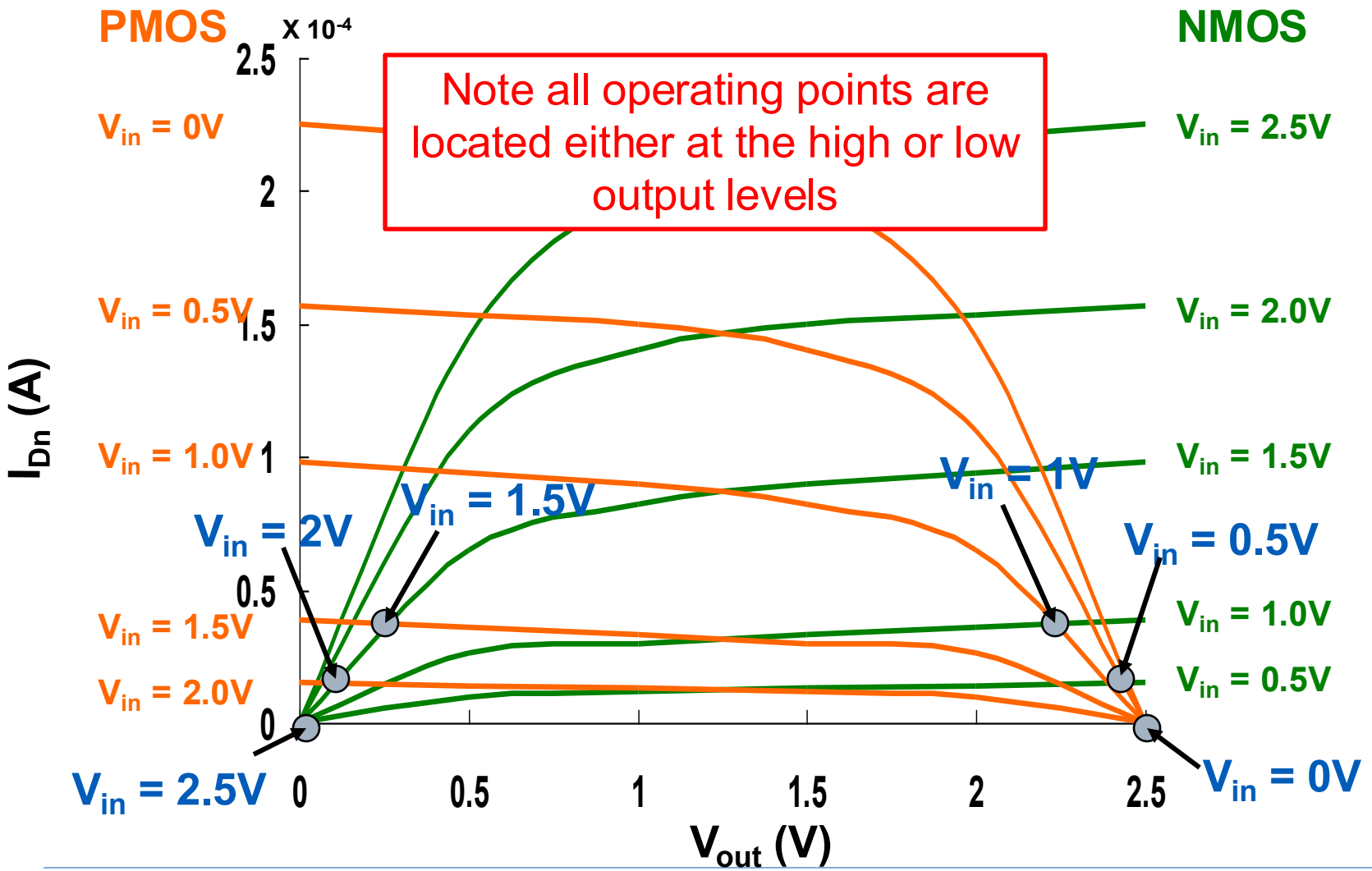

0.25um, $W/L_n = 1.5$, $W/L_p = 4.5$, $V_{DD} = 2.5V$, $V_{Tn} = 0.4V$, $V_{Tp} = -0.4V$

CMOS Inverter VTC

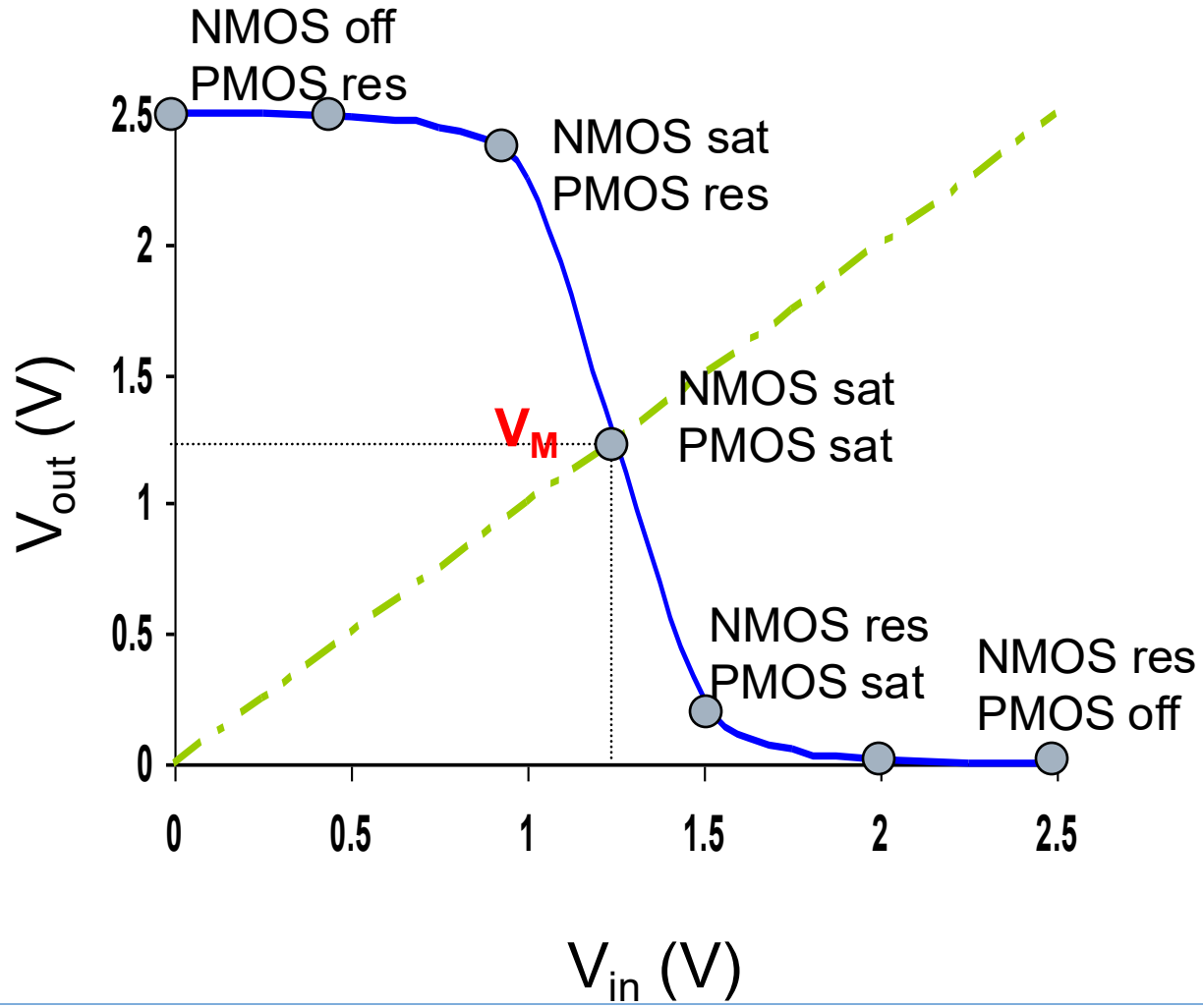

Switch Model of Dynamic Behavior

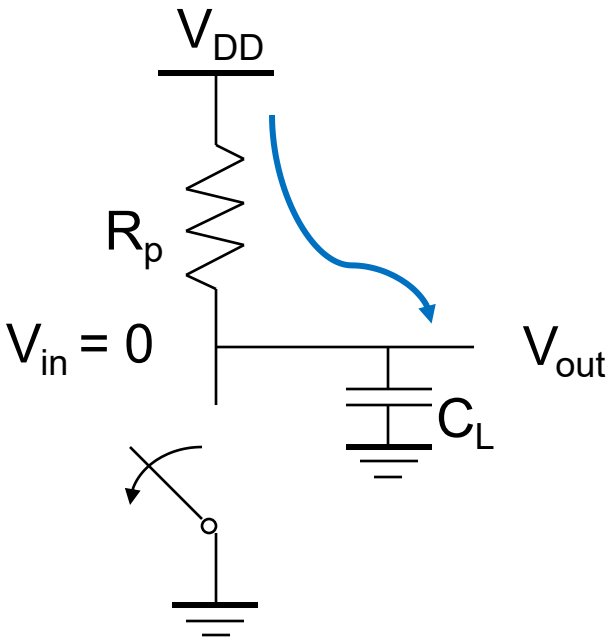

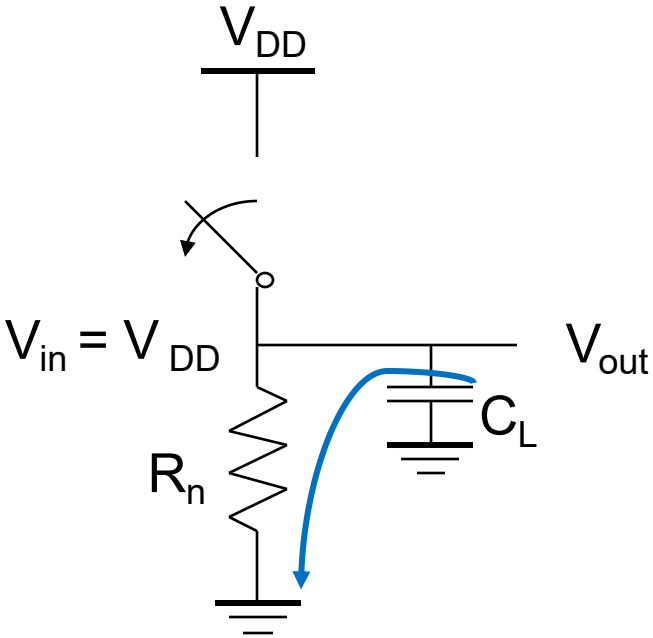

Gate response time is determined by the time to

-- charge C_L through R_p

-- discharge C_L through R_n

A fast gate is build either by keeping the output capacitance small and by decreasing the on-resistance of the transistor

Outline

- Inverter Basic Characteristics
- Static Behavior
  - Switching Threshold
  - Noise Margin
  - Robustness Revisited
- Dynamic Behavior
- Power, Energy

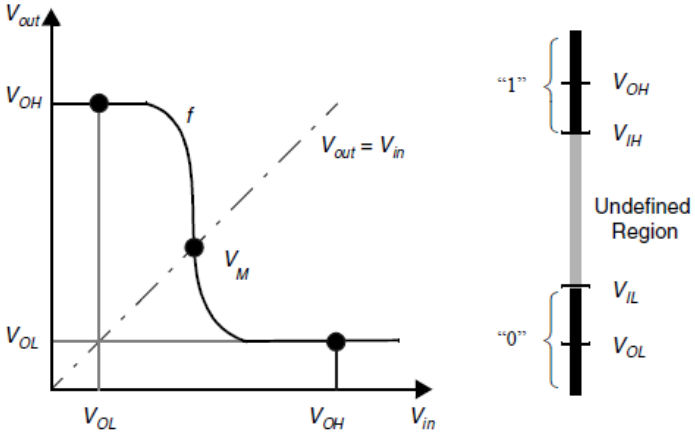

Switching Threshold

- V_M: $V_{in} = V_{out}$ (both PMOS and NMOS in saturation, $V_{DS} = V_{GS}$) assumed to be velocity-saturated ($V_{DSAT} < V_M - V_T$) ,and ignore the channel length modulation effects

$$k_n V_{DSATn}\left(V_M - V_{Tn} - \frac{V_{DSATn}}{2}\right) + k_p V_{DSATp}\left(V_M - V_{DD} - V_{Tp} - \frac{V_{DSATp}}{2}\right) = 0$$

Solving for V_M yields

$$V_M = \frac{\left(V_{Tn} + \frac{V_{DSATn}}{2}\right) + r\left(V_{DD} + V_{Tp} + \frac{V_{DSATp}}{2}\right)}{1 + r} \quad \text{with } r = \frac{k_p V_{DSATp}}{k_n V_{DSATn}} = \frac{\upsilon_{satp} W_p}{\upsilon_{satn} W_n}$$

$$\boxed{V_M \approx r V_{DD} / (1 + r)}$$

r: the relative driving strengths of PMOS/NMOS

-- ***r*** set the switching threshold

-- $\boldsymbol{r \approx 1}$: $V_M = V_{DD}/2 \Rightarrow$ comparable high and low noise margins

--To move V_M upwards, a larger r is required making PMOS wider

--Increasing the strength of NMOS, moves V_M closer to GND

Switching Threshold: *r*

$$V_M \approx rV_{DD}/(1+r) \qquad where\ r = k_p V_{DSATp}/k_n V_{DSATn}$$

Example

In generic 0.25μm CMOS process, V_{DD} = 2.5V, and a minimum size NMOS device: $(W/L)_n$ = 1.5

	V_{T0}(V)	γ($V^{0.5}$)	V_{DSAT}(V)	k'(A/V^2)	λ(V^{-1})
NMOS	0.43	0.4	0.63	115 x 10^{-6}	0.06
PMOS	-0.4	-0.4	-1	-30 x 10^{-6}	-0.1

$$\frac{(W/L)_p}{(W/L)_n} = \frac{115\times10^{-6}\times0.63\times(1.25-0.43-0.63/2)}{30\times10^{-6}\times1.0\times(1.25-0.4+1.0/2)} = 3.5 \Rightarrow (W/L)_p = 3.5 \text{ x } 1.5 = 5.25$$

Velocity saturation does not occur: $V_M = \dfrac{V_{Tn} + r(V_{DD} + V_{Tp})}{1+r}$ with $r = \sqrt{\dfrac{-k_p}{k_n}}$

When designing static CMOS circuits, to balance the driving strengths of the transistors by **making PMOS wider than NMOS**, if one wants to maximize the noise margins and obtain symmetrical characteristics

Noise Margins

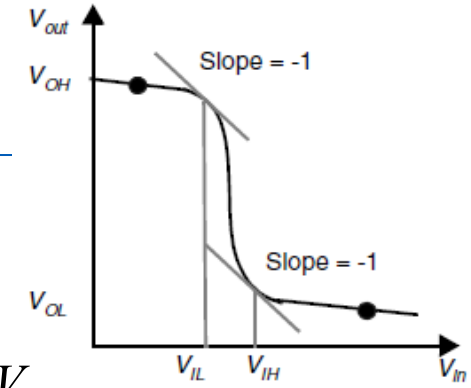

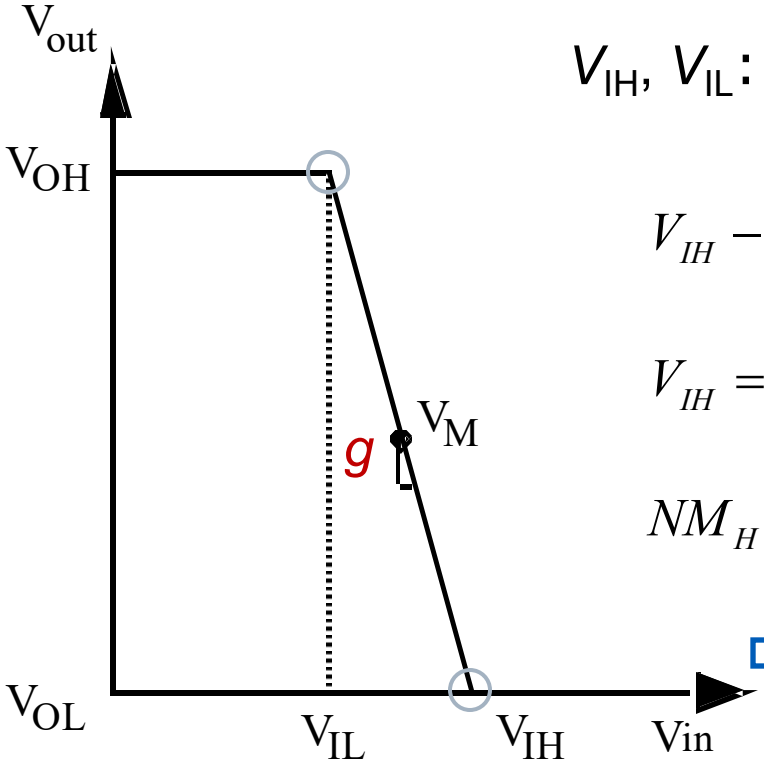

A simplified approach

V_{IH}, V_{IL}: $\dfrac{dV_{out}}{dV_{in}} = -1$

$$V_{IH} - V_{IL} = -\frac{V_{OH} - V_{OL}}{g} = -\frac{V_{DD}}{g}$$

$$V_{IH} = V_M - \frac{V_M}{g} \qquad V_{IL} = V_M + \frac{V_{DD} - V_M}{g}$$

$$NM_H = V_{DD} - V_{IH} \qquad NM_L = V_{IL}$$

⇨ a high gain in transition region

V_M: $g \approx \dfrac{1+r}{(V_M - V_{Tn} - V_{DSATn}/2)(\lambda_n - \lambda_p)}$

? $g \to \infty$

$$NM_H = V_{OH} - V_M$$

$$NM_L = V_M - V_{OL}$$

Inverter Gain

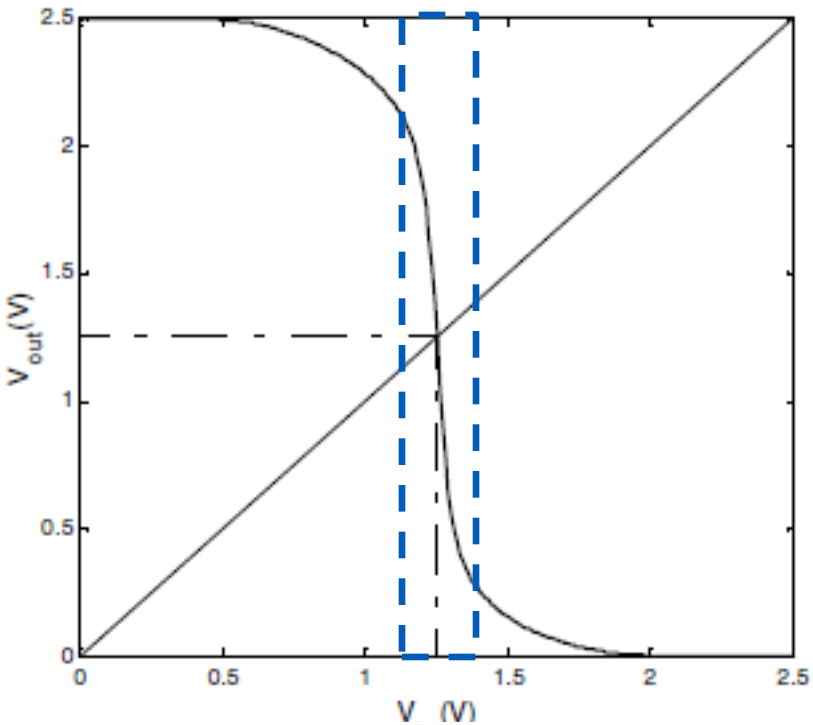

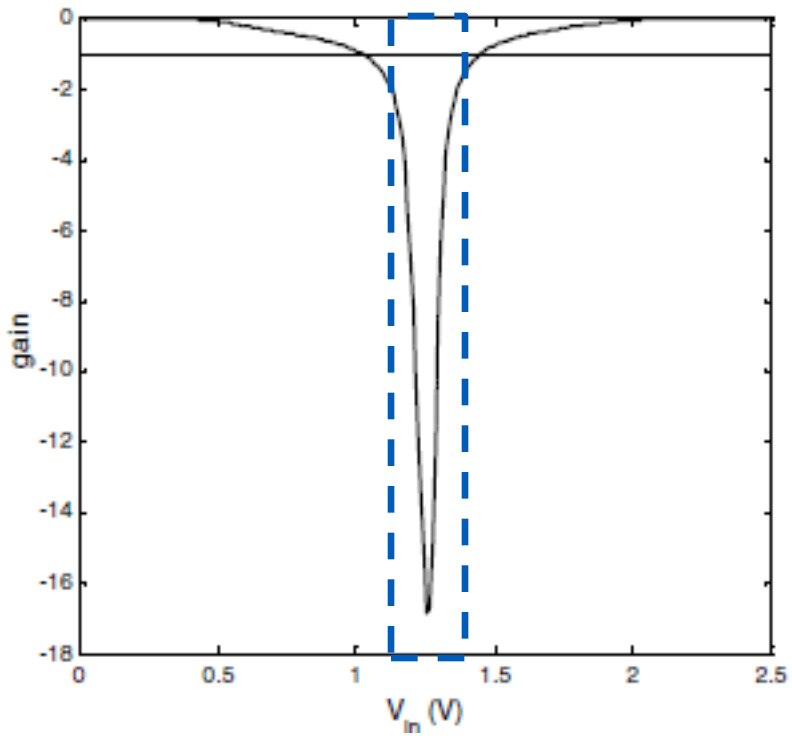

$$g = -\frac{1}{I_D(V_M)}\frac{k_n V_{DSATn} + k_p V_{DSATp}}{\lambda_n - \lambda_p} \approx \frac{1+r}{\left(V_M - V_{Tn} - V_{DSATn}/2\right)\left(\lambda_n - \lambda_p\right)}$$

Analog IC vs. Digital IC

Impact of Process Variations

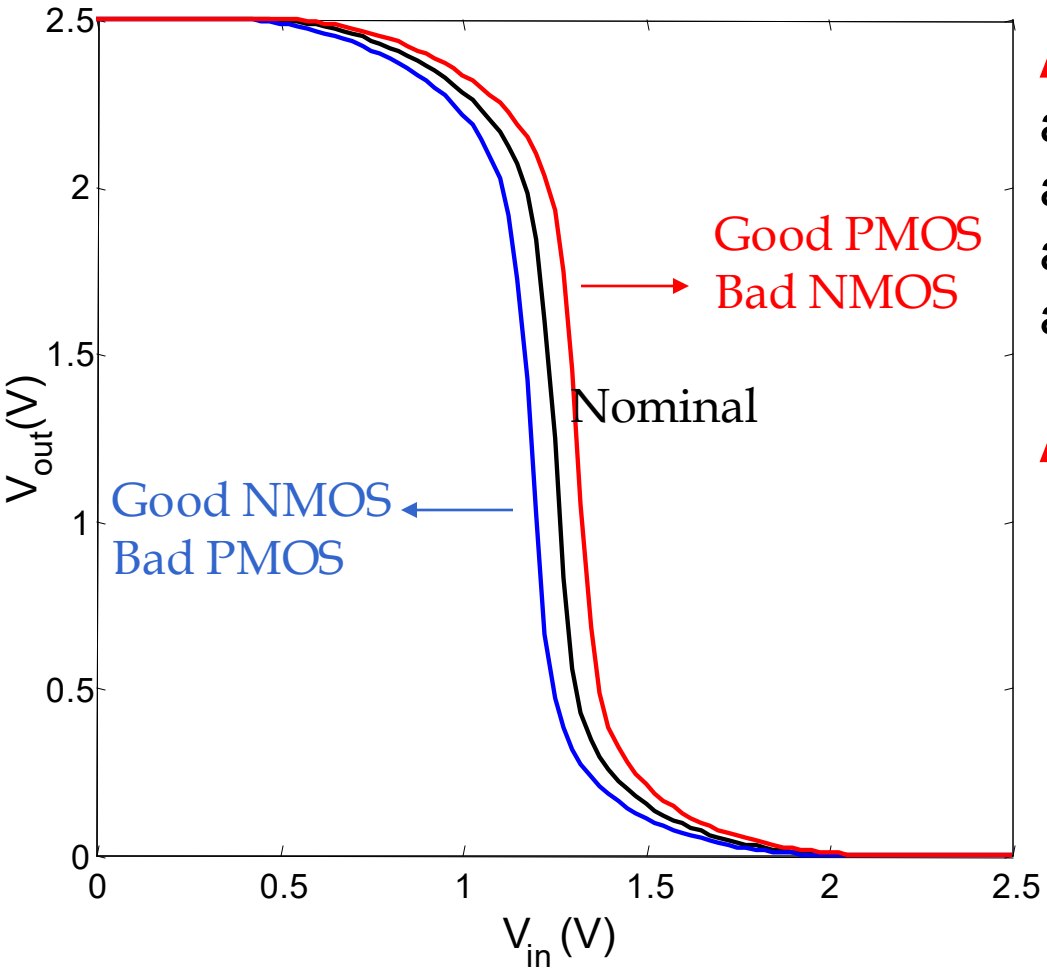

Corner model

A good device:
a small oxide thickness (-3nm),
a small length (-25nm),
a higher width (+30nm)
a smaller threshold (-60mV).

A bad device: the opposite

⇨ **a shift in V_M**

Gain as a function of V_{DD}

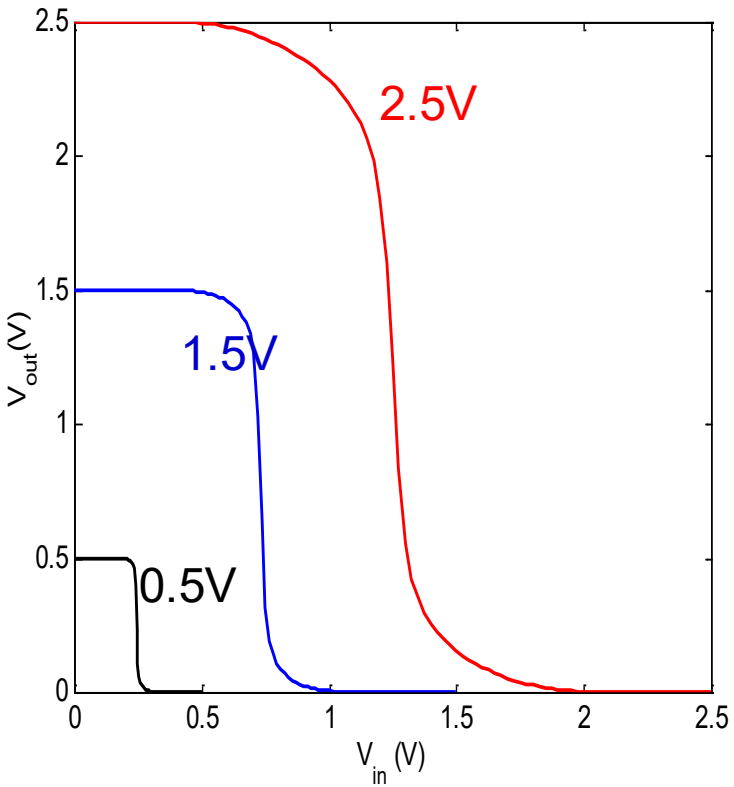

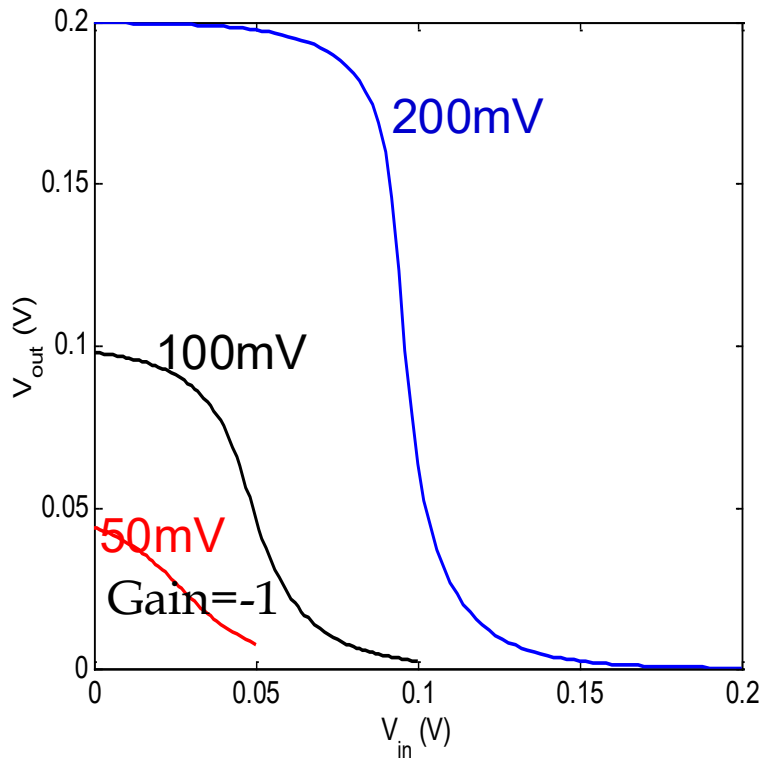

$V_{TH}=\pm 0.4V$

$$V_{DD\min} > (2 \sim 4)\frac{kT}{q} \qquad \phi_T = \frac{kT}{q} = 26mV\ (300\text{K})$$

Outline

- Inverter Basic Characteristics
- Static Behavior
- Dynamic Behavior
  - Propagation delay: first-order analysis
  - Propagation delay from perspective
- Power, Energy

C_L in CMOS Inverters

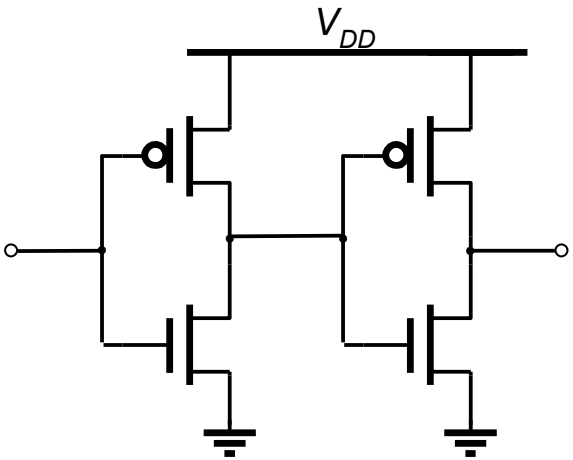

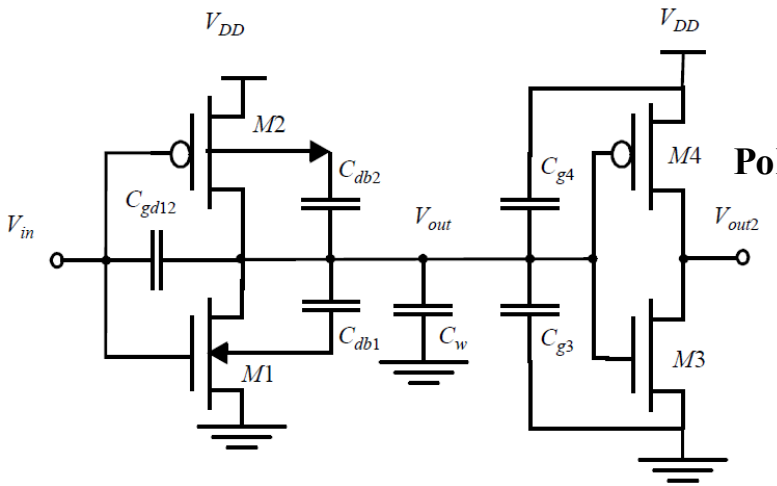

$$C_L = C_{inc} + C_{ext}$$

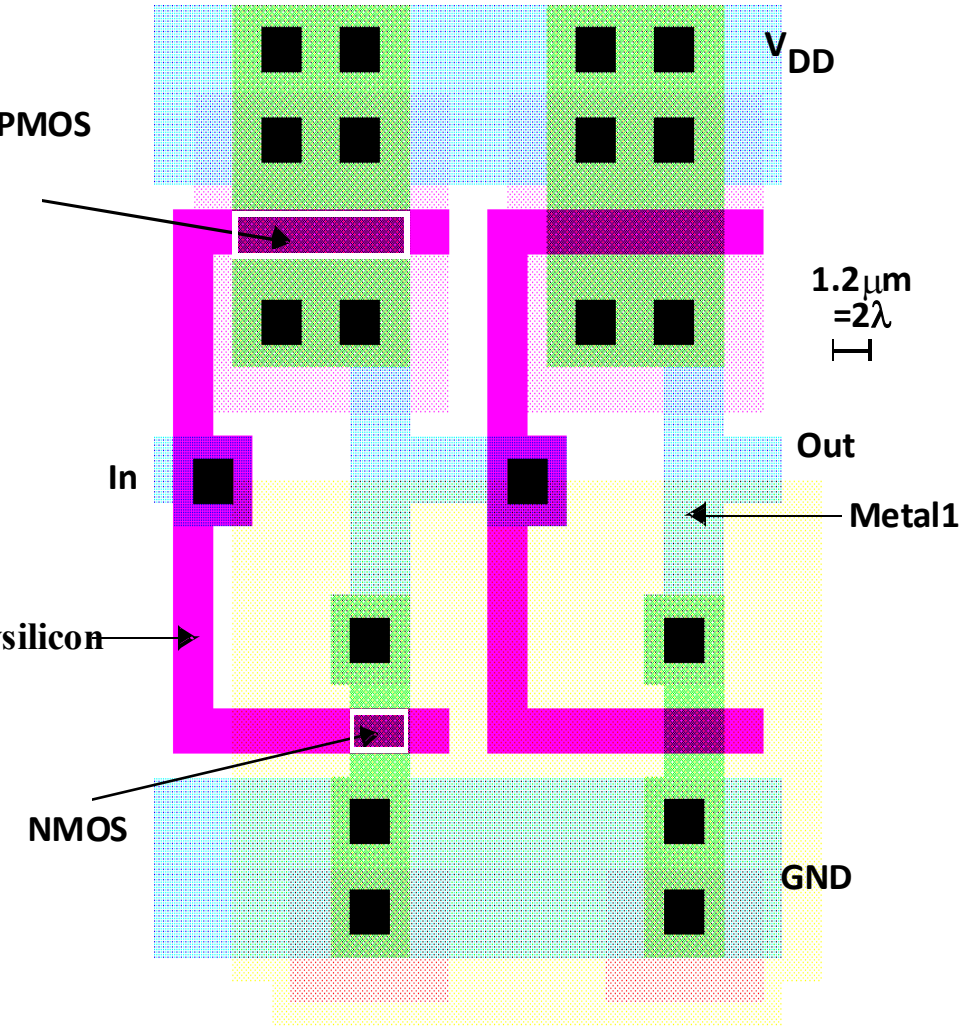

Inverter Propagation Delay

- Propagation delay is proportional to the time-constant of the network formed by the pull-down resistor and the load capacitance

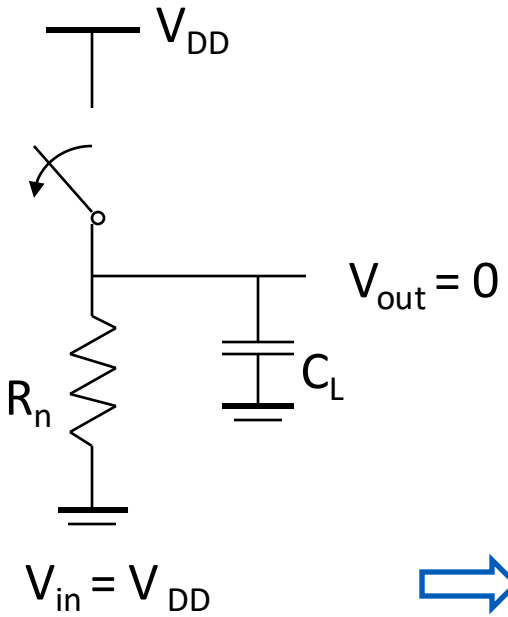

$$t_p = \int_{v_1}^{v_2} \frac{C_L(v)}{i(v)} dv \quad = f(R_n, C_L)$$

first-order linear RC-network:

$$t_{pHL} = \ln(2) R_{eqn} C_L = 0.69 R_{eqn} C_L$$

$$t_{pLH} = \ln(2) R_{eqp} C_L = 0.69 R_{eqp} C_L$$

$$t_p = \left(t_{pHL} + t_{pLH}\right)/2 = 0.69 C_L \left(R_{eqn} + R_{eqp}\right)/2$$

$\Rightarrow$ $t_{pHL} = t_{pLH}$ $\quad R_{eqn} = R_{eqp}$

a symmetrical VTC

Transient Response

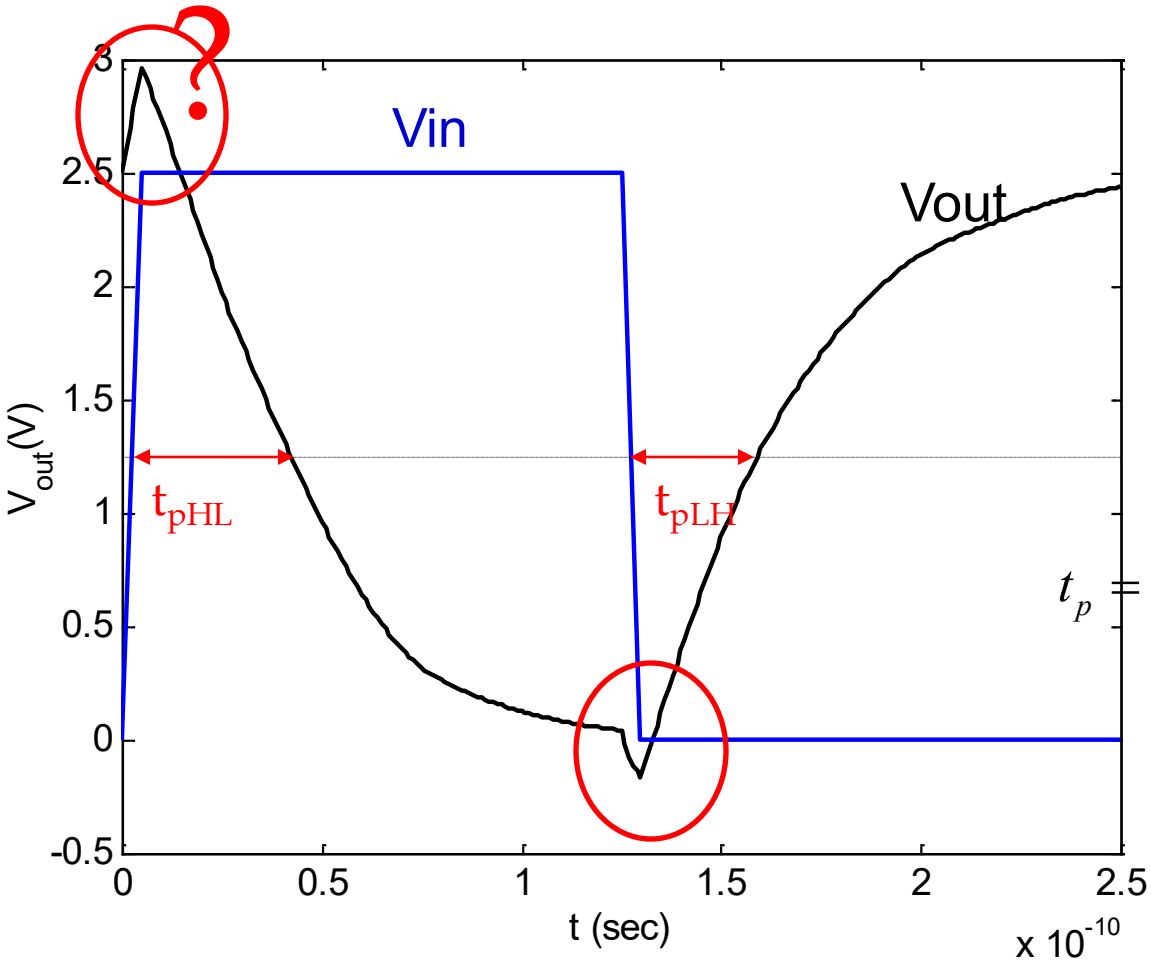

$$t_p = 0.69 C_L \left(R_{eqn} + R_{eqp} \right) / 2$$

Delay as a function of VDD

? How to manipulate or optimize the delay?

$$t_{pHL} = 0.69\frac{3}{4}\frac{C_L V_{DD}}{I_{DSATn}} = 0.52\frac{C_L V_{DD}}{(W/L)_n k'_n V_{DSATn}(V_{DD} - V_{Tn} - V_{DSATn}/2)}$$

$$t_{pHL} \approx 0.52\frac{C_L}{(W/L)_n k'_n V_{DSATn}}$$

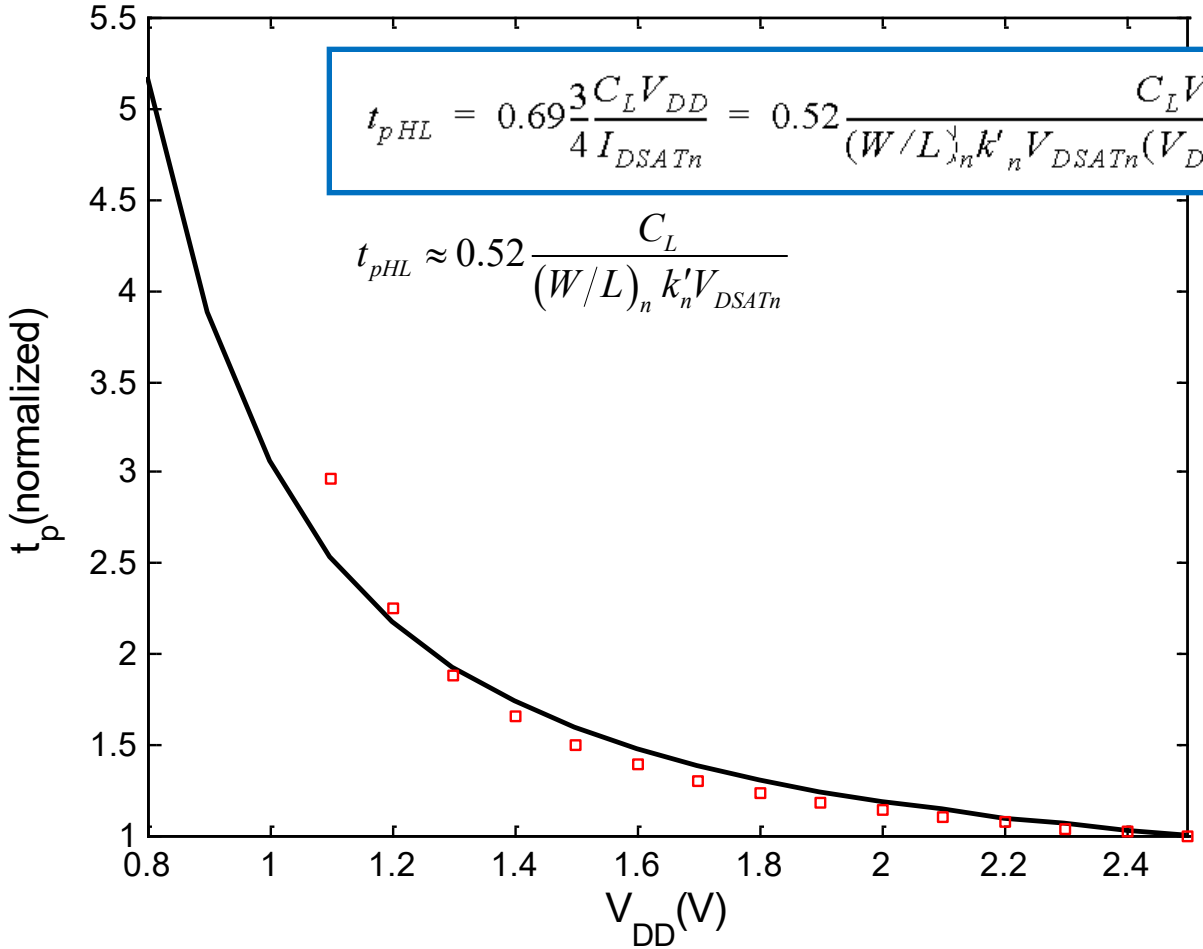

Design for Propagation Delay

- Reduce C_L
  - internal diffusion capacitance of the gate itself
    - ⇨ *keep the drain diffusion as small as possible*
  - interconnect capacitance
  - Fan out capacitance
- Increase W/L ratio of the transistor

  the most powerful and effective performance optimization tool in the hands of the designer
  - self-loading! $C_{inc} > C_{ext}$
- Increase V_{DD}
  - **trade-off: energy vs. performance**
  - increasing V_{DD} above a certain level yields only very minimal improvements
  - reliability：oxide breakdown, hot-electron effects

Outline

- Inverter Basic Characteristics
- Static Behavior
- Dynamic Behavior
  - Propagation Delay: First-order Analysis
  - Propagation Delay from Perspective
    - ✓ NMOS/PMOS Ratio
    - ✓ Sizing Inverters for Performance
    - ✓ Sizing a Chain of Inverters and its Stage
    - ✓ Rise/fall Time of Input Signal
    - ✓ Delay in Long Interconnect Wires

NMOS/PMOS Ratio

- Symmetrical VTC and $t_{pHL}=t_{pLH}$: $\beta = (W/L_p)/(W/L_n)=3\sim3.5$
- If speed is the only concern, reduce the width of the PMOS device

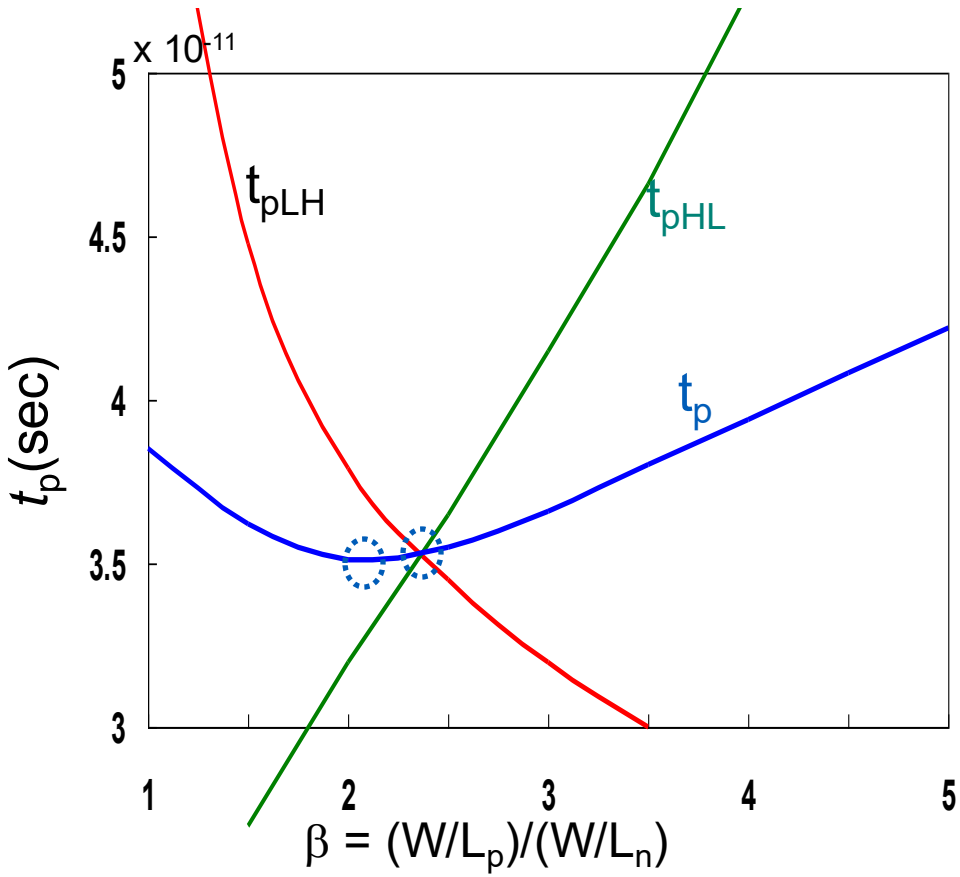

$$t_p = \left(t_{pHL} + t_{pLH}\right)/2$$

widening PMOS degrades t_{pHL} due to larger parasitic capacitance

$$\frac{\partial t_p}{\partial \beta} = 0 \Rightarrow \beta_{opt} = \sqrt{\gamma(1+\frac{C_w}{C_{dn1}+C_{gn2}})}$$

- β of 2.4 (= 31 kΩ/13 kΩ): symmetrical response
- β of 1.6 to 1.9: optimal performance

Device Sizing for Performance

- Divide capacitive load, C_L, into C_L,= C_{int}+ C_{ext}
  - C_{int}: intrinsic (self-loading) cap - diffusion and gate-drain (Miller) effect
  - C_{ext}: extrinsic load cap- wiring and fan out

    $t_p = 0.69\ R_{eq}\ C_{int}\ (1 + C_{ext}/C_{int}) = t_{p0}\ (1 + C_{ext}/C_{int})$
  - intrinsic delay (unloaded, C_{ext}=0)

    $t_{p0} = 0.69\ R_{eq}\ C_{int}$, C_{int}
- Size factor: S (reference gate)

$C_{int} = SC_{iref}$ $\quad R_{eq} = C_{eq}/S$

$t_p = 0.69\ R_{eq}\ C_{int}\ (1 + C_{ext}/C_{int})$

$= t_{p0}\ (1 + C_{ext}/SC_{iref})$

-- t_{p0} : the size of gate ✗

technology and layout ✓

-- S↑, t_p -> t_{p0}

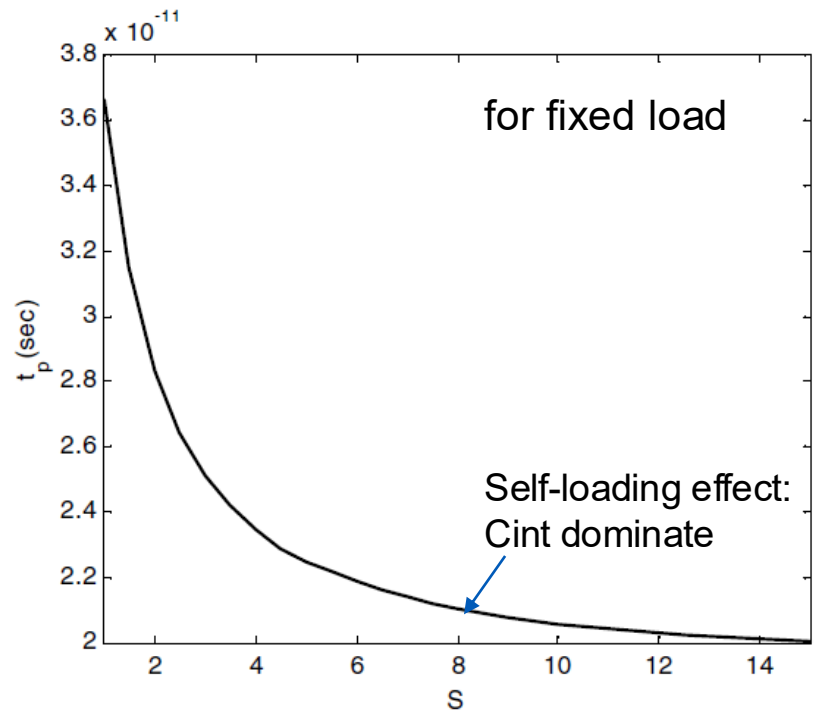

Impact of Fanout on Delay

- C_{ext}: a function of the fanout of the gate

  The larger the fanout, the larger the external load.
- Determine the input loading effect of the inverter.
  - Both C_g and C_{int} are proportional to the gate sizing $C_{int} = \gamma C_g$

    $t_p = t_{p0}(1 + C_{ext}/\gamma C_g) = t_{p0}(1 + f/\gamma)$

    the effective fan-out: $f = C_{ext}/C_g$
  - The delay of an inverter is a function of f

Apply to Inverter Chain

- Goal: minimize the delay through an inverter chain

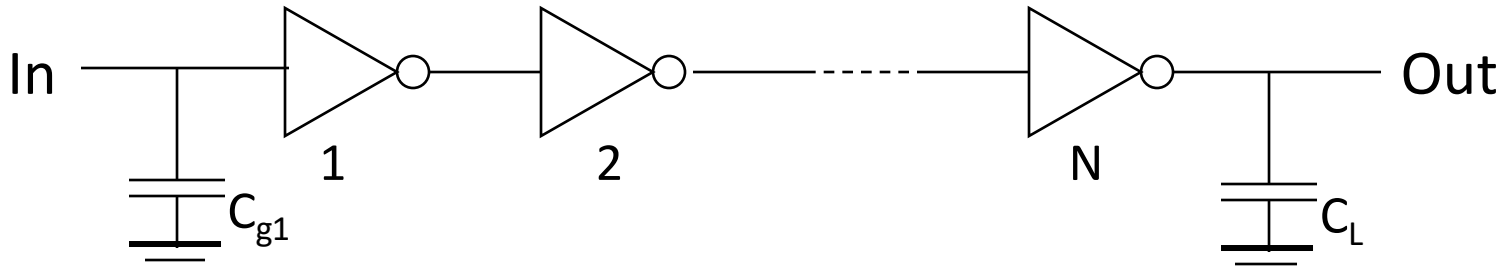

The delay of the *j*-th inverter stage:

$$t_{p,j} = t_{p0}\,(1 + C_{g,j+1}/(\gamma C_{g,j})) = t_{p0}(1 + f_j/\gamma)$$

and $t_p = t_{p1} + t_{p2} + \ldots + t_{pN}$ ⇨ $t_p = \Sigma t_{p,j} = t_{p0}\,\Sigma\,(1 + C_{g,j+1}/(\gamma C_{g,j}))$

$$\frac{\partial t_p}{\partial C_{g,j}} = 0$$ ⇨ $C_{g,j+1}/C_{g,j} = C_{g,j}/C_{g,j-1}$

$$C_{g,j} = \sqrt{C_{g,j-1}C_{g,j+1}}$$

- The optimum size of each inverter is the geometric mean of its neighbors sizes.

Apply to Inverter Chain

- The optimum size of each inverter will have the same effective fan-out and the same delay $f = \sqrt[N]{C_L / C_{g,1}} = \sqrt[N]{F}$

  F: the overall effective fan-out of the circuit ($F = C_L/C_{g,1}$)

- The minimum delay through the inverter chain is

$$t_p = N t_{p0} \left(1 + \sqrt[N]{F} / \gamma\right)$$

Example

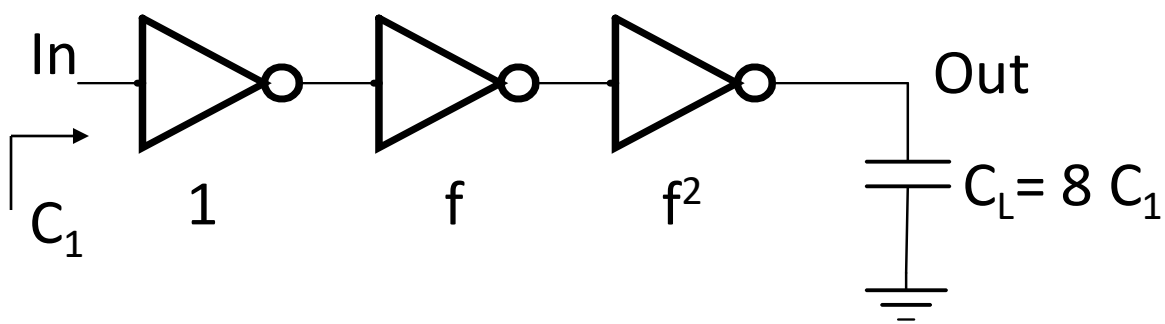

C_L/C_1 has to be evenly distributed across N = 3 stages: $f = \sqrt[3]{8} = 2$

Optimum Stages *N* in Inverter Chain

- What is the optimal value for *N* given *F* (=f^N) ?

$$t_p = N t_{p0}\left(1+\sqrt[N]{F}/\gamma\right) \qquad f = \exp\left(1+\gamma/f\right)$$

  - if *N* is too large, the intrinsic delay of the stages becomes dominate
  - if *N* is too small, the effective fan-out of each stage becomes dominate
  - The optimal number of stages: ***N*=ln(*F*)**
    the effective fanout of each stage *f*=2.71828=*e*

Optimum Effective Fan-Out

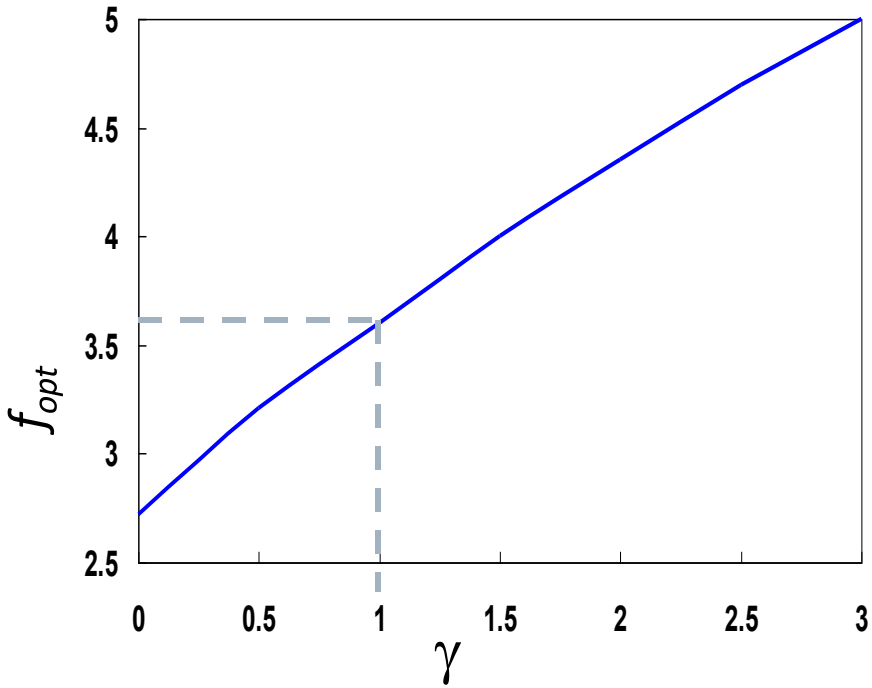

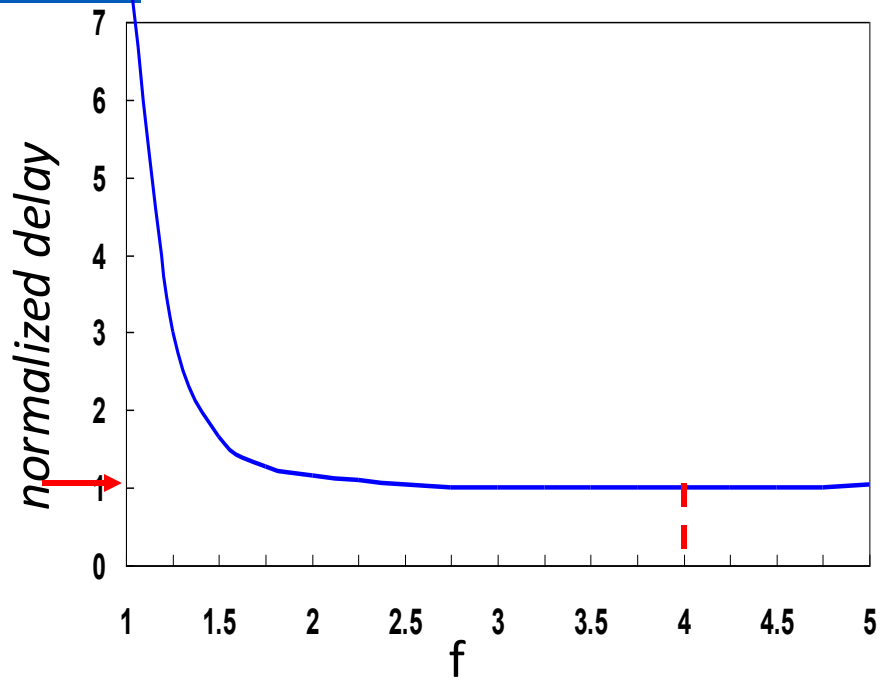

- Choosing f larger than optimum has little effect on delay and reduces the number of stages (and area).
  - **Common practice to use: f = 4 (for γ = 1)**
  - But too many stages has a substantial negative impact on delay

Example：Inverter (Buffer) Staging

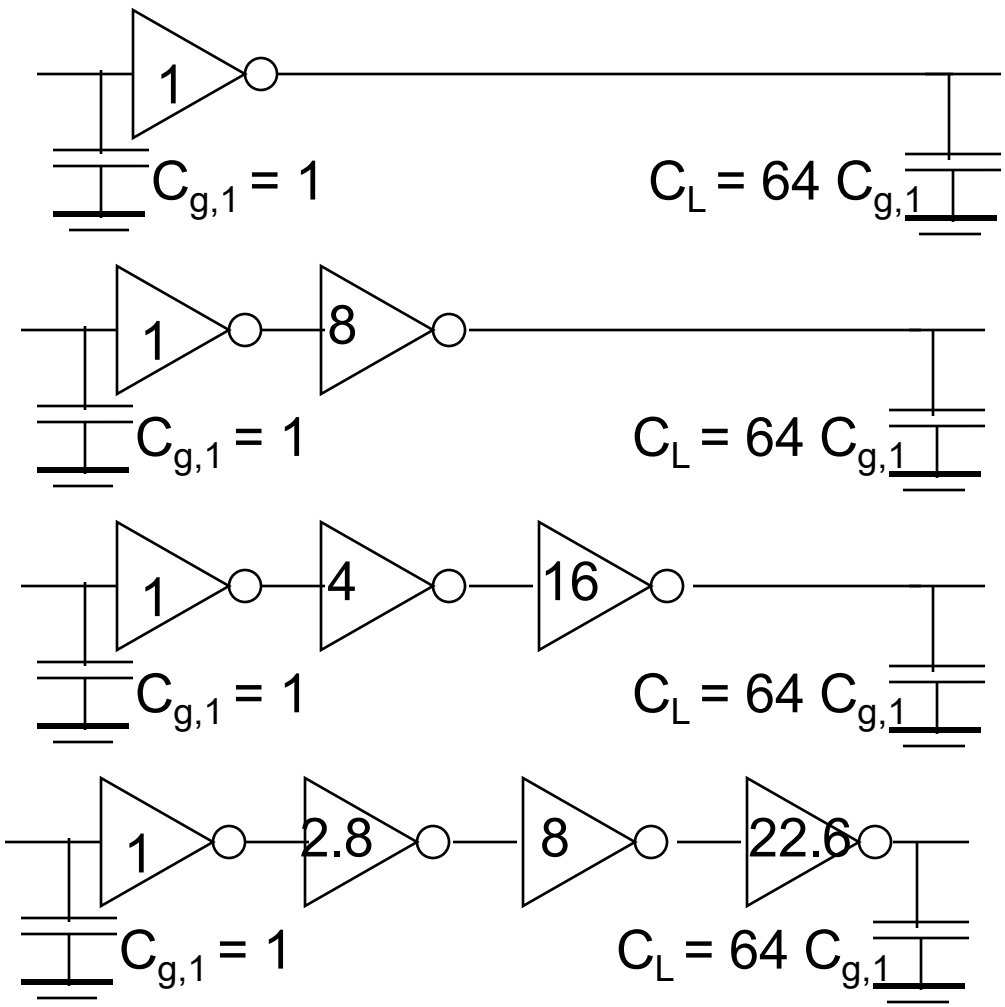

N	f	t_p
1	64	65
2	8	18
3	4	15
4	2.8	15.3

$$f = \sqrt[N]{F}$$

Example：Impact of Buffer Staging

$t_{p,opt}/t_{p0}$

F (γ = 1)	Unbuffered	Two Stage Chain	Opt. Inverter Chain
10	11	8.3	8.3
100	101	22	16.5
1,000	1001	65	24.8
10,000	10,001	202	33.1

$$t_p = N t_{p0}\left(1 + \sqrt[N]{F} / \gamma\right)$$

When driving very large C_L, the impressive speed-up obtained with cascaded inverters.

Input Signal Rise/Fall Time

- In reality, the input signal changes gradually (and both PMOS and NMOS conduct for a brief time). This affects the current available for charging/discharging C_L and impacts propagation delay.

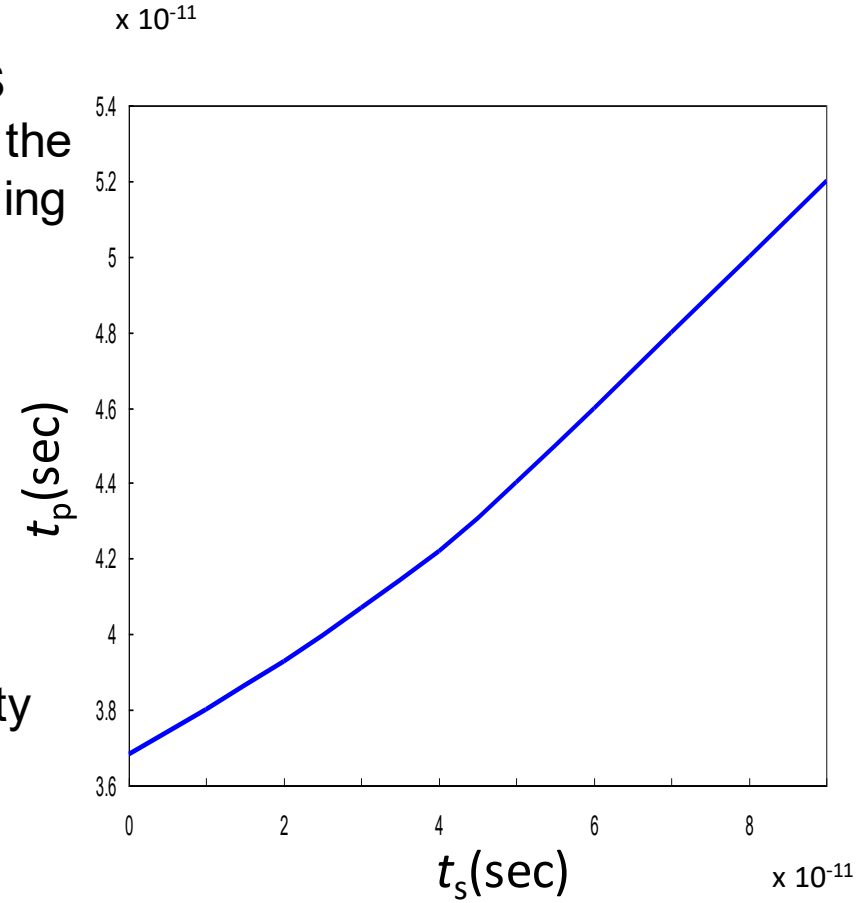

for a minimum-size inverter with a fan-out of a single gate

- t_p increases linearly with increasing input slope, t_s, once $t_s > t_p$
- t_s is due to the limited driving capability of the preceding gate

$$t_p^i = t_{step}^i + \eta t_{step}^{i-1}$$

Design Challenge

- Keep signal rise times smaller than or equal to the gate propagation delays.
  - Good for performance
  - Good for power consumption
- **Keep rise and fall times of the signals small and of approximately equal values is one of the major challenges in high-performance designs - slope engineering.**

Delay with Long Interconnects

- When gates are farther apart, wire capacitance and resistance can no longer be ignored.

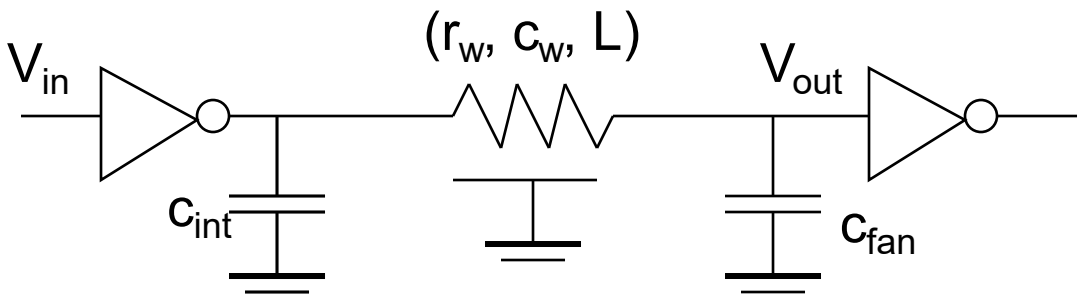

$$t_p = 0.69R_{dr}C_{int} + (0.69R_{dr}+0.38R_w)C_w + 0.69(R_{dr}+R_w)C_{fan}$$

$$= 0.69R_{dr}(C_{int}+C_{fan}) + 0.69(R_{dr}c_w+r_wC_{fan})L + 0.38r_wc_wL^2$$

where $R_{dr} = (R_{eqn} + R_{eqp})/2$

Wire delay rapidly becomes the dominate factor (due to the quadratic term) in the delay budget for longer wires.

Outline

- Inverter Basic Characteristics
- Static Behavior
- Dynamic Behavior
- Power, Energy
  - Dynamic Power Consumption
  - Static Consumption

Where Does Power Go?

- Dynamic Power: $P_{dynamic} = P_{switching} + P_{shortcircuit}$
  - Charging and Discharging Capacitors
  - Short Circuit Currents：Short Circuit Path between Supply Rails during Switching
- Static Power: $P_{static} = (I_{sub} + I_{junct} + I_{gate})V_{DD}$
  - Leakage Static Consumption：OFF devices

    Subthreshold Leakage

    Junction Leakage

    Gate Leakage

Dynamic Power Consumption

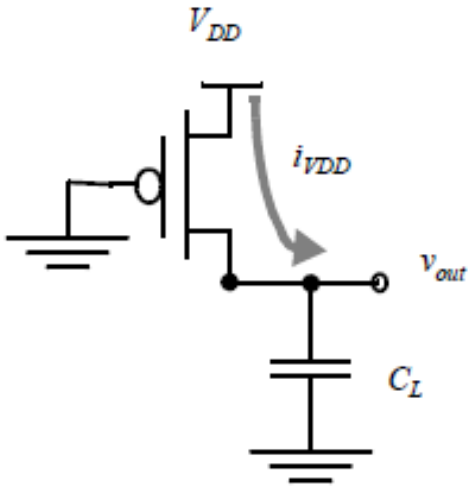

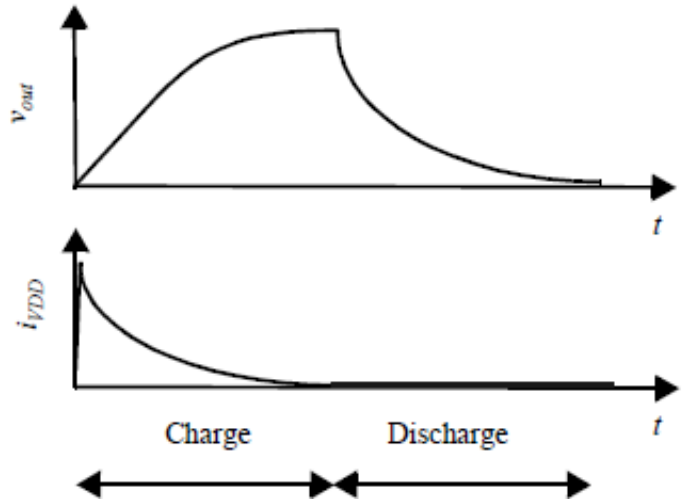

- When the gate output rises

$$E_{VDD} = \int_0^{\infty} i_{VDD} V_{DD} dt = \ldots = C_L V_{DD}^{\ 2}$$

taken from the supply during the transition.

$$E_C = \int_0^{\infty} i_{VDD} V_{out} dt = \ldots = C_L V_{DD}^{\ 2} / 2$$

stored on the capacitor at the end of the transition

Half the energy from V_{DD} is dissipated in the PMOS transistor as heat, other half stored in capacitor

- When the gate output falls
  - -- Energy in capacitor is dumped to GND
  - -- Dissipated as heat in the nMOS transistor

Switching Waveforms

- Example: V_{DD} = 1.0 V, C_L = 150 fF, f = 1 GHz

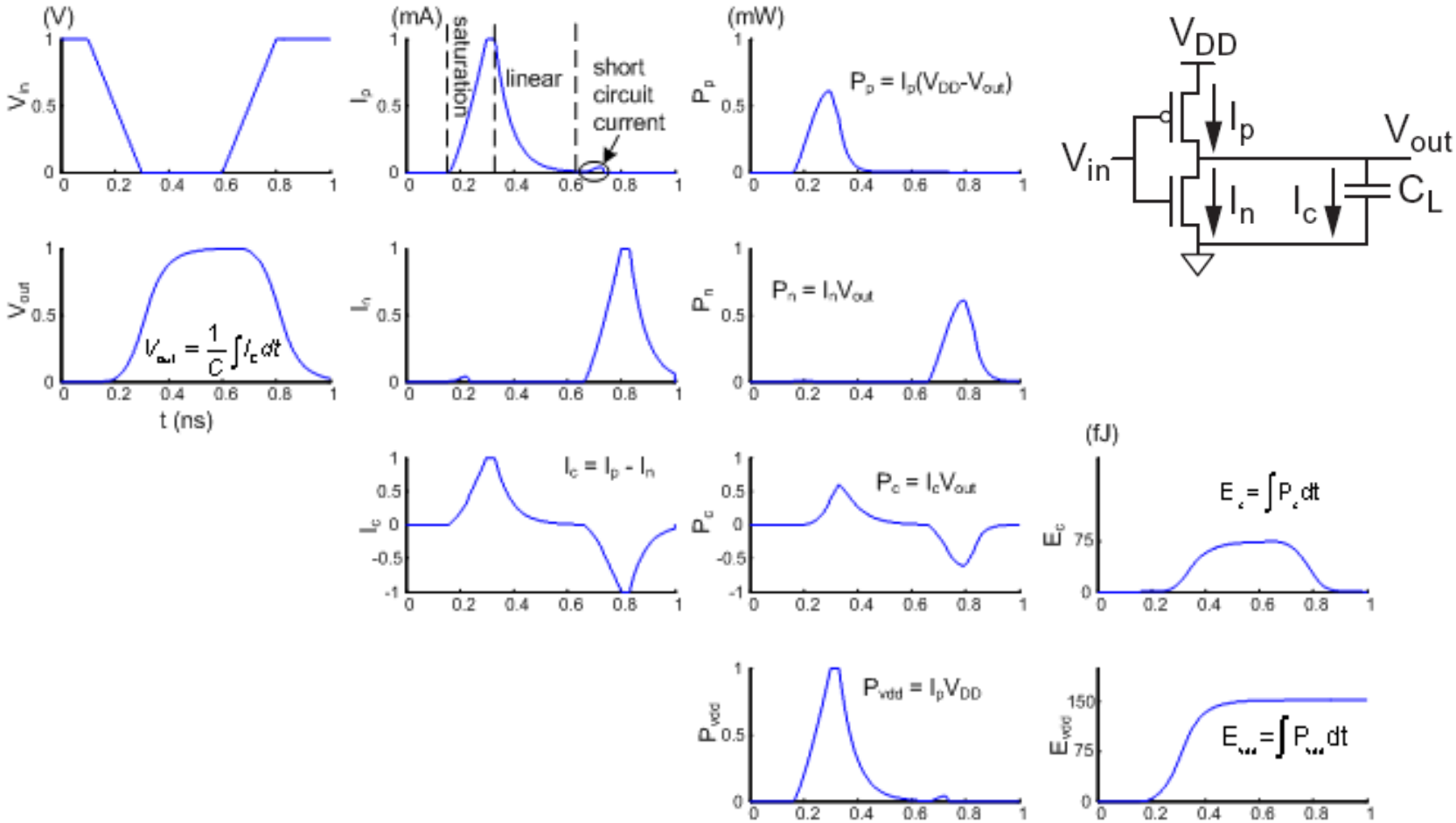

Switching Power and Activity Factor

$$P_{\text{switching}} = \frac{1}{T}\int_0^T i_{DD}(t)V_{DD}dt = \frac{V_{DD}}{T}\int_0^T i_{DD}(t)dt = \frac{V_{DD}}{T}\left[Tf_{\text{sw}}CV_{DD}\right]$$

$$= CV_{DD}{}^2 f_{\text{sw}}$$

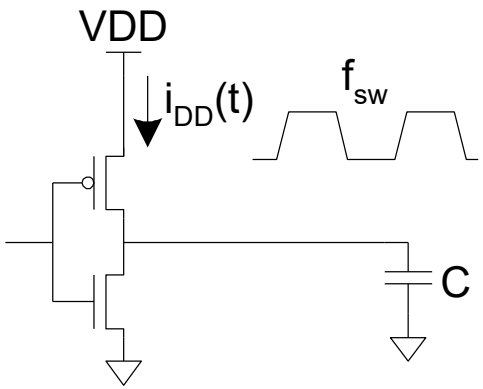

Suppose the system clock frequency = f, $f_{sw} = \alpha f$ (a = activity factor)

If the signal is a clock, a = 1

If the signal switches once per cycle, a = ½

$$P_{\text{switching}} = \alpha CV_{DD}{}^2 f$$

$$P_{dyn} = C_L V_{DD}{}^2 f_{0->1}$$

Switching activity开关活动性

the power consumption as the gate is switched on and off times per second

Switching Power

Capacitance: function of fanout, wire length, transistor sizes

Supply voltage: scaling with generations

$$P_{\text{switching}} = \alpha C V_{DD}^{2} f$$

Activity factor: how often on average wires switch

Clock frequency: scaling with generations

Dissipation Due to Direct-Path Currents

- In actual designs, the assumption of the zero rise and fall times of the input wave forms is not correct.
- The finite slope of the input signal causes a direct current path between VDD and GND for a short period of time during switching, while the NMOS and PMOS are conducting simultaneously.
  - Leads to a blip of "short circuit" current.

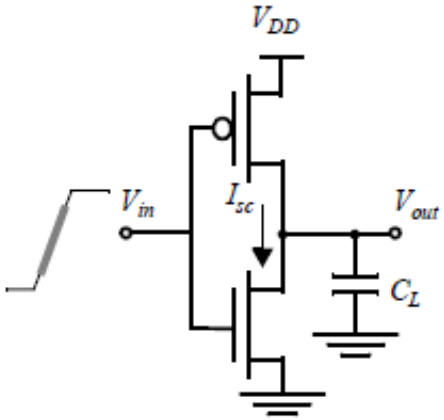

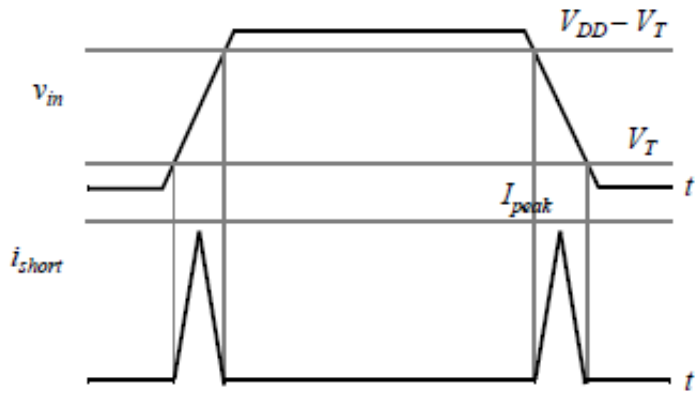

$$E_{dp} = t_{sc} V_{DD} I_{peak}$$

$$P_{dp} = t_{sc} V_{DD} I_{peak} f = C_{sc} V_{DD}^{2} f$$

$$t_{sc} = \frac{V_{DD} - 2V_T}{V_{DD}} t_s$$

Short Circuit Currents

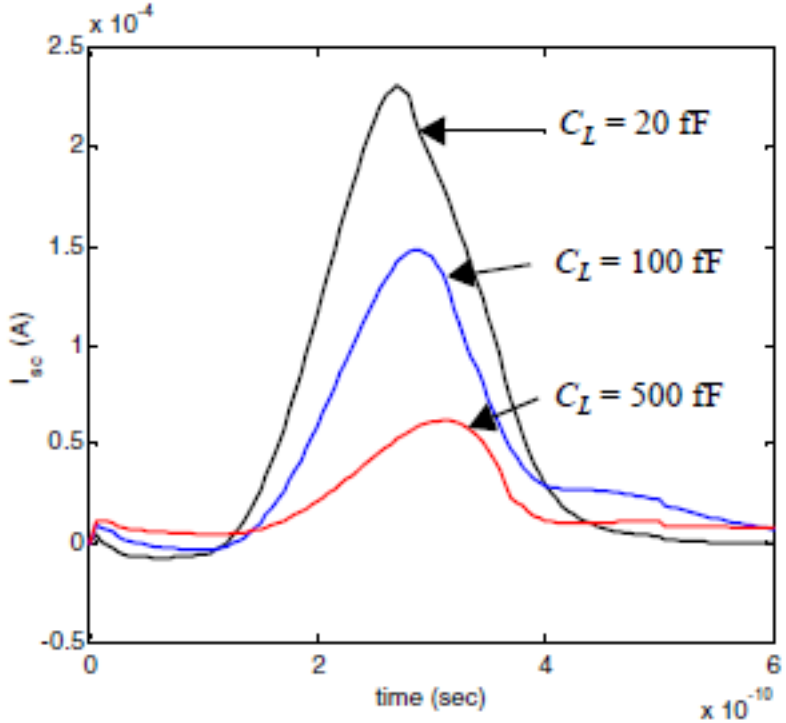

I_{peak} depends on the saturation current of P/N MOS and the ration between input and output slopes (C_L)

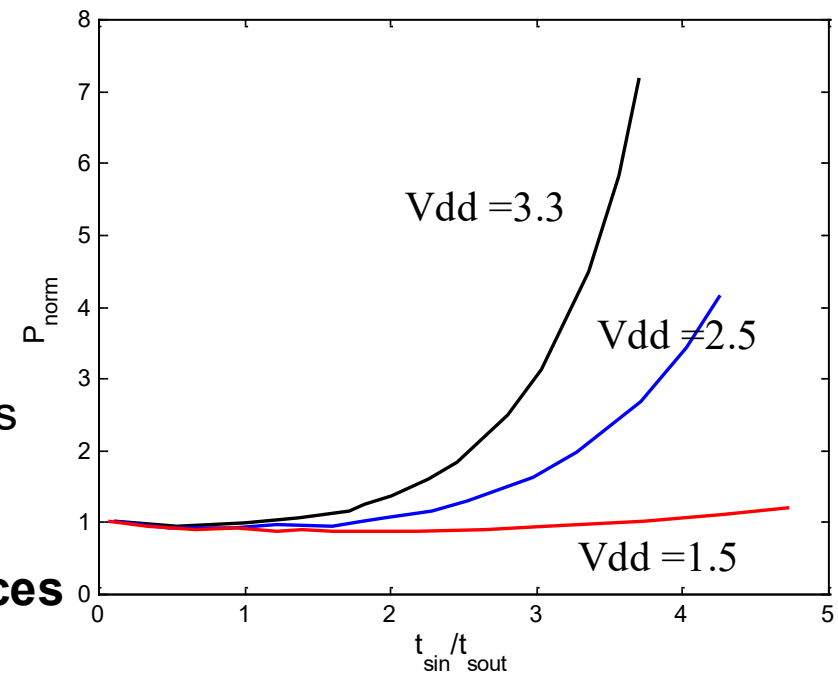

- Keep the input and output rise/fall times the same
- **If Vdd < Vtn + |Vtp|, the short circuit power is eliminated since both devices are never on at the same time**

Dynamic Power Example

- 1 billion transistor chip
  - 50M logic transistors
    - Average width: 12 λ
    - Activity factor = 0.1
  - 950M memory transistors
    - Average width: 4 λ
    - Activity factor = 0.02
  - 1.0 V 65 nm process (with 50 nm drawn channel lengths and λ= 25 nm)
  - C = 1 fF/mm (gate) + 0.8 fF/mm (diffusion)
- Estimate dynamic power consumption @ 1 GHz. Neglect wire capacitance and short-circuit current.

$$C_{\text{logic}} = \left(50\times10^{6}\right)\left(12\lambda\right)\left(0.025\mu m/\lambda\right)\left(1.8fF/\mu m\right) = 27\text{ nF}$$

$$C_{\text{mem}} = \left(950\times10^{6}\right)\left(4\lambda\right)\left(0.025\mu m/\lambda\right)\left(1.8fF/\mu m\right) = 171\text{ nF}$$

$$P_{\text{dynamic}} = \left[0.1C_{\text{logic}} + 0.02C_{\text{mem}}\right]\left(1.0\right)^{2}\left(1.0\text{ GHz}\right) = 6.1\text{ W}$$

Static Consumption

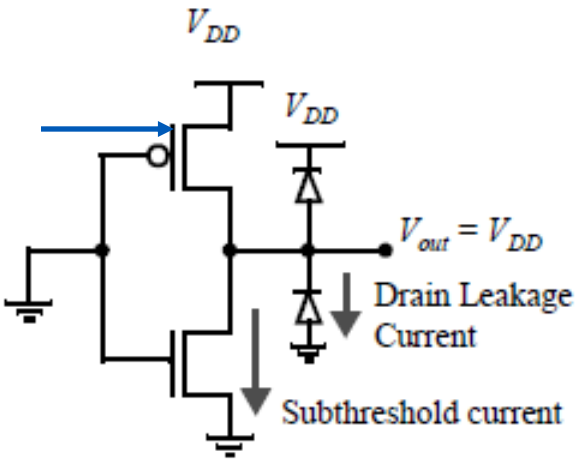

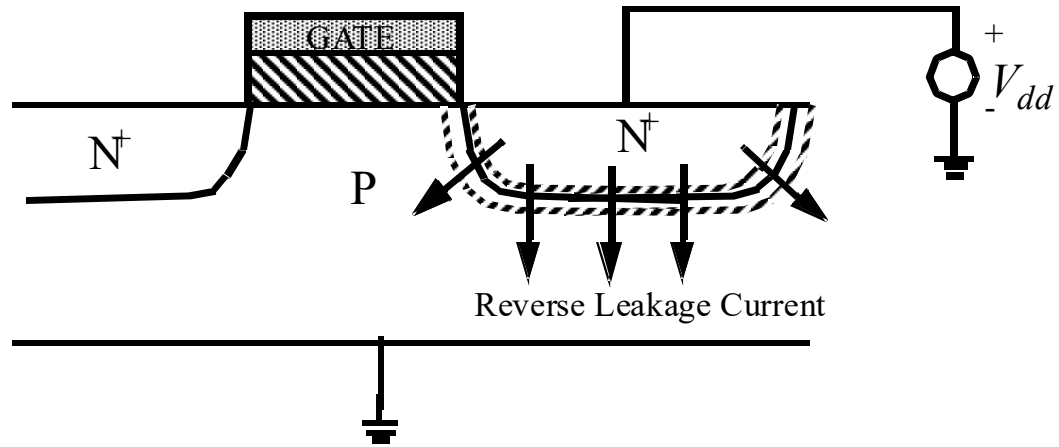

Sub-threshold current one of most compelling issues in low-energy circuit design!

Typical values in 65 nm
I_{off} = 100 nA/μm @ V_t = 0.3 V
I_{off} = 10 nA/μm @ V_t = 0.4 V
I_{off} = 1 nA/μm @ V_t = 0.5 V
η = 0.1 k_γ = 0.1
S = 100 mV/decade

Tunneling leakage from reverse-biased p-n junctions
-- Between diffusion and substrate or well

Static Consumption

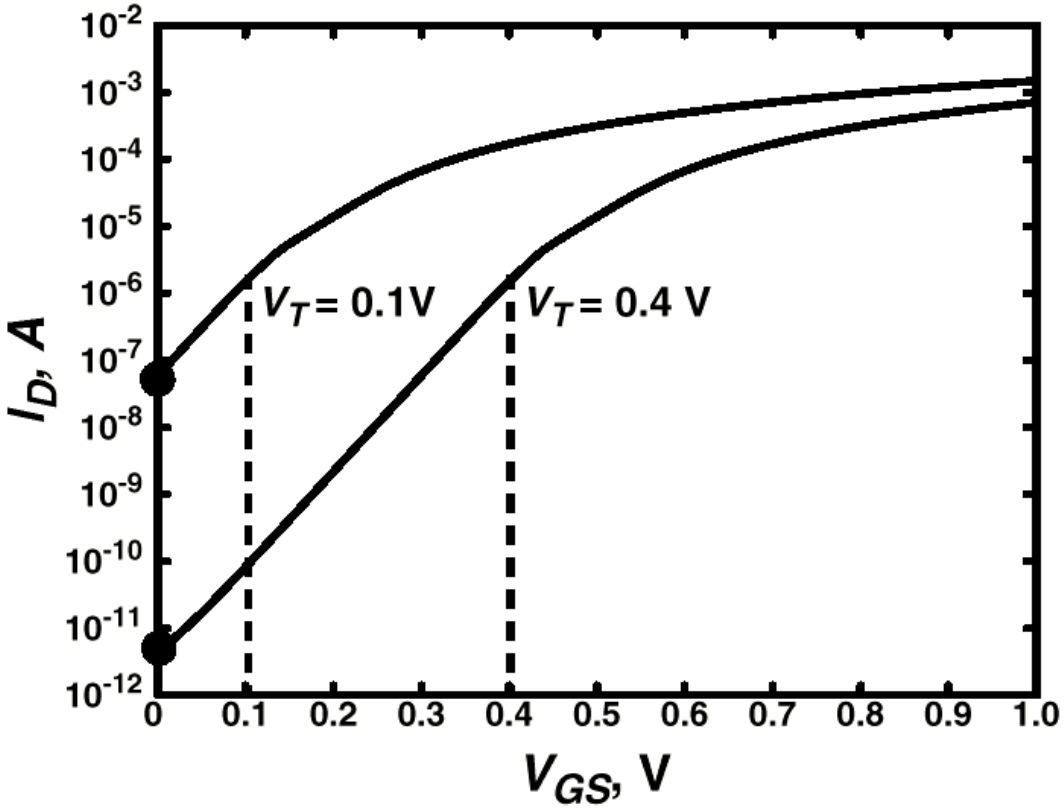

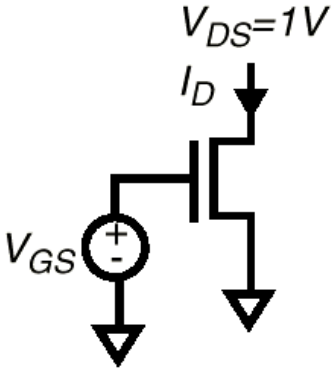

Leakage control is critical for low-voltage operation

Leakage Dependence on Vt

TSMC Processes Leakage and Vt

	CL018 G	CL018 LP	CL018 ULP	CL018 HS	CL015 HS	CL013 HS
V_{dd}	1.8 V	1.8 V	1.8 V	2 V	1.5 V	1.2 V
T_{ox} (effective)	42 Å	42 Å	42 Å	42 Å	29 Å	24 Å
L_{gate}	0.16 µm	0.16 µm	0.18 µm	0.13 µm	0.11 µm	0.08 µm
I_{DSat} (n/p) (µA/µm)	600/260	500/180	320/130	780/360	860/370	920/400
I_{off} (leakage) (pA/µm)	20	1.60	0.15	300	1,800	13,000
V_{Tn}	0.42 V	0.63 V	0.73 V	0.40 V	0.29 V	0.25 V
FET Perf. (GHz)	30	22	14	43	52	80

Exponential dependence

Leakage Dependence on Temperature

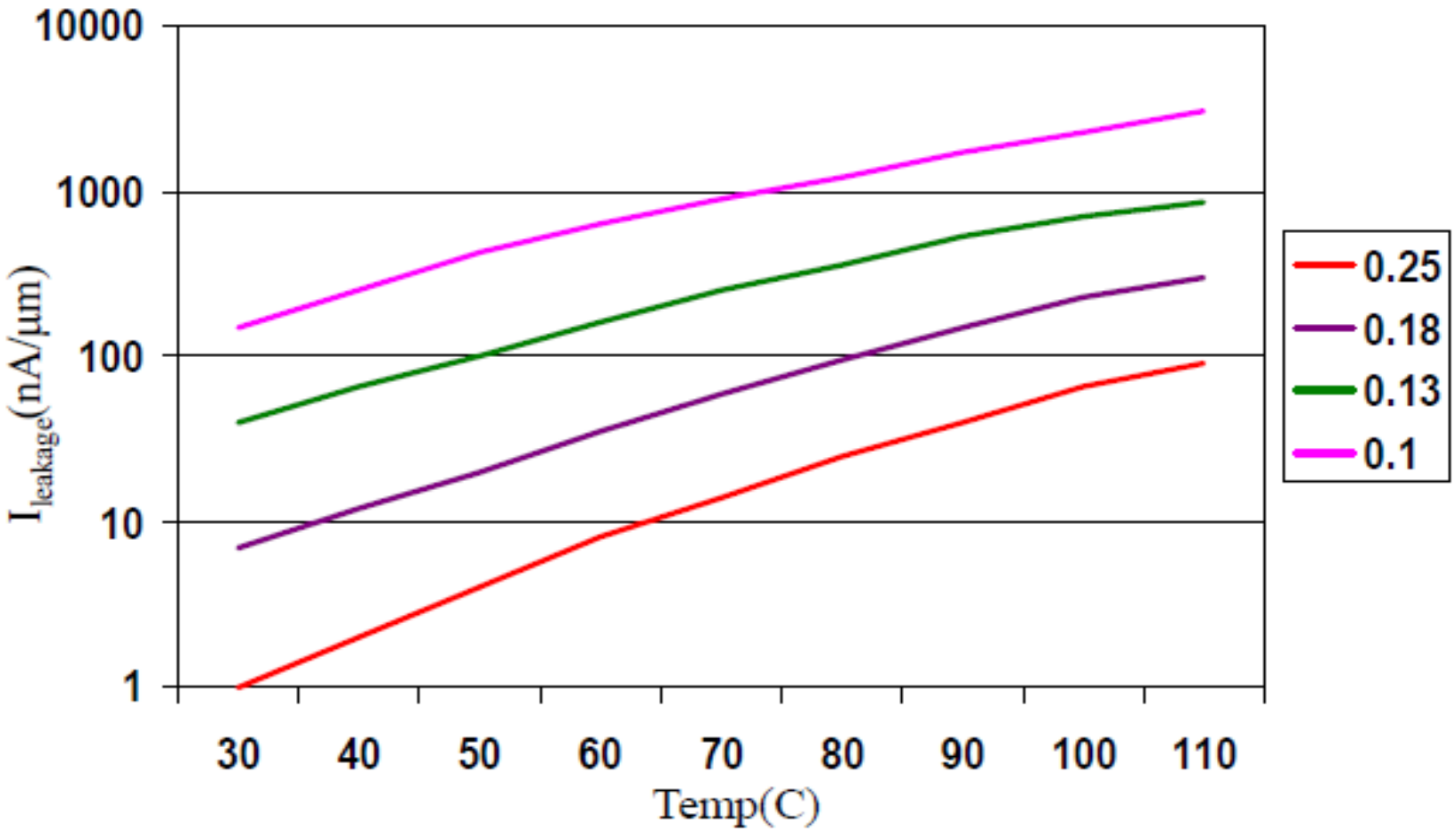

Source: D. Borkar, Intel

Putting it all together

$$P_{total} = P_{dyn} + P_{dp} + P_{stat}$$

$$= (C_L V_{DD}^{\ 2} + V_{DD} I_{peak} t_s) f_{0->1} + V_{DD} I_{leak}$$

become more and more important

the dominant factor

can be kept within bounds
by careful design

Summary

- Inverter Basic Characteristics
- Static Behavior
  - Voltage transfer Characteristics
  - Switching threshold
- Dynamic Behavior
  - Propagation Delay: First-order Analysis
  - Propagation Delay from Perspective
- Power, Energy

集成电路原理与设计

反相器

谭志超
zhichaotan@zju.edu.cn

Optimal sizing

- Use a chain of inverters, each stage has transistors a larger than previous stage.
- Minimize total delay through driver chain:
  - $t_{tot} = n(C_{big}/C_g)^{1/n}\, t_{min}$.
- Optimal number of stages:
  - $n_{opt} = \ln(C_{big}/C_g)$.
- Driver sizes are exponentially tapered with size ratio a.
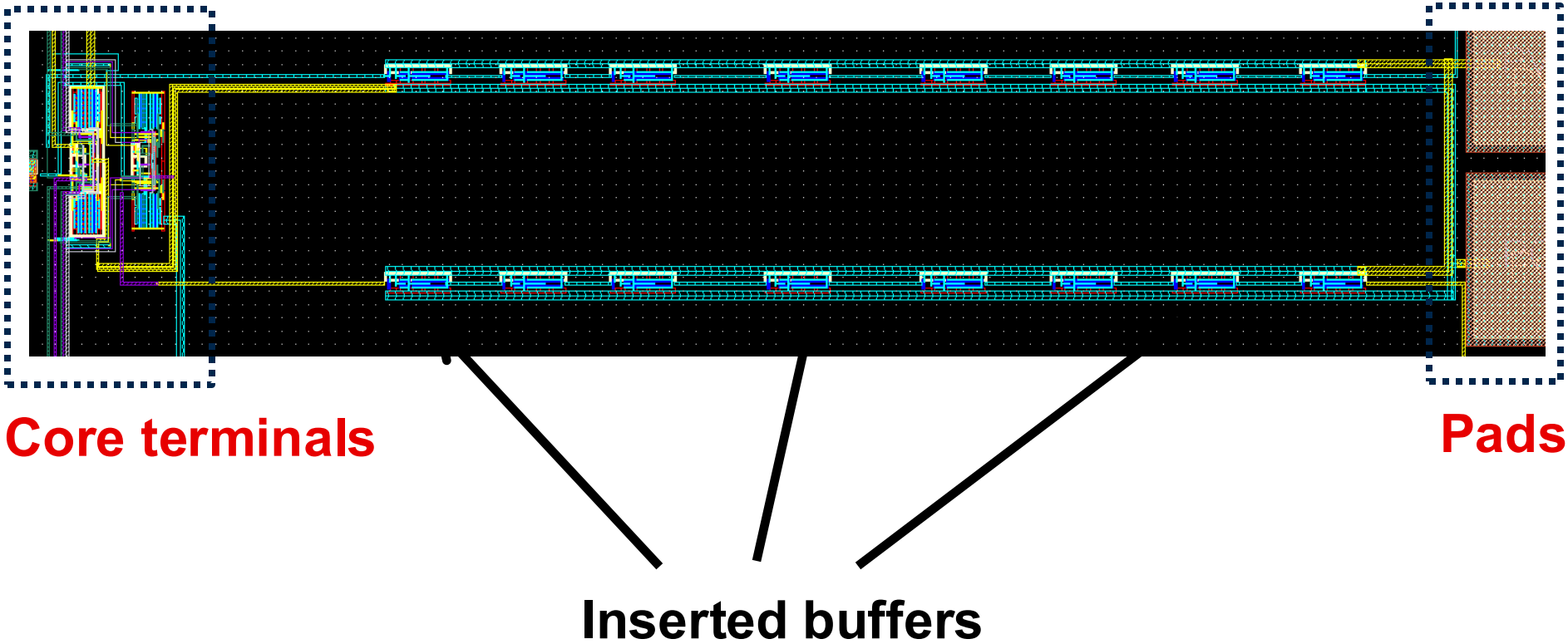
Layout example of buffers insertion