Review for the Final Test

29, 12, 2025

Analog and Digital IC Design

- **Analog vs Digital in Technology, Devices (Passive and Active)**
- **Analog Blocks (mirror, BGR, single-transistor CS, CG and CD)**
- **Analog Sub-systems (differential amplifiers, operational amplifiers)**
- **Digital circuits (Power, delay, CMOS/TG logic, Latches&Triggers)**

Review 1 Technology & Device

- **Technology scaling down (digital driven) with Moore's Law**

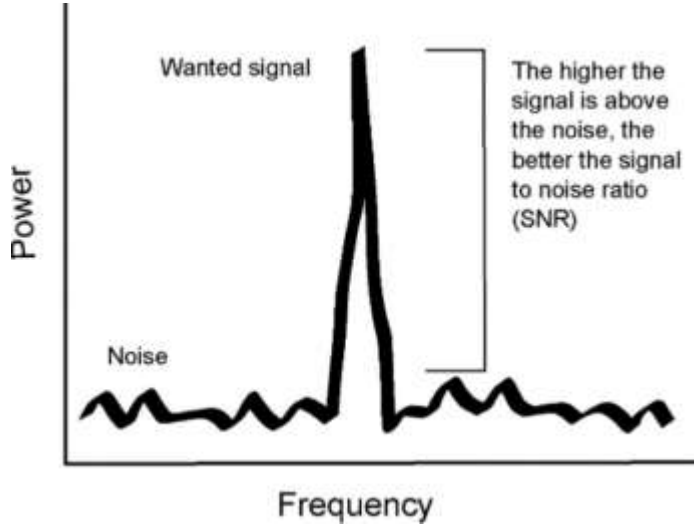

Analog circuits like Amplifiers, ADCs and RF circuits are ***SNR*** limited:

Signal -> Supply Vdd
Noise -> Current (4kT/gm)

Power = ***V*** x ***I*** stays the same for advance technology node (**becomes more**)
Power savings are from architecture innovation etc.

Review 1 Technology & Device

- **More SoC, SiP and Chiplets**

  (not always implemented in the same process node)

  DTCO – Design-Technology Co-Optimization

  STCO – System-Technology Co-Optimization

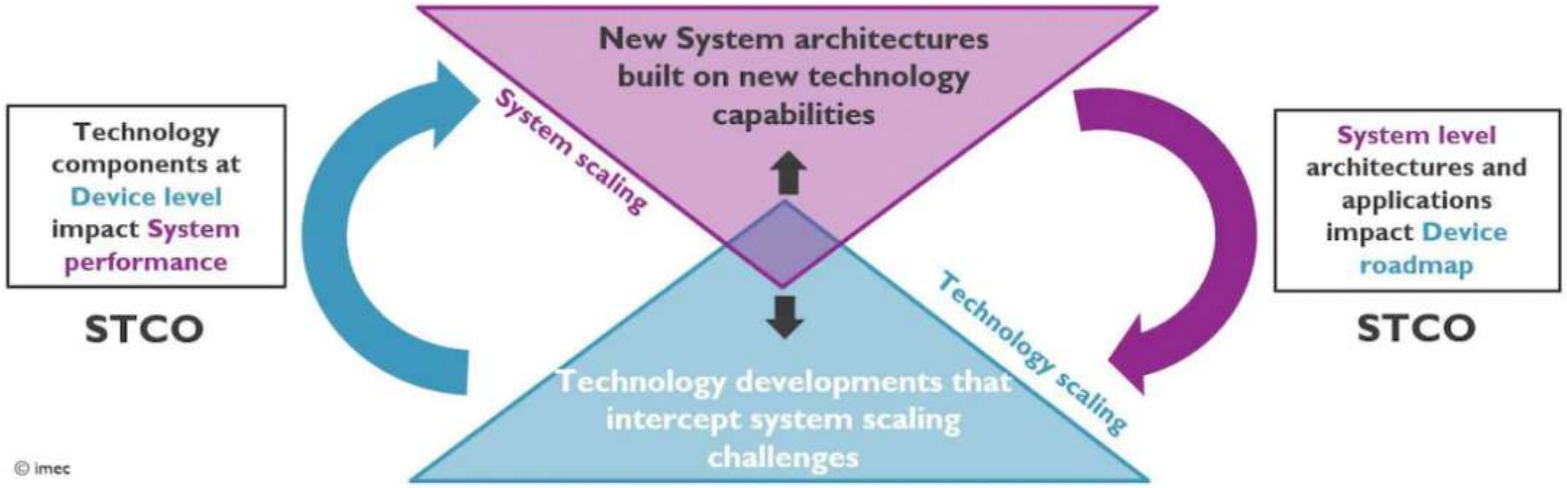

Review 1 Technology&Device

- Analog Design Flow

Transistor Level, handcrafted

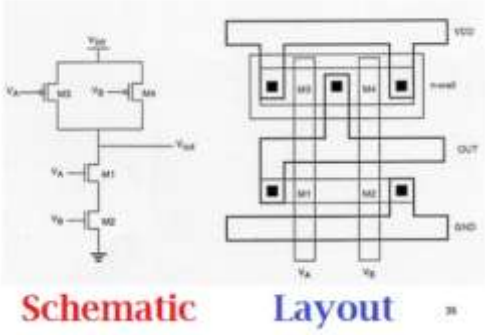

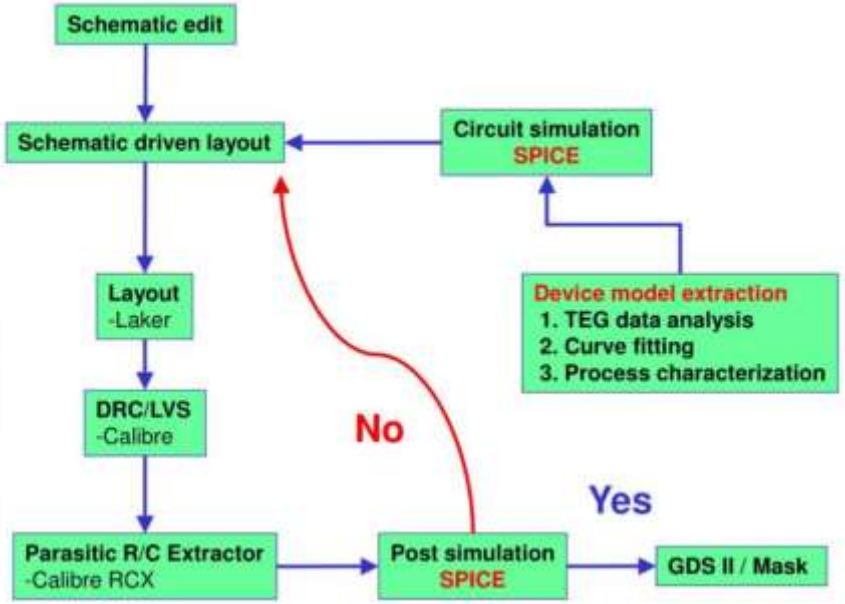

Frontend and Backend **W/L ratio is the key**

- Digital Design Flow

(Behavior - RTL –Transistor - Layout)

Code -> Blocks/Gates -> **Standard Cells** -> Layout

Review 1 Technology & Device

- **I/V curve and operation region of MOSFET**
- **Diode and its Capacitance (C ~ -V_{PN})**
- **Body Effect (change of Vth)**

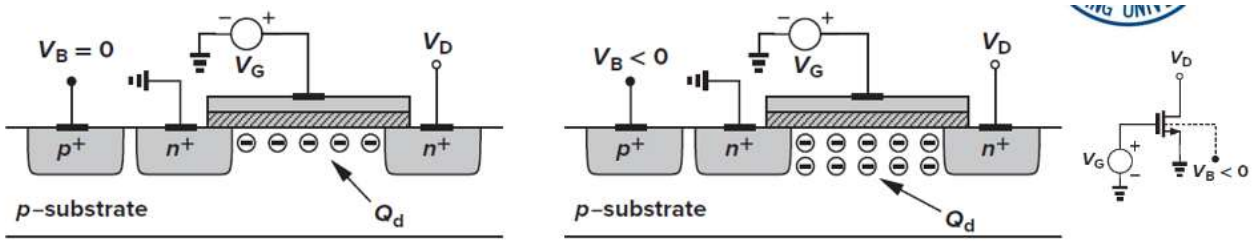

$$V_{TH} = \Phi_{MS} + 2\Phi_F + \frac{Q_{dep}}{C_{ox}}$$

$$\boxed{V_{TH} = V_{TH0} + \gamma\left(\sqrt{|2\Phi_F + V_{SB}|} - \sqrt{|2\Phi_F|}\right)}$$

背栅效应是指衬底电势的变化会影响沟道电势，从而影响漏源电流。这个效应可以等效为晶体管阈值电压 V_t 的改变。直观的理解是，衬底相当于背面的栅极，也会如栅极一样通过电容效应控制沟道。如图 1-18 所示，正的源极-衬底电压 V_{SB} 使得源极的耗尽区扩大。增大的耗尽区负电荷“排斥”电子，因此需要更大的 V_{GS} 才能在沟道形成反型层，这等效于阈值电压 V_t 增大了。

Review 1 Technology & Device

- **Channel length modulation (vs. *I*d, *L*) -> Early Voltage**

- **Short channel effect/Weak Inversion (X)**

Review 1 Technology & Device

- Some Recurring Process Steps： Oxidation, Diffusion, Ion implantation, Deposition, Etching， Planarization (Photolithography)

- DRC, LVS, Layout -> Matching (unit cells)

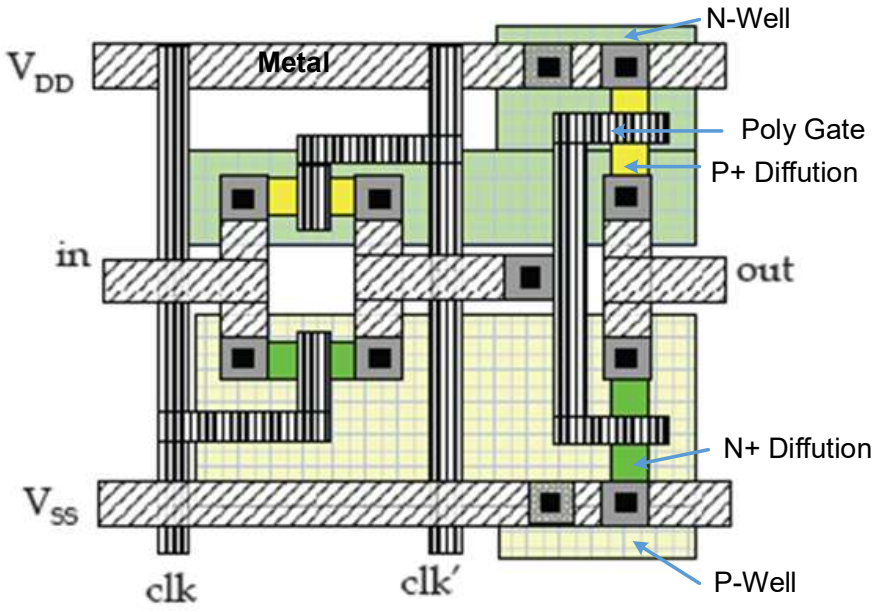

Review 2/3 Analog Circuits

- **Switch (diode region and equation)**

- **Diode-connected transistor (saturation)**

- **Current mirror -> Cascode (r_o = ?) -> r_o > R (passive) > $1/g_m$**

- **Low voltage current mirror (1/4 W/L etc.)**

Review 2/3 Analog Circuits

- **Voltage reference / Current reference**
- **Bandgap reference (ZTC = PTAT+CTAT)**

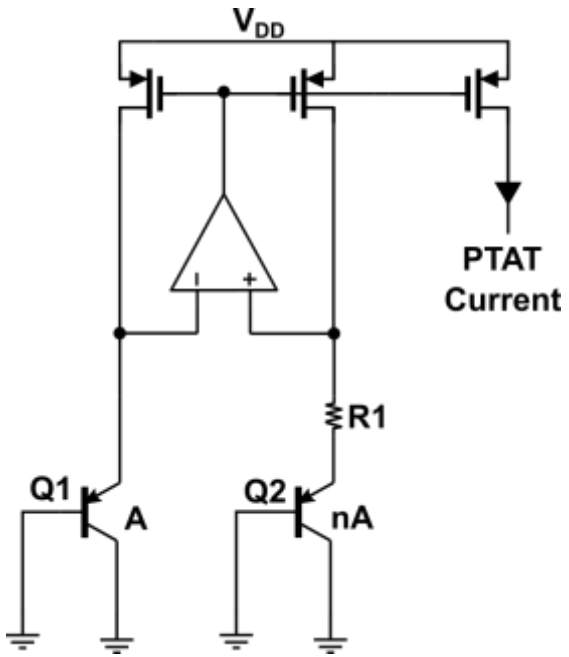

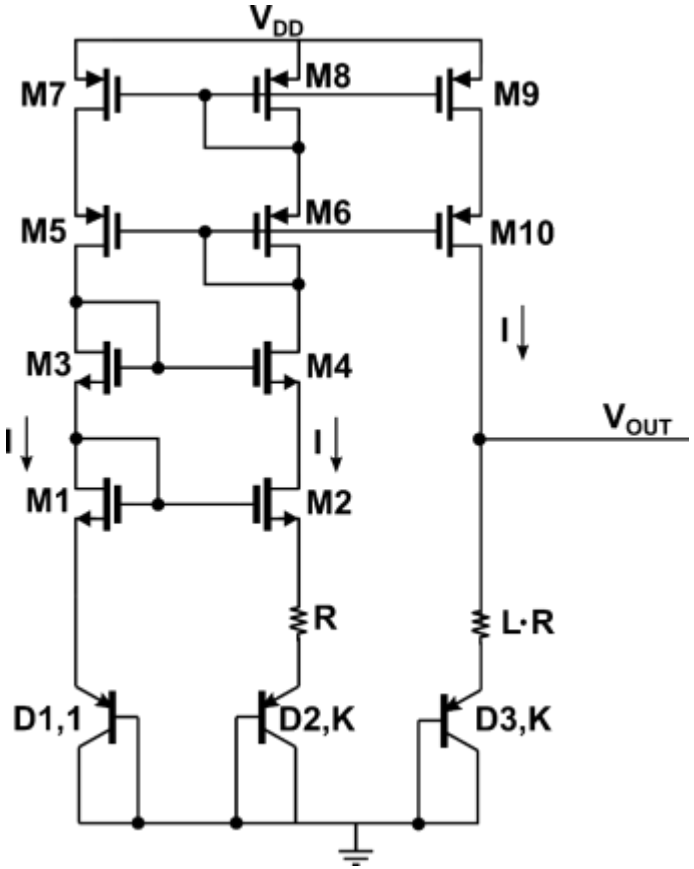

Review 2/3 Analog Circuits

- **Common-Source Stage** Inverse Gain -> I-V curve
- **Source Follower**

  Gm = gm/1+gm* R_S, *R*out： the same as Cascode
- **Common-Gate Stage**

  Current input with (1/gm) input resistance -> *I*out = *I*in

Review 2/3 Analog Circuits

- A differential signal is better w. r. t. PSRR/Interference

- **Virtual ground at node P with fixed I_{SS}**
- V_{incm} Range: $V_{GS1} + \left(V_{GS3} - V_{TH3}\right) \le V_{in,CM} \le V_{DD} - R_D \frac{I_{SS}}{2} + V_{TH3}$

- DM: $-g_m * R_{out}$ CM: $(g_m/1+g_m r_{ss}) * R_{out}$
- Concept of PSRR/CMRR

Review 4 Digital Circuits

- Power Consumption ($C \cdot V_{DD}^2$)
- Wire parasitics, Capacitance, Resistance
- Wire models(lumped, distributed) ***Elmore*** $\tau(V_{out}) = \frac{rcL^2}{2}$

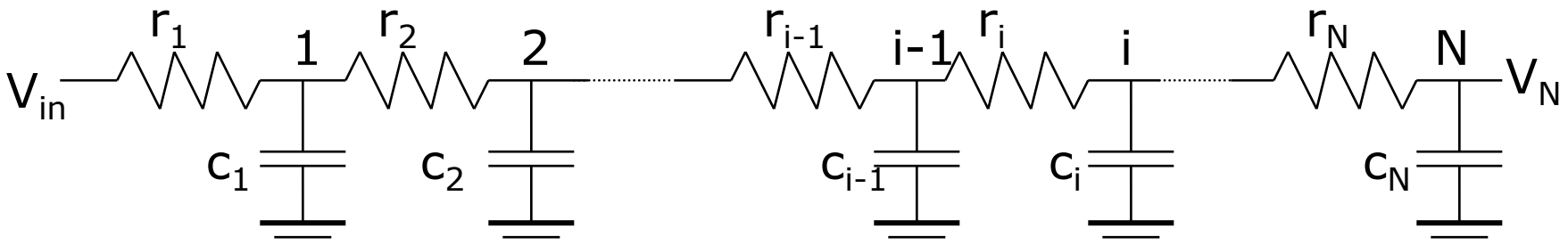

$$\tau_{Di} = c_1 r_1 + c_2(r_1 + r_2) + \ldots + c_i(r_1 + r_2 + \ldots + r_i)$$

Review 4 Digital Circuits

- Delay calculation of 3-input Nand/Nor gate

- Analysis of Inverter chain delay (N, e)

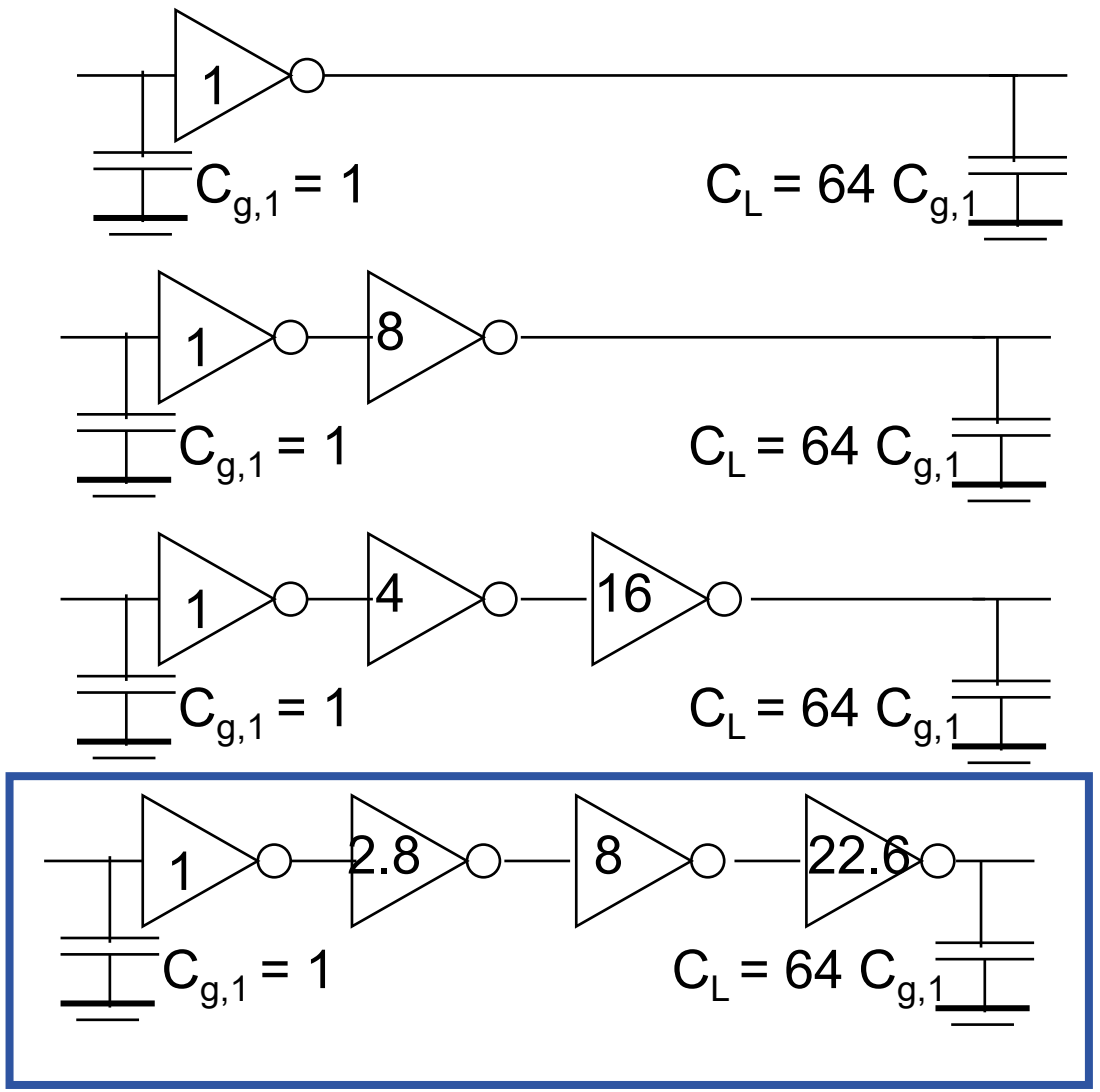

Review 4 Digital Circuits

- Inverter Basic Characteristics (V-curve)

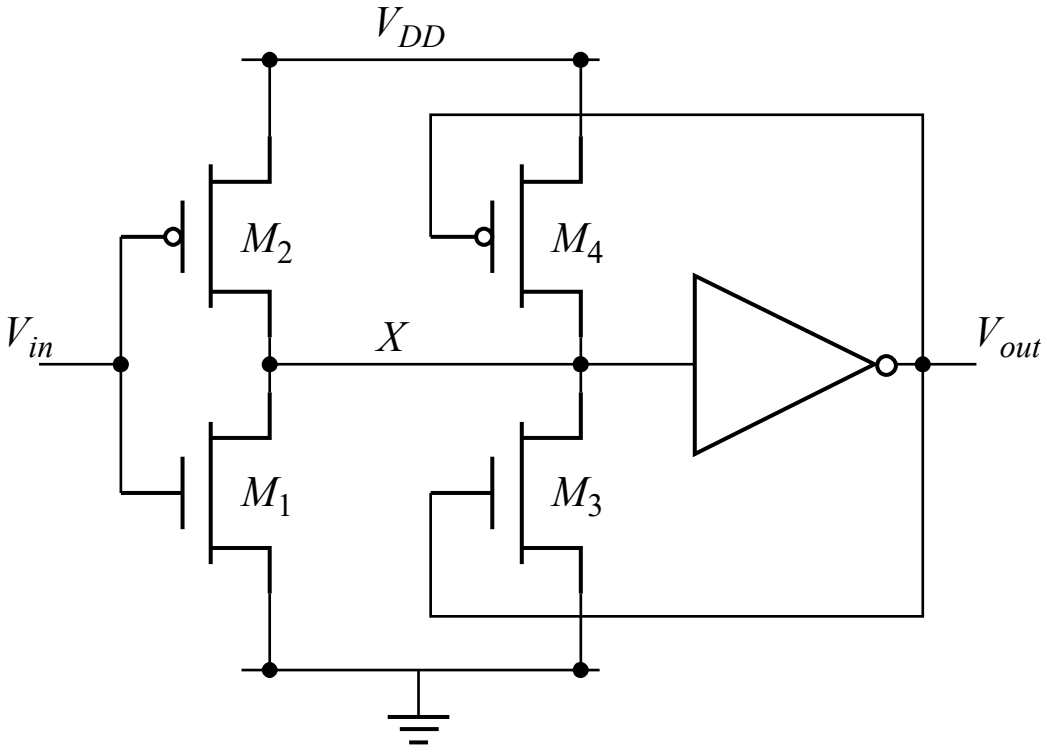

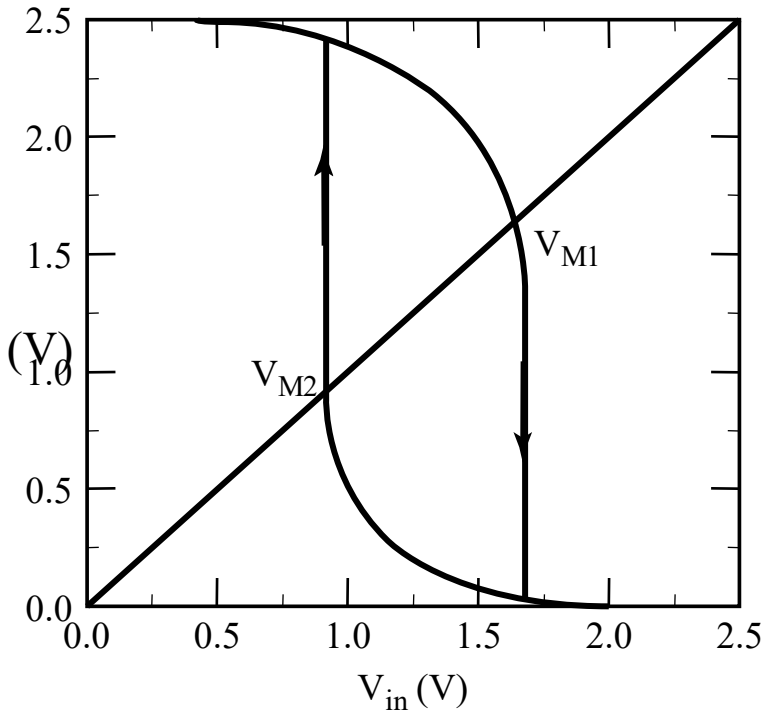

Voltage-transfer characteristics with hysteresis.

Review 4 Digital Circuits

- Combination logic from Boolean to Layout

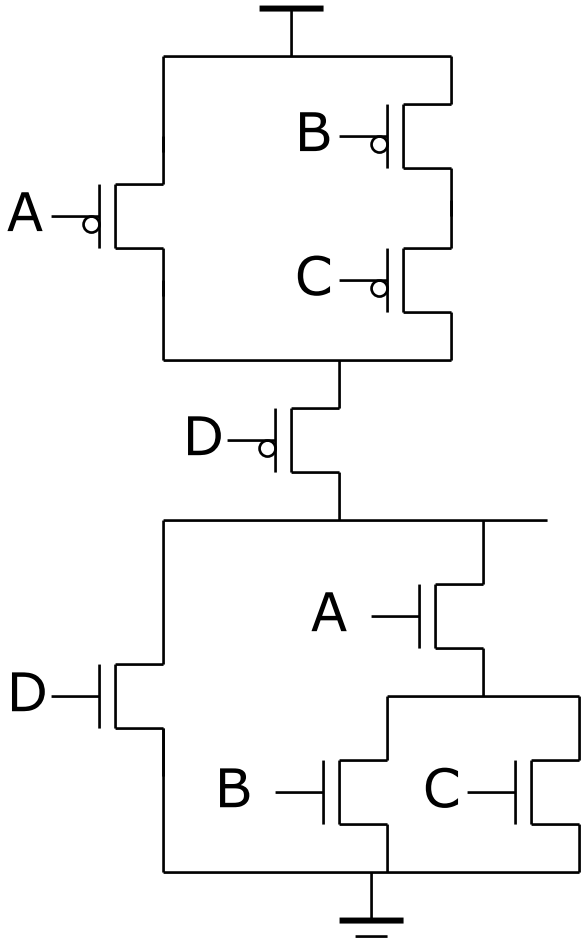

Review 4 Digital Circuits

- TG based logic and dynamic logic

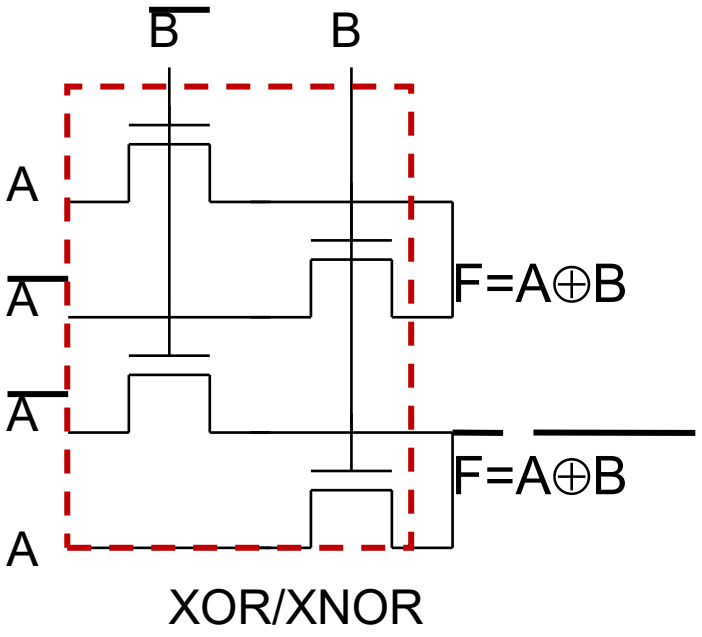

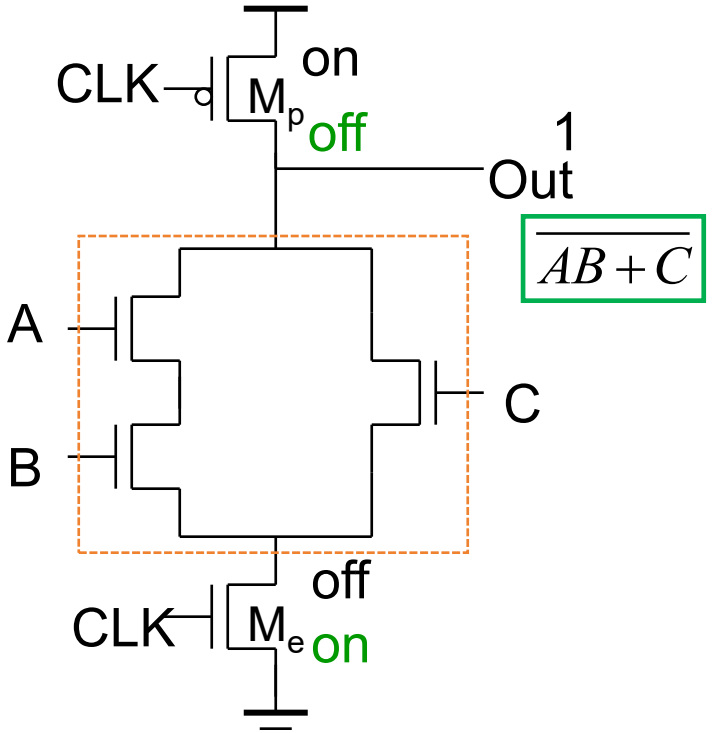

Example (1)

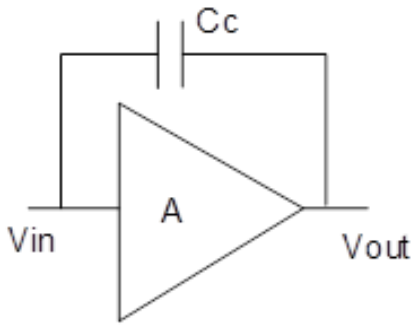

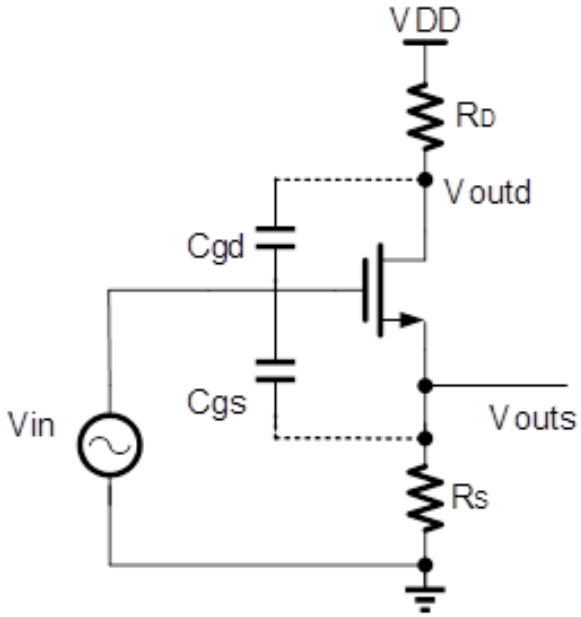

$$Z_{in} = \frac{1}{C_C S \cdot (1-A)}$$

$$A_{vs} = \frac{g_m R_s}{1 + gm \cdot R_s}$$

$$Z_{in} = \frac{1}{C_{gs} S \cdot \left(1 - \frac{g_m R_s}{1 + gm \cdot R_s}\right)}$$

Cancel The Miller Capacitor

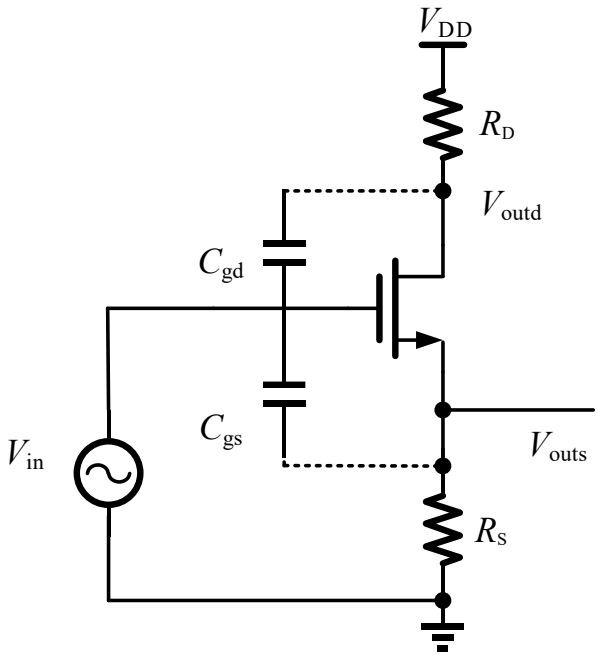

$$A_{vd} = -\frac{g_m \cdot R_D}{1 + gm \cdot R_S} \approx -\frac{R_D}{R_S}$$

$$Z_{in} = \frac{1}{C_{gd}s \cdot \left(1 + \frac{R_D}{R_S}\right)}$$

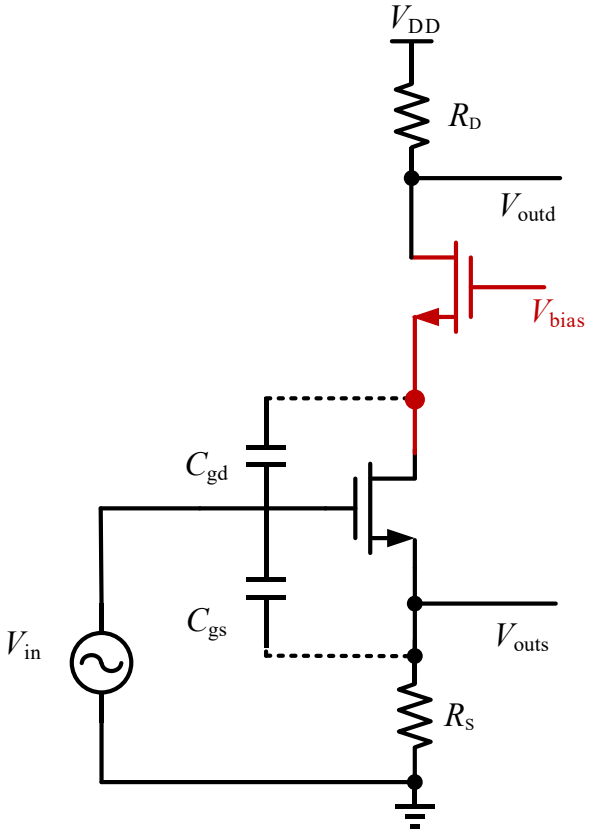

$$Z_{in} = \frac{1}{C_{gd}s}$$

Example (2)

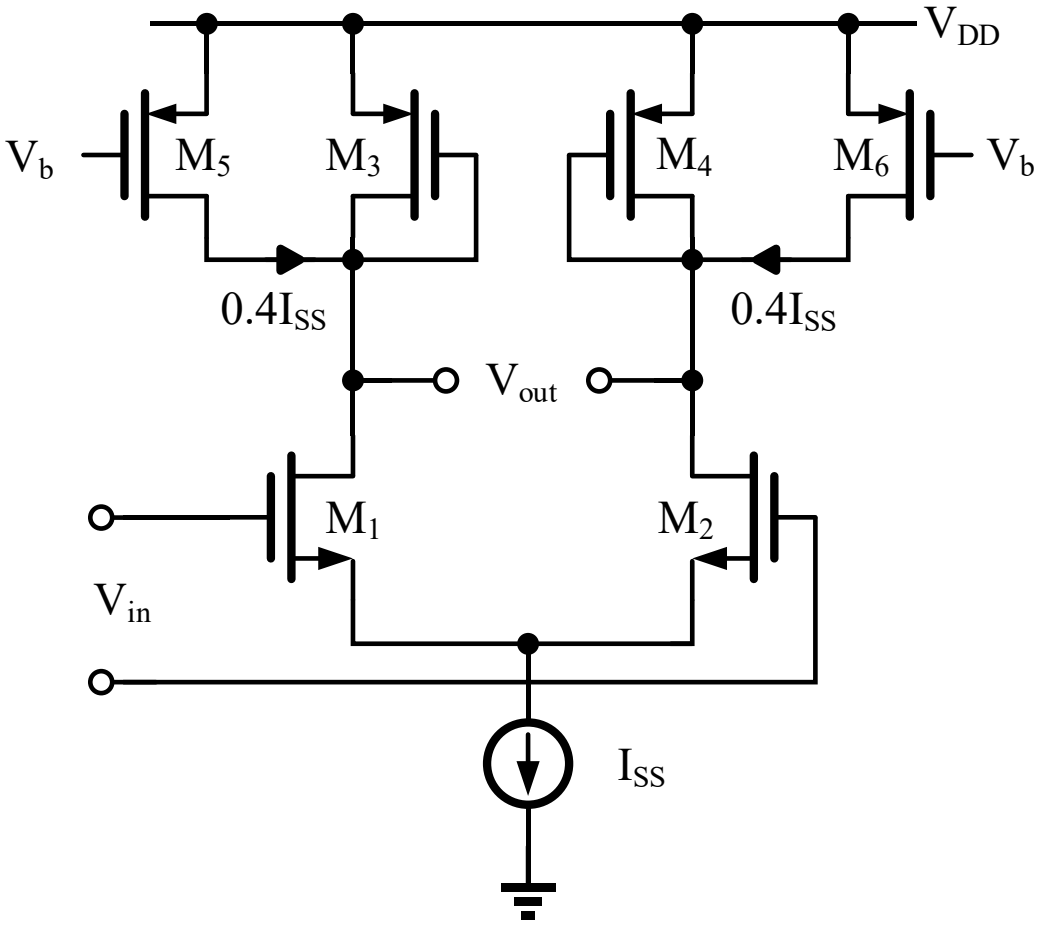

Example (2)

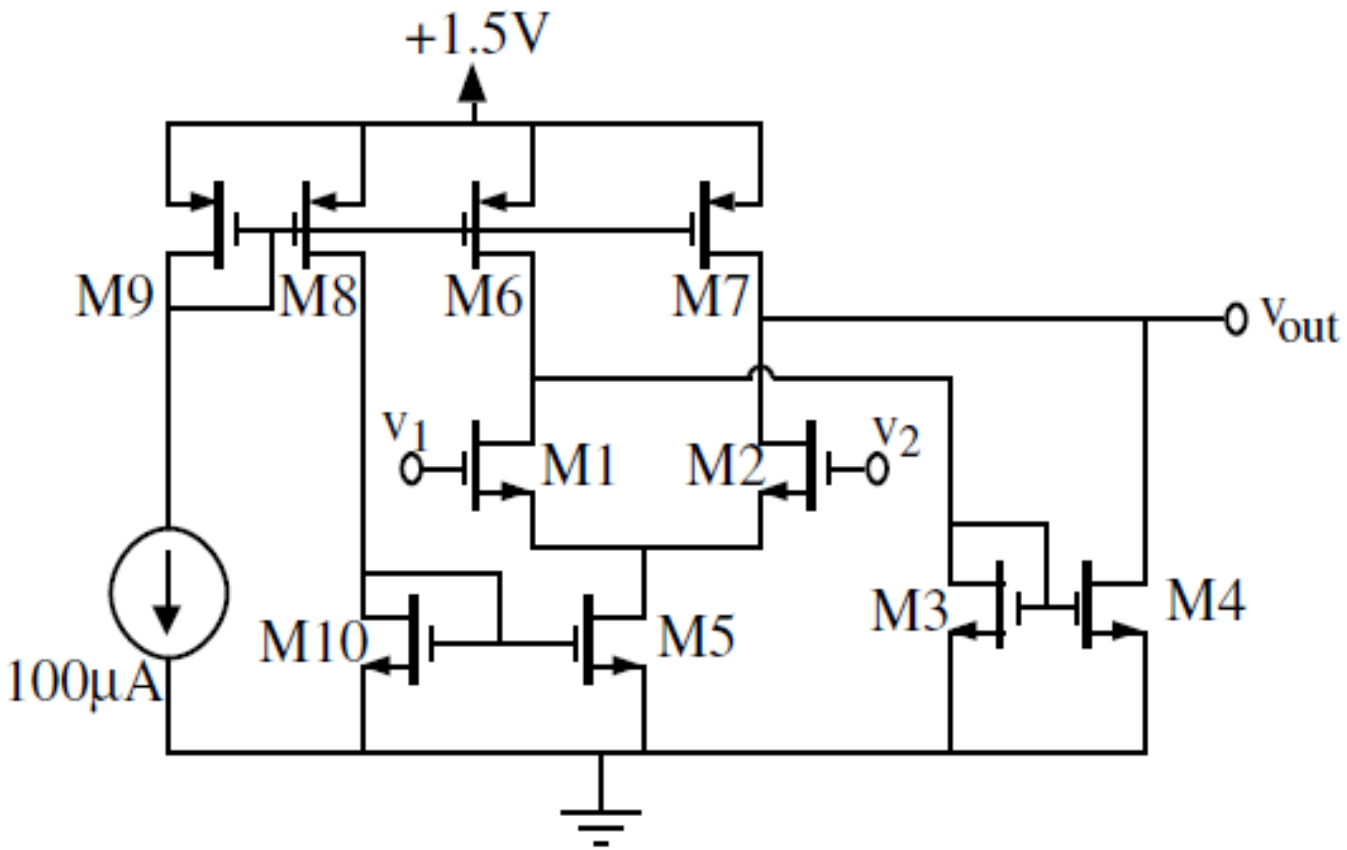

Example (2)

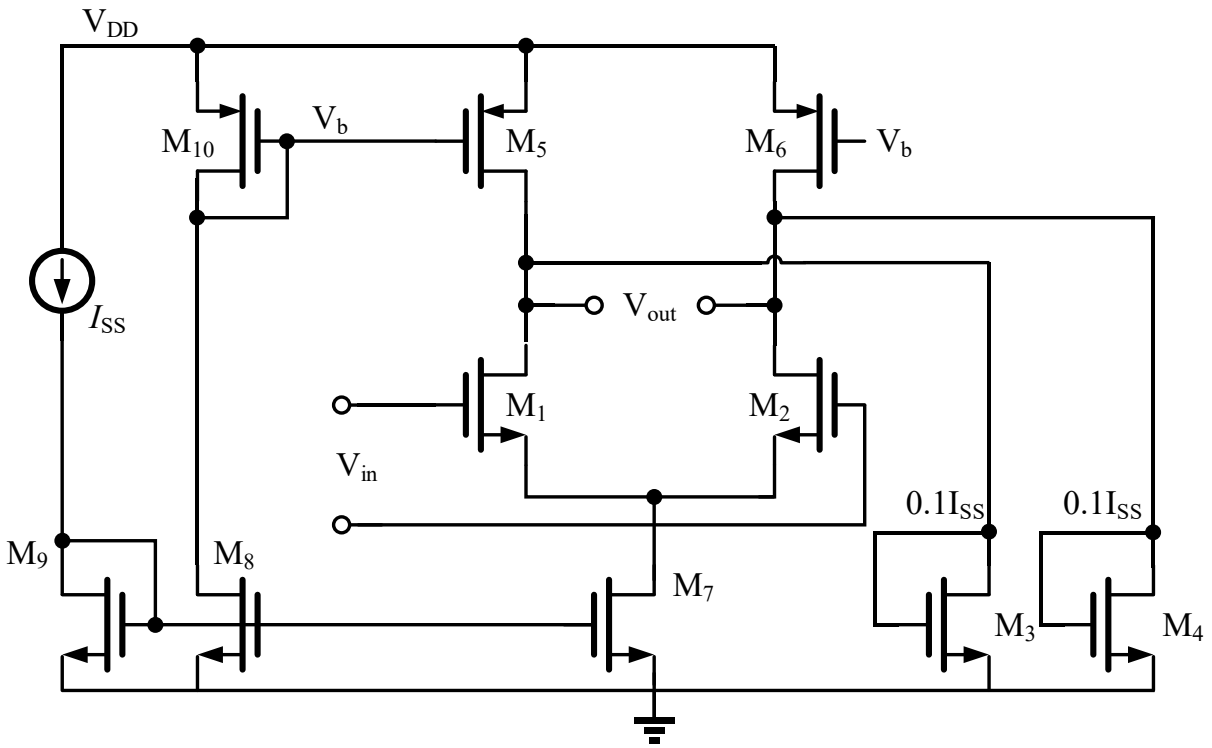

THANKS!! & Questions