Exercise 1

1-1

1-1. Two layouts of n-channel MOSFET are shown in Fig.1.1. What is the width and length of the two devices?

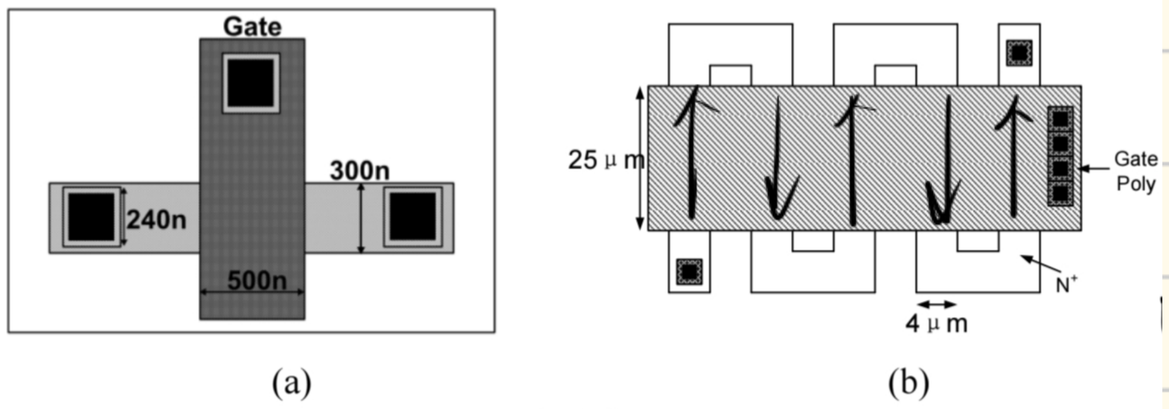

Fig.1.1

(a) $L = 500\,nm$
$W = 300\,nm$

(b) $L = 25\mu m \times 5 = 125\,\mu m$
$W = 4\mu m$

1-2

(a)

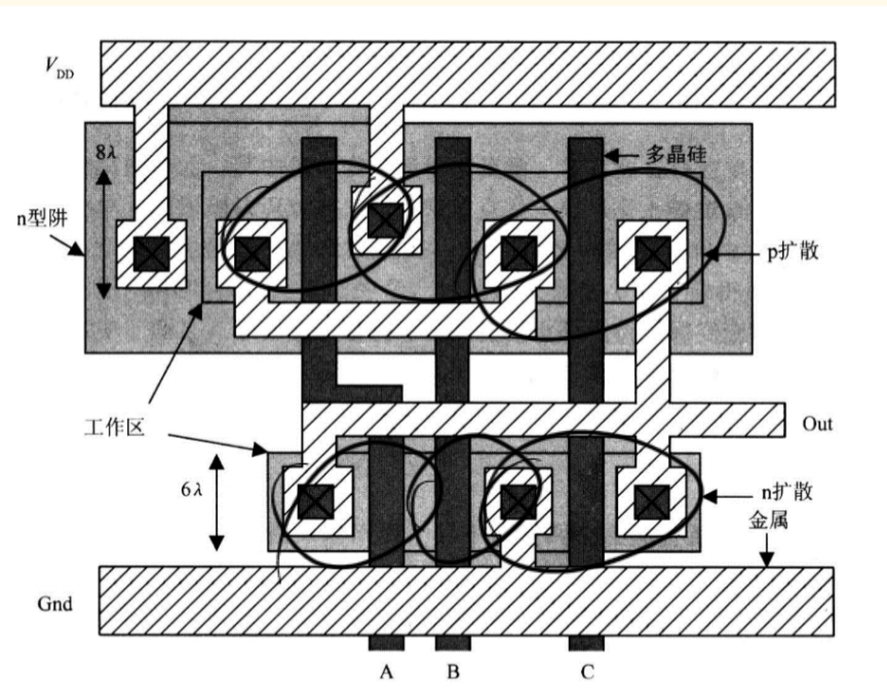

(a) p-sub, n-well technology

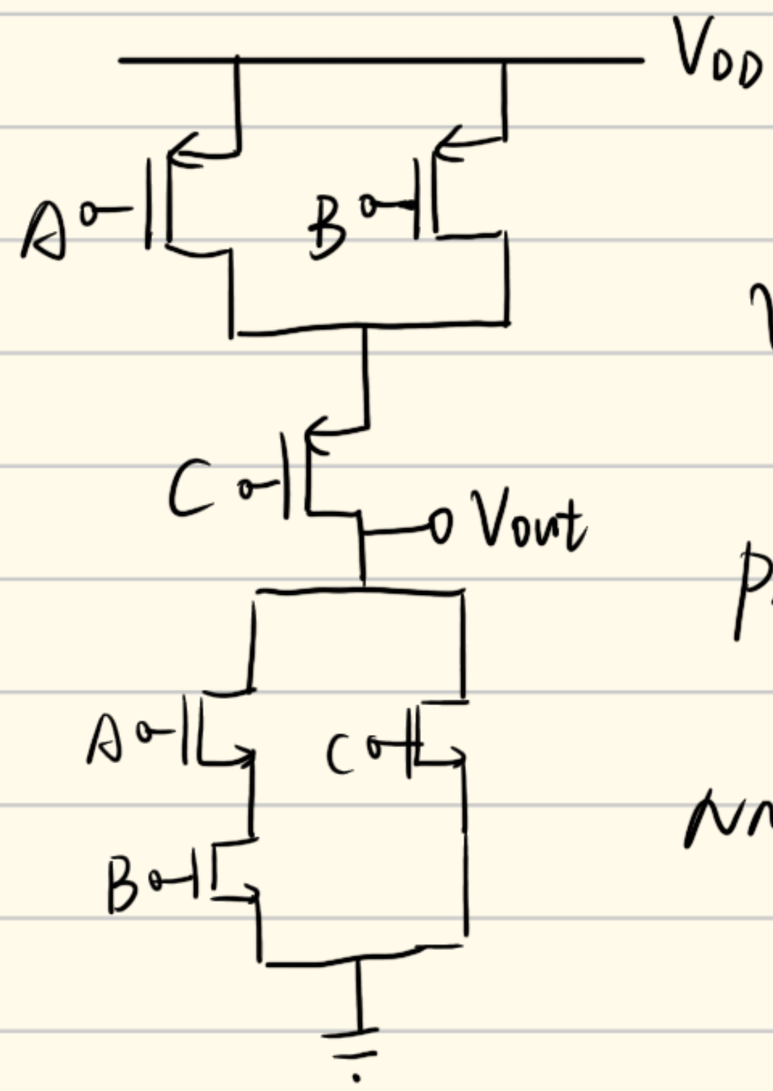

$V_{out} = \overline{AB+C}$

pmos: $\frac{W}{L} = \frac{8\lambda}{2\lambda} = \frac{3.2}{0.8}$

nmos: $\frac{W}{L} = \frac{6\lambda}{2\lambda} = \frac{2.4}{0.8}$

(b)

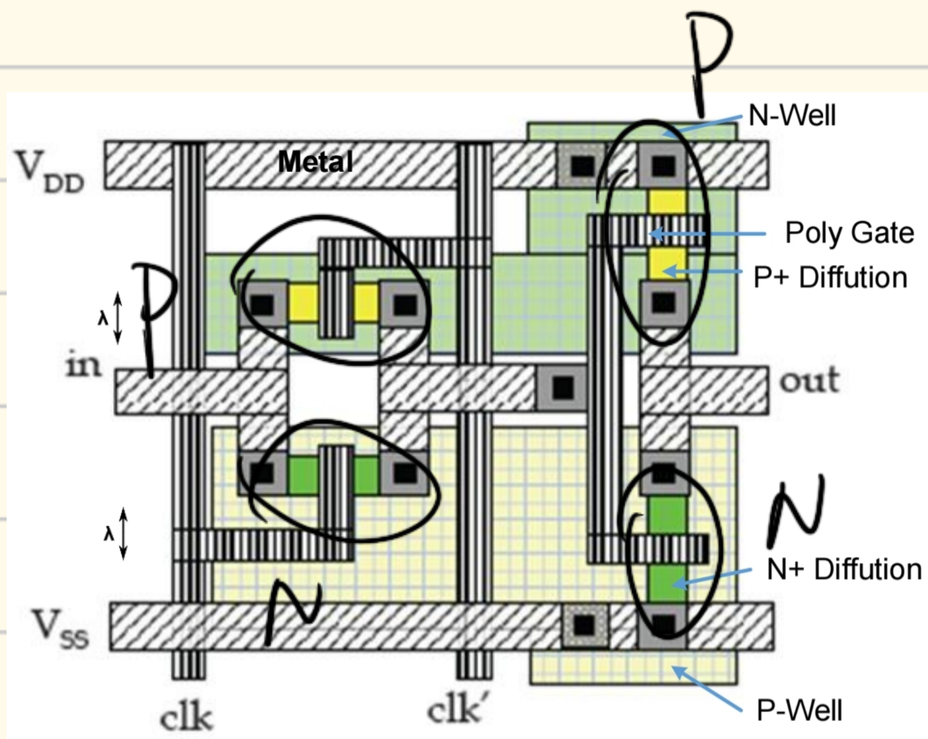

(b) dual-well technology, and $clk' = \overline{clk}$

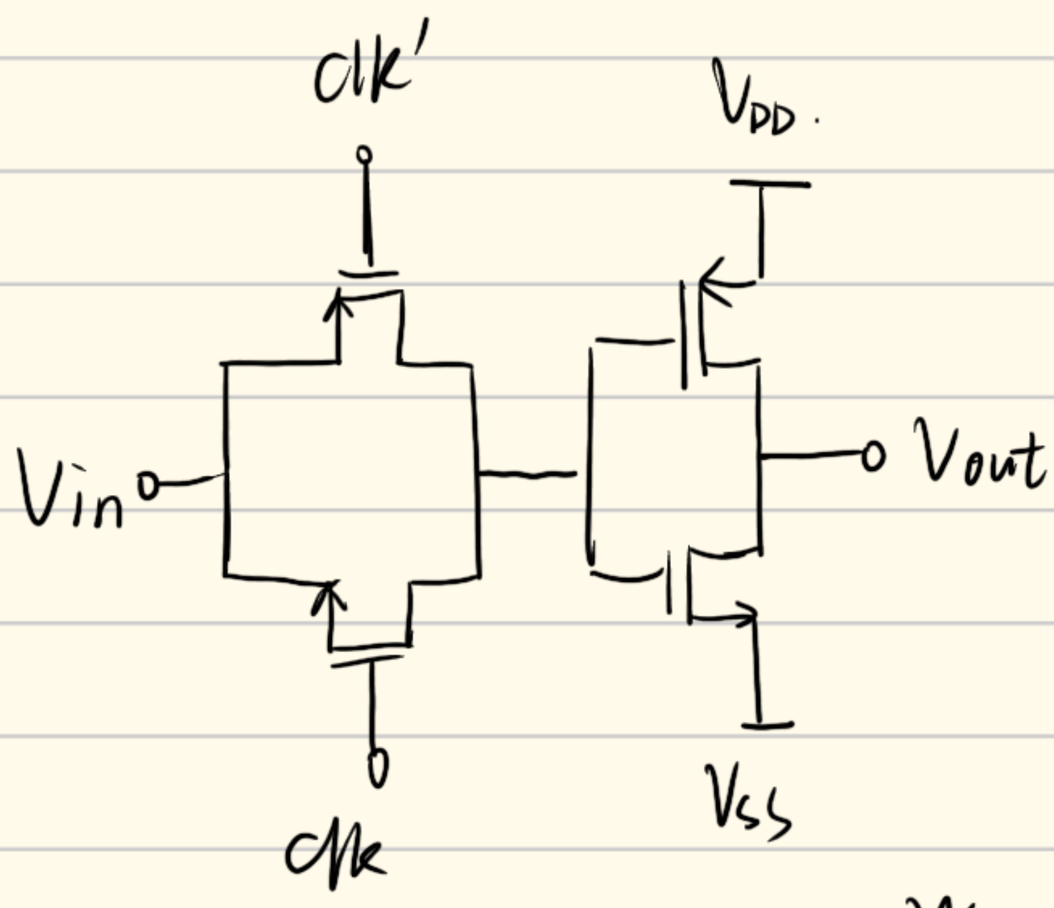

clk = 1 时

$V_{out} = \overline{V_{in}}$

clk = 0 时

$V_{out} = 0$

pmos: $\frac{W}{L} = \frac{\lambda}{2\lambda} = \frac{0.4}{0.8}$

nmos: $\frac{W}{L} = \frac{\lambda}{2\lambda} = \frac{0.6}{0.8}$

1-3

1-3. Layout of a different pair with PMOS current source loads in p-sub N-well technology is shown as Fig.1.3. Give the corresponding schematics and mark the W/L sizes of each transistor. Assume λ=0.4μm.

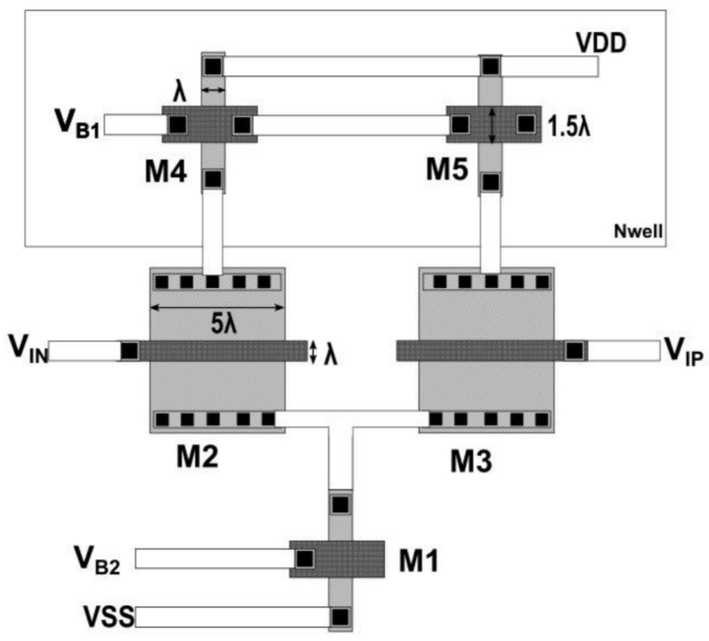

Fig.1.3

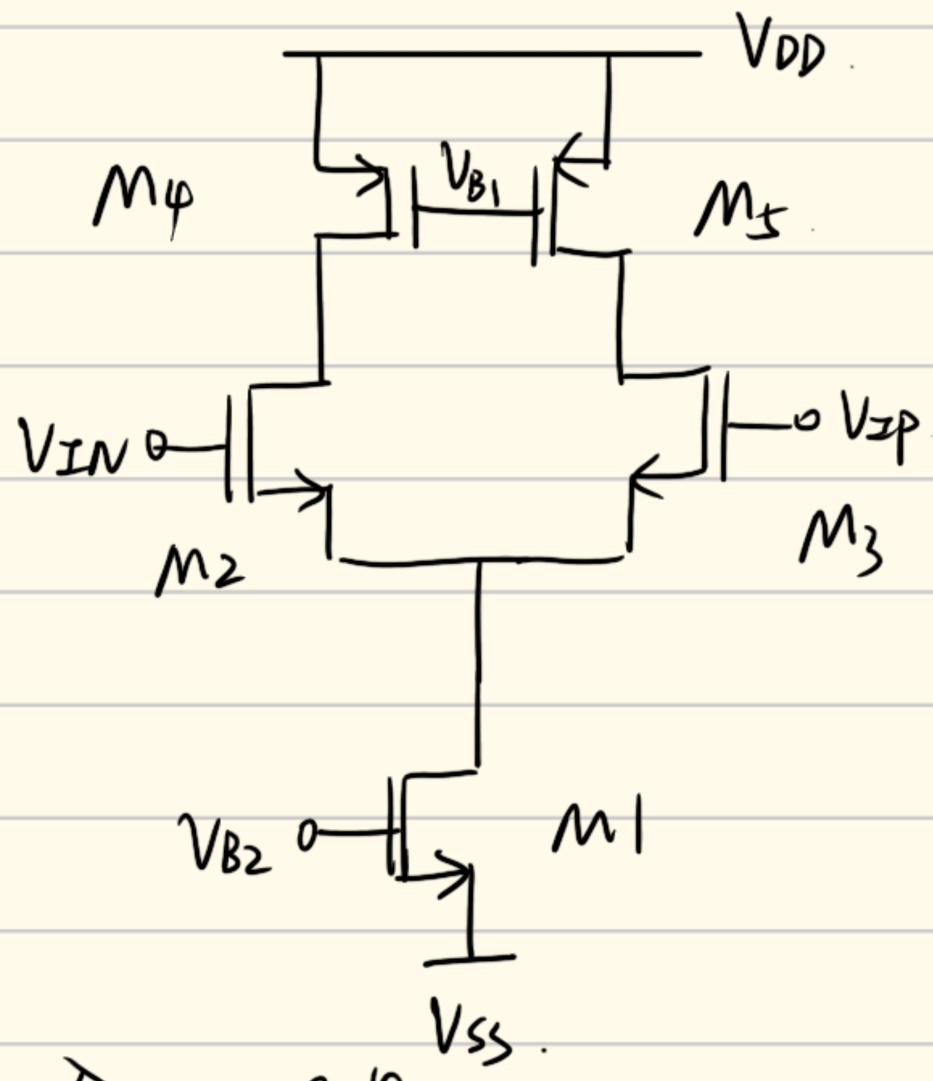

M_1、M_4、M_5 : $\frac{W}{L} = \frac{\lambda}{1.5\lambda} = \frac{0.4}{0.6}$

M_2、M_3 : $\frac{W}{L} = \frac{5\lambda}{\lambda} = \frac{2}{0.4}$