Exercise 2

2-1

2-1 The circuit shown in Fig.2.1 illustrates a single-channel MOS resistor with a W/L of 2μm/2μm. Using Table.2.1 model parameters calculate the small-signal on resistance of the MOS transistor at various values for V_S and fill in the table below. (Note that the transistor was in linear region, V_B=0, I_{DS}=0)

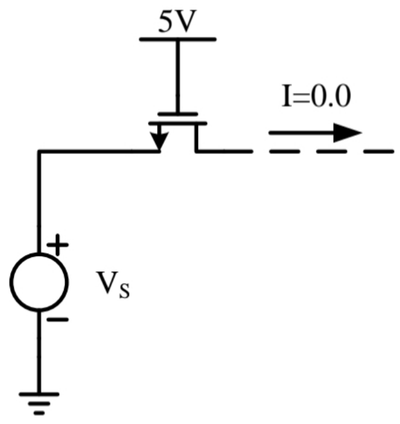

Fig.2. 1

V_S(V)	R(Ω)
0.0	
1.0	
2.0	
3.0	
4.0	
5.0	

Table.2. 1

Typical Parameter Value				
Parameter Symbol	Parameter Description	n-Channel	p-Channel	Units
V_{T0}	Threshold voltage(V_{BS}=0)	0.7	-0.8	V
K	Transconductance parameter(in saturation)	134	50	$\mu A/V^2$
γ	Bulk threshold parameter	0.45	0.4	$V^{1/2}$
λ	Channel length modulation parameter	0.1	0.2	V^{-1}
$2\|\phi_F\|$	Surface potential at strong inversion	0.9	0.8	V

$*K' = \frac{1}{2}\mu C_{ox}$

$$|V_T| = |V_{T0}| + \gamma\left(\sqrt{2|\phi_F|+|V_{SB}|} - \sqrt{2|\phi_F|}\right)$$

$$R_{on} = \frac{1}{\frac{\partial I_D}{\partial V_D}} = \frac{1}{\mu_n C_{ox}\frac{W}{L}\left(|V_{GS}|-|V_T|-|V_{DS}|\right)}$$

$K = \mu_n C_{ox} = 134\,\mu A/V^2$, $\frac{W}{L} = \frac{2\mu m}{2\mu m}$, $\gamma = 0.45$, $2\phi_F = 0.9V$.

(1) $V_S = 0V$, 则 $|V_T| = 0.7V + 0 = 0.7V$, $V_{GS} = 5V$, 管子开启.

$$R_{on} = \frac{1}{134\times10^{-6}(5-0.7V)} = 1.736k\Omega$$

(2) $V_S = 1V$, 则 $|V_T| = 0.7V + 0.193V = 0.893V$, $V_{GS} = 4V$, 开启.

$$R_{on} = \frac{1}{134\times10^{-6}(4-0.893)} = 2.402k\Omega$$

(3) $V_S = 2V$, 则 $|V_T| = 0.7V + 0.339 = 1.039V$, $V_{GS} = 3V$, 开启.

$R_{on} = 3.806k\Omega$

(4) $V_S = 3V$, 则 $|V_T| = 1.162$, $V_{GS} = 2V$, 开启.

$R_{on} = 8.905k\Omega$

(5) $V_S = 4V$, 则 $|V_T| > 1V > |V_{GS}|$, 管子不开启,

$\therefore R_{on} = \infty$

(6) $V_S = 5V$, $|V_{GS}| < |V_T|$, 管子不开启

$\therefore R_{on} = \infty$

2-2

2-2 An NMOS with W=50μm and L=0.5μm operates in the saturated region and its layout is folded shown as Fig. 2.2. Calculate the all capacitances by using the parameters in Table2.2 and $C_{ox}=3.8\times10^{-3}$ F/m, $V_R=0.6$V. Assume that the minimum size (lateral) of S/D region is 1.5μm

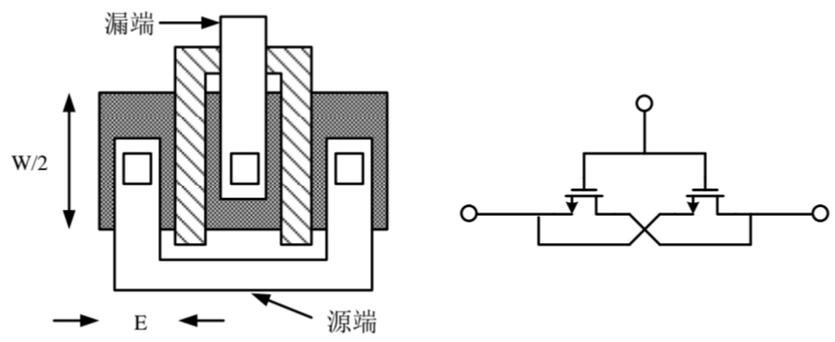

Table.2.2

NMOS Model			
LEVEL=1	VTO=0.7	GAMMA=0.45	PHI=0.9
PSUB=9e+14	LD=0.08e-6	UO=350	LAMBDA=0.1
TOX=9e-9	PB=0.9	CJ=0.56e-3	CJSW=0.35e-11
MJ=0.45	MJSW=0.2	CGDO=0.4e-9	JS=1.0e-8

$\phi\ 2\phi_F = 0.9V$

解：

$$C_J = C_{J0}\cdot\left(1+\frac{V_R}{2\phi_F}\right)^{-m_J} = 0.445\,fF/\mu m^2$$

$$C_{JSW} = C_{J0}\left(1+\frac{V_R}{2\phi_F}\right)^{-m_{JSW}} = 3.16\times10^{-3}\,fF/\mu m$$

$$L_{eff} = L - 2L_D = 0.34\mu m$$

$$C_{DB} = \frac{W}{2}EC_J + 2\left(\frac{W}{2}+E\right)C_{JSW} = 16.85\,fF$$

$$C_{SB} = 2\left(\frac{W}{2}EC_J + 2\left(\frac{W}{2}+E\right)C_{JSW}\right) = 33.71\,fF$$

$$C_{GD} = 2\times\frac{W}{2}C_{OV}$$ ，而 $C_{OV} = 0.4\times10^{-9}$ F/m

$\therefore C_{GD} = 20\,fF$ $\quad C_{GS} = \frac{2}{3}WL_{eff}C_{ox} + WC_{OV} = 63\,fF$

$$C_{GB} = \frac{WL_{eff}C_{ox}C_d}{(WL_{eff}C_{ox}+C_d)}$$ ，$C_{ox} = 3.8\times10^{-3}$ F/m

$$C_d = WL_{eff}\sqrt{q\varepsilon_{Si}P_{SUB}/4\phi_F} = 1.55\times10^{-6}\,fF$$

$\therefore C_{GB} = 1.55\times10^{-6}\,fF$

2-3

2-3 There is an N-type current source, I_D is 0.5mA, and the drain-source voltage V_{DS} must more than 0.4V when it works as a current source. If the minimum output resistance is 20 KΩ, determine the length and width of the device by using the parameters in Table.2.2.

Table.2.2

NMOS Model			
LEVEL=1	VTO=0.7	GAMMA=0.45	PHI=0.9
PSUB=9e+14	LD=0.08e-6	UO=350	LAMBDA=0.1
TOX=9e-9	PB=0.9	CJ=0.56e-3	CJSW=0.35e-11
MJ=0.45	MJSW=0.2	CGDO=0.4e-9	JS=1.0e-8

$r_o = \frac{1}{\lambda I_D} = 20k\Omega$ ， $\therefore \lambda = 0.1$

而 $L = 0.5\mu m$ （0.5μm工艺），$L_D = 0.08\mu m$，$\therefore L_{eff} = 0.34\mu m$.

计算临界值：$V_{GS}-V_{TH} = V_{DS} = 0.4V$ ，恰好饱和

$I_D = \frac{1}{2}\mu_n C_{ox}\frac{W}{L_{eff}}(V_{GS}-V_{TH})^2 \cdot (1+\lambda V_{DS})$ ，之 $\lambda V_{DS} = 0.04 \ll 1$，故忽略.

代入 $I_D = 0.5mA$，$\mu_n C_{ox} = 134\times10^{-6}\mu A/m^2$，$V_{GS}-V_{TH} = 0.4V$，$L_{eff} = 0.34\mu m$

$\therefore W = 15.86\mu m$

2-4

2-4 A "ring" MOS structure is shown in Fig.2.3. Explain how the device operations and estimate its equivalent aspect ratio. Calculate the drain junction capacitance of the structure. (use Cj and Cjsw)

$\downarrow \frac{W}{L}$

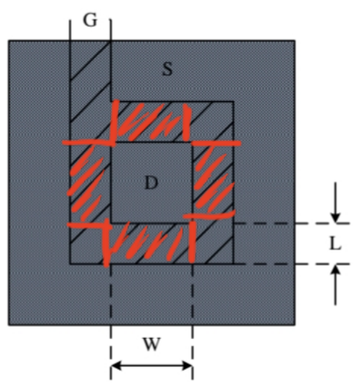

Fig.2. 3

之有4个方向可由 $S \to G \to D$，$\therefore W_{eff} = 4W$

$\therefore$ aspect ratio $= \frac{4W}{L}$.

$C_{DB} = W\cdot W\cdot C_j + 4W C_{jsw} = W^2 C_j + 4W C_{jsw}$.

2-5

2-5 Find the small-signal model (g_m, g_{mb}, g_{ds}) for an n-channel transistor with the drain at 4 V, gate at 4 V, source at 2 V, and the bulk at 0 V. Assume the model parameters from Table.2.1, and W/L = 10 μm/1 μm.

Table.2. 1

Typical Parameter Value				
Parameter Symbol	Parameter Description	n-Channel	p-Channel	Units
V_{T0}	Threshold voltage(V_{BS}=0)	0.7	-0.8	V
K	Transconductance parameter(in saturation)	134	50	$\mu A/V^2$
γ	Bulk threshold parameter	0.45	0.4	$V^{1/2}$
λ	Channel length modulation parameter	0.1	0.2	V^{-1}
$2\lvert\phi_F\rvert$	Surface potential at strong inversion	0.9	0.8	V

$*K' = \frac{1}{2}\mu C_{ox}$

$V_D = 4V$，$V_G = 4V$，$V_S = 2V$，$V_{DS} = 2V$，$V_{GS} = 2V$，$V_{SB} = 2V$.

$|V_{TH}| = |V_{TH0}| + \gamma\left(\sqrt{2|\phi_F|+|V_{SB}|} - \sqrt{2|\phi_F|}\right) = 1.04V$

$I_D = \frac{1}{2}\mu_n C_{ox}\frac{W}{L}(V_{GS}-V_{TH})(1+\lambda V_{DS}) = 1482\times10^{-6}A$

$g_m = \sqrt{2\mu_n C_{ox}\frac{W}{L}I_D} = 2.818\times10^{-3}\ S$

$g_{mb} = g_m \cdot \frac{\gamma}{2(2|\phi_F|+V_{SB})^{\frac{1}{2}}} = 0.372\times10^{-3}\ S$.

$g_{ds} = \frac{\lambda I_D}{1+\lambda V_{DS}} = 0.124\times10^{-3}\ S$