Exercise 3

3-1

3-1. Consider the circuit of Fig.3.1.
a) Using the simple model with $V_{Don} = 0.7V$, solve for I_D;
b) Find I_D and V_D using the ideal diode equation. Use $I_S = 10^{-14}$ A and T=300 K.

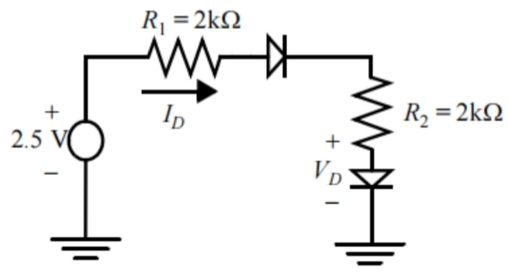

Fig.3.1

解：a) 有2个二极管，∴ $\Delta V = 2V_{Don} = 1.4V$，$I_D = \frac{2.5V - 1.4V}{4k\Omega} = 275\mu A$

b) $I_D = I_S(e^{V_S/\phi_T} - 1)$，$\phi_T = \frac{kT}{q} = 26mV$

∴ $I_D = 10^{-14}(e^{V_D/26mV} - 1) = \frac{2.5V - 2V_D}{4k\Omega}$

∴ $V_D = 0.628V$，$I_D = 311\mu A$

3-2.

3-2. For the circuit in Fig.1.2, V_s=3.3 V. Assume $A_D = 12\ \mu m^2$, $\varphi_0 = 0.65$ V, and m= 0.5, $N_A = 2.5\times10^{16}\ cm^{-3}$, $N_D = 5\times10^{15}\ cm^{-3}$ and $\varepsilon_{si} = 11.7\varepsilon_0$, $\varepsilon_0 = 8.85\times10^{-12} F/m$.
a) Is the diode forward- or reverse-biased?
b) Find I_D and V_D;
c) Find the depletion region width, W_j, of the diode;
d) Use the parallel-plate model to find the junction capacitance, C_j;
e) Set V_s = 1.5 V. Again using the parallel-plate model, explain qualitatively why C_j increases.

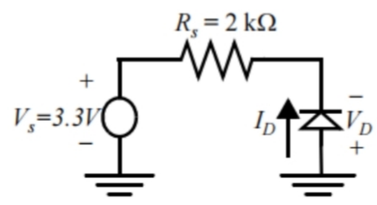

Fig.3.2

a) reverse-biased.

b) ∵反偏，∴ $I_D = 0$，∴ $V_D = -V_S = -3.3V$.

c) $W_j = \sqrt{\frac{2\varepsilon_{si}}{q}\frac{N_A+N_D}{N_AN_D}(\varphi_0 - V_D)}$，$q = 1.6\times10^{-19}C$，$V_D = -V_S = -3.3V$

而 $\varepsilon_{si} = 11.7\varepsilon_0$，$\varepsilon_0 = 8.85\times10^{-12} F/m$，

∴ $\varepsilon_{si} = 1.035\times10^{-10} F/m$，代入 N_A，N_D.

故 $W_j = 1.107\times10^{-4} cm$

d) $C_j = \frac{\varepsilon_{si}\cdot A_D}{W_j}$，又 $A_D = 12\times10^{-8} cm^2$，∴ $C_j = 1.12\times10^{-15} F$.

e) 新电压 $V_s' = 1.5V < 3.3V$，∴反偏的电压小了，故耗尽区的 W_j 也会减小。

即类似将平行板电容器两板拉近，会使电容变大.

3-3

3-3. Fig.3.3 shows NMOS and PMOS devices with drains, source, and gate ports annotated. Determine the operation region (saturation, linear, or cutoff) and the drain current I_D for each of the biasing configurations given in table. Assume the model parameters from Table.3.1, V_{BS}=0 and W/L = 1, L=1μm fill the table

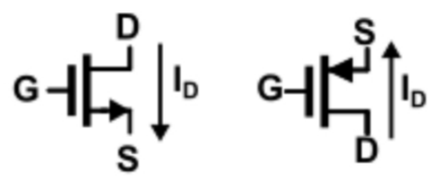

Table.3.1

Parameter Symbol	Parameter Description	Typical Parameter Value		Units
		n-Channel	p-Channel	
V_{T0}	Threshold voltage (V_{BS}=0)	0.7	−0.7	V
K'	Transconductance parameter (in saturation)	110.0	50.0	$\mu A/V^2$
γ	Bulk threshold parameter	0.4	0.57	$V^{1/2}$
λ	Channel length modulation parameter	0.04 (L=1μm) 0.01 (L=2μm)	0.05 (L=1μm) 0.01 (L=2μm)	V^{-1}
$2\|\Phi_F\|$	Surface potential at strong inversion	0.7	0.8	V

$*K' = \frac{1}{2}\mu C_{ox}$

	V_{GS}(V)	V_{DS}(V)	Operation region	I_D(μA)
NMOS	2.5	2.5	saturation	392.04
	3.3	2.2	linear	726
	0.6	0.1	cutoff	0
PMOS	-0.5	-1.25	cutoff	0
	-2.5	-1.8	saturation	176.58
	-2.5	-0.7	linear	101.5

∵ $V_{BS}=0$, ∴ $V_{nTH} = V_{nTH_0} = 0.7V$, $V_{pTH} = V_{pTH_0} = -0.7V$.

NMOS: 临界为 $V_{GS} - 0.7V = V_{DS}$.

pmos: 临界为 $|V_{GS}| - 0.7V = |V_{DS}|$.

饱和区: $|I_D| = \left|\frac{1}{2}\mu_n C_{ox}\frac{W}{L}(V_{GS}-V_{TH})^2(1+\lambda|V_{DS}|)\right|$ → 注意要加绝对值! ∵系数>1.

线性区: $|I_D| = \left|\mu_n C_{ox}\frac{W}{L}\left[(V_{GS}-V_{TH})V_{DS} - \frac{1}{2}V_{DS}^2\right]\right|$

3-4

3-4. An NMOS device is plugged into the test configuration shown below in Fig .3.4 The input V_{in} is 2V. The current source draws a constant current of 50 μA. R is a variable resistor between 10kΩ and 30 kΩ. Transistor M1 has following transistor parameters: k'= 110μA/V², V_T = 0.7V, and V_{DSAT} = 0.6V, and has a W/L = 2.5μ/0.25. For simplicity, the body effect and channel length modulation can be neglected, i.e λ=0, γ=0.

a) When R =10kΩ find the operation region, V_D and V_S.

b) For the case of R = 10kΩ, would V_S increase or decrease if $\lambda \neq 0$. Explain qualitatively.

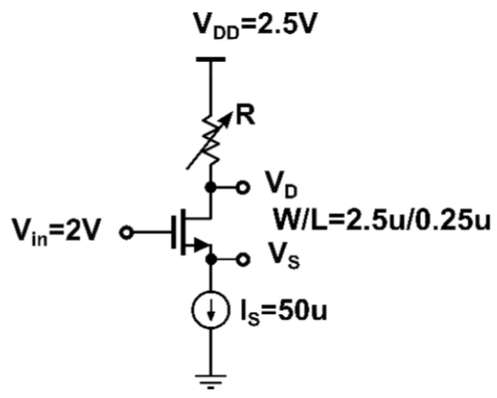

Fig.3.4

a) $R=10k\Omega$, ∴ $V_D = V_{DD} - I_S R = 2V$

故 $V_{DS} - V_{GS} = 0$, ∴在饱和区

而 $I_D = I_S = 50\mu A = k'\frac{W}{L}(V_{GS}-0.7V)^2$

∴ $V_S = 1.087V$

b) 若有沟道调制效应, 则 I_D 不变, 乘了 $(1+\lambda V_{DS})$ 系数, ∴ $V_{GS}-V_{TH}$ 减小.
而 V_{TH} 不变, ∴ $V_G - V_S$ 减小, 而 $V_G = 2V$, 故 V_S 增大

3-5

3-5. Show that two MOS transistors connected in parallel with channel widths of W_1 and W_2 and identical channel lengths of L can be modeled as one equivalent MOS transistor whose width is W_1+W_2 and whose length is L, as shown in Fig.3.5 Assume the transistors are identical except for their channel widths.

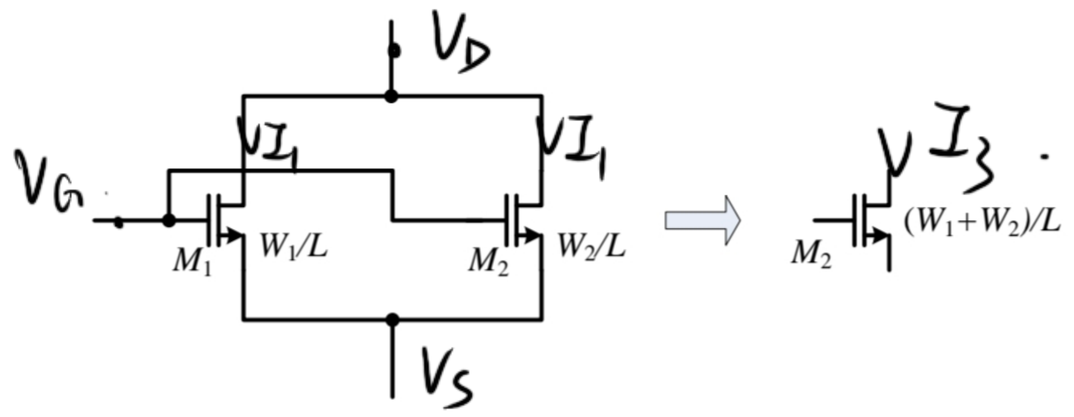

设 V_G, V_D, V_S, I_1, I_2, I_3

① 线性区, $V_{DS} \le V_{GS}-V_{TH}$

则 $\begin{cases} I_1 = \mu C_{ox}\frac{W_1}{L}\left[(V_{GS}-V_{TH})V_{DS}-\frac{1}{2}V_{DS}^2\right] \\ I_2 = \mu C_{ox}\frac{W_2}{L}\left[(V_{GS}-V_{TH})V_{DS}-\frac{1}{2}V_{DS}^2\right] \\ I_3 = \mu C_{ox}\frac{W_3}{L}\left[(V_{GS}-V_{TH})V_{DS}-\frac{1}{2}V_{DS}^2\right] \end{cases}$

$\because W_3 = W_1+W_2$, $\therefore I_1+I_2=I_3$, 故可等效

② 饱和区, $V_{DS} \ge V_{GS}-V_{TH}$

同理, 易知 $\because W_3=W_1+W_2$, $I_1+I_2=I_3$, 故可等效.

3-6

3-6. Show that two MOS transistors connected in series with channel lengths of L_1 and L_2 and identical channel widths of W can be modeled as one equivalent MOS transistor whose width is W and whose length is L_1+L_2, as shown in Fig. 3.6. Assume the transistors are identical except for their channel lengths. Ignore the body effect and channel-length modulation.

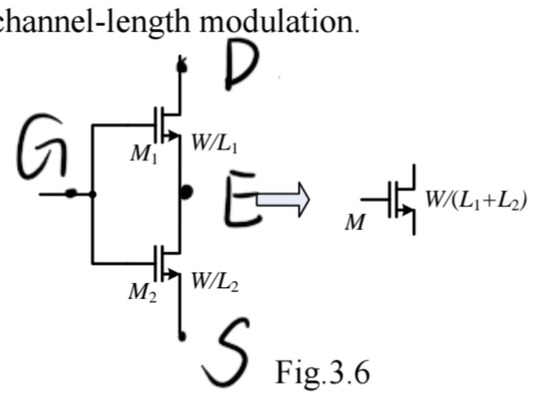

Fig.3.6

解: ① 截止状态

当 $V_{GS} < V_{TH}$ 时, 又 $V_{GE} < V_{GS}$, 故 $V_{GE} < V_{TH}$

么两个都截止, 成立.

② 当 M_1 在三极管区时

则 $V_{DE} < V_{GE}-V_{TH}$, 而且用加 V_{ES}

则 $V_{DE}+V_{ES} < V_{GE}+V_{ES}-V_{TH}$, 即 $V_{DS} < V_{GS}-V_{TH}$

而 $V_{ES} < V_{DS}$, 故 $V_{ES} < V_{GS}-V_{TH}$, $\therefore M_2$ 也在三极管区.

故有 $\begin{cases} I_1 = \mu_n C_{ox}\frac{W}{L_1}\left[(V_{G1}-V_{TH})V_{DE}-\frac{1}{2}V_{DE}^2\right] \\ I_2 = \mu_n C_{ox}\frac{W}{L_2}\left[(V_{G2}-V_{TH})V_{ES}-\frac{1}{2}V_{ES}^2\right] \\ V_{DS} = V_{DE}+V_{ES} \\ V_{GS} = V_{GE}+V_{ES} \end{cases}$

因为串联，$\therefore I_1 = I_2$，故联立可得

$$I_D = \mu_n C_{ox} \frac{W}{L_1+L_2}\left[(V_{GS}-V_{TH})V_{DS} - \frac{1}{2}V_{DS}^2\right]$$，故成立.

(3) 当 M_1 在饱和区时，则 $V_{DE} > V_{GE} - V_{TH}$.

故 $V_{DE} + V_{ES} > V_{GE} + V_{ES} - V_{TH}$，即 $V_{DS} > V_{GS} - V_{TH}$.

又 $V_E = V_G - V_{GE} < V_G - V_{TH}$，故有 $V_{ES} < V_{GS} - V_{TH}$

$\therefore M_2$ 工作在三极管区.

$$\therefore \begin{cases} I_1 = \frac{1}{2}\mu_n C_{ox}\frac{W}{L_1}(V_{GE}-V_{TH})^2 \\ I_2 = \mu_n C_{ox}\frac{W}{L_2}\left[(V_{GS}-V_{TH})V_{ES} - V_{ES}^2\right] \\ V_{DS} = V_{DE} + V_{ES} \\ V_{GE} = V_{GS} - V_{ES} \end{cases}$$

又 $I_1 = I_2$，$\therefore$ 联立可得 $I_D = \frac{1}{2}\mu_n C_{ox}\frac{W}{L_1+L_2}(V_{GS}-V_{TH})^2$

$\because$ 手动而 MOS 管而 $V_{DS} < V_{GS} - V_{TH}$（前面得）

$\therefore$ 在三极管区，而 I_D 表达式符合三极管区特征，故成立.

故得证.