Exercise 5

Table 5.1

		Typical Parameter Value		
Parameter Symbol	Parameter Description	n-Channel	p-Channel	Units
V_{T0}	Threshold voltage(V_{BS}=0)	0.7	-0.8	V
K	Transconductance parameter(in saturation)	134	50	$\mu A/V^2$
γ	Bulk threshold parameter	0.45	0.4	$V^{1/2}$
λ	Channel length modulation parameter	0.1	0.2	V^{-1}
$2\lvert\phi_F\rvert$	Surface potential at strong inversion	0.9	0.8	V

$* K = \mu C_{OX}$

5.1

5.1 Calculate the output resistance and the minimum output voltage, while maintaining all devices in saturation, for the circuits shown in Figure 5.1. Assume that i_{OUT} is actually 10μA. Use Table 5.1 for device model information. V_{bs}=0 V.

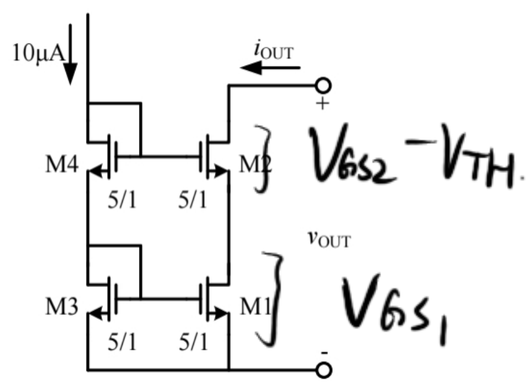

解:

由题意知此为 Cascode 电流镜，且 $V_{DS}=0$，故不考虑体效应

∴有 $V_{GS3} = V_{GS4} = \left(\sqrt{\frac{2I_D}{K\frac{W}{L}}} + V_{TH}\right) = 0.87V$

$g_m = \sqrt{\frac{2KW}{L}I_D} = 115.8\times10^{-6}$,

由公式知 $r_{out} = r_{ds1} + r_{ds2} + g_m r_{ds1} r_{ds2} = \frac{1}{\lambda I_D} + \frac{1}{\lambda I_D} + g_m\left(\frac{1}{\lambda I_D}\right)^2$

$= 117.8\times10^6\ \Omega$.

$V_{outmin} = V_{GS1} + V_{GS2} - V_{TH} = 2\times0.87V - 0.7V = 1.04V$

5.2

5.2 A reference circuit is shown in figure 5.2, assume that $(W/L)_1=(W/L)_2=(W/L)_3=4$, $(W/L)_4=1$, please calculate the symbolic expression of V_{REF}.（已知各管处于饱和区且各管阈值电压为 Vt）

没说Table 5.1 不考虑入!

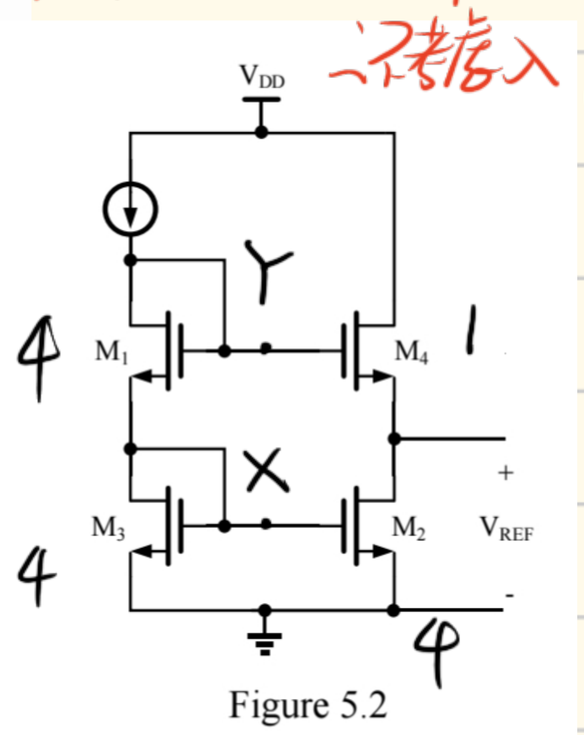

Figure 5.2

解:

$V_{REF} = V_{DS2} = V_Y - V_{GS4} = V_{GS1} + V_{GS3} - V_{GS4}$

$2V_{GS} = V_{OV} + V_T$

∴ $V_{REF} = V_{OV1} + V_{OV2} - V_{OV4} + V_T$

而 ∵ $I_{D1} = I_{D2} = I_{D3} = I_{D4}$, $V_{OV} = \sqrt{\frac{2I_D}{\mu_n C_{ox}\frac{W}{L}}}$

∴ $V_{OV4} = 2V_{OV1} = 2V_{OV2}$

∴ $V_{REF} = V_T$

5.3

体效应忽略

5.3 As the circuits shown in Figure 5.3, I_{REF}=0.3mA and γ=0. Using the model parameters in Table 5.1,

(a) Calculate the voltage V_b when V_X=V_Y.

(b) If V_b is 100mV smaller than the value in (a), calculate the deviation of I_{out} from 300 μ A.

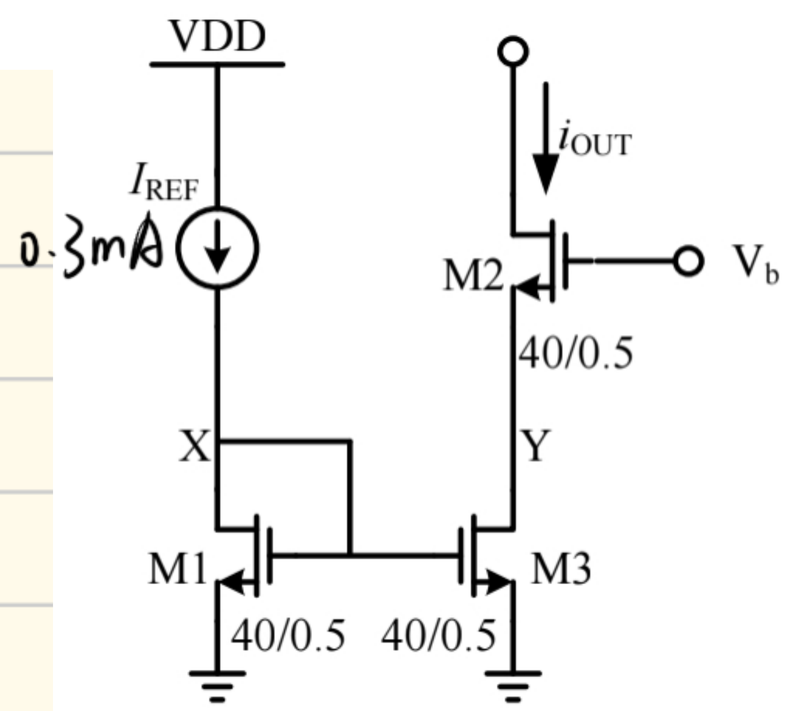

(a) $I_1 = I_3 = I_2 = 0.3mA$

$\therefore V_{GS} = V_T + \sqrt{\frac{2I}{K\frac{W}{L}}} = 0.937V$

$\therefore V_b = V_Y + V_{GS_2} = 2V_{GS} = 1.874V$

(b) $V_b' = 1.774V$, $\therefore V_{GS} = 0.887V$

$\because \lambda = \frac{1}{V_E L}$, $\therefore \lambda \propto \frac{1}{L}$, $\therefore \lambda(L=0.5\mu m) = 2\lambda(L=1\mu m) = 0.2V^{-1}$

$I_{out} = I_{REF}\frac{1+\lambda(V_{GS_1}+\Delta V_b)}{1+\lambda V_{GS_1}}$, $\therefore \Delta I_{out} = I_{REF}\frac{\lambda \Delta V_b}{1+\lambda V_{GS_1}} = 5.05\mu A$

5.4

5.4 Design M3 and M4 of Figure 5.4(a) so that the output characteristics are identical to the circuit shown in Figure 5.4(b). It is desired that i_{OUT} is ideally 10uA.

同样的电压，同样的电流

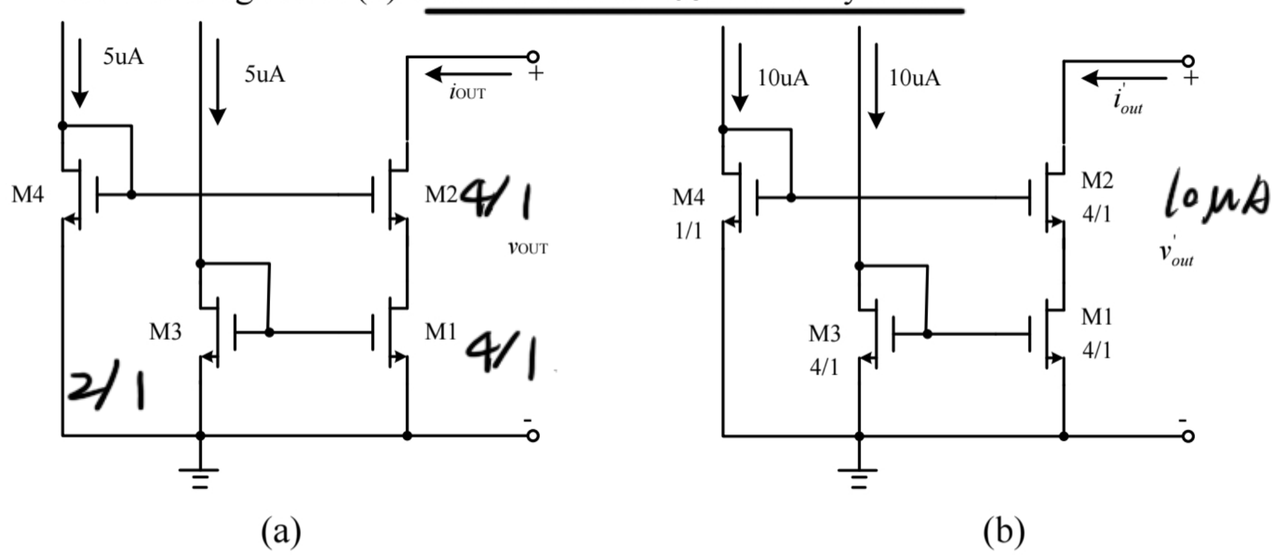

(a) (b)

$\because i_{out} = 10\mu A$, $V_{GS_3} = V_{GS_1}$, $\therefore \frac{(W/L)_1}{(W/L)_3} = \frac{2}{1}$

又 $(W/L)_1 = 4/1$, $\therefore (W/L)_3 = 2/1$

图(b)中，$\because \frac{(W/L)_6}{(W/L)_2} = \frac{1}{4}$，而 $i_{D_4} = i_{D_2}$，$\therefore V_{ov_4} = 2V_{ov_2}$

$\because$ output 特性一致，$\therefore$ 两图的 V_{GS4} 相同

$\therefore V_{GS_4} = V_{GS_4}'$，而电流为一半，$I = \frac{1}{2}\mu_n C_{ox}\frac{W}{L}(V_{GS}-V_{TH})^2$

$\therefore \left(\frac{W}{L}\right)_4 = \left(\frac{W}{L}\right)_4' \times \frac{1}{2} = \frac{1}{2}$

综上，$\left(\frac{W}{L}\right)_3 = \frac{2}{1}$，$\left(\frac{W}{L}\right)_4 = \frac{1}{2}$