Exercise 7

7.1

7.1 Assume that W/L ratios of Figure 7.1 are $(W/L)_1 = 2\mu m/1\mu m$ and $(W/L)_2 = (W/L)_3 = (W/L)_4 = 1\mu m/1\mu m$. Find the dc value of v_{IN} that will give a dc current in M1 of 110μA. Calculate the small signal voltage gain and output resistance using the parameters of Table 7.1. Assume $\lambda=\gamma=0$.

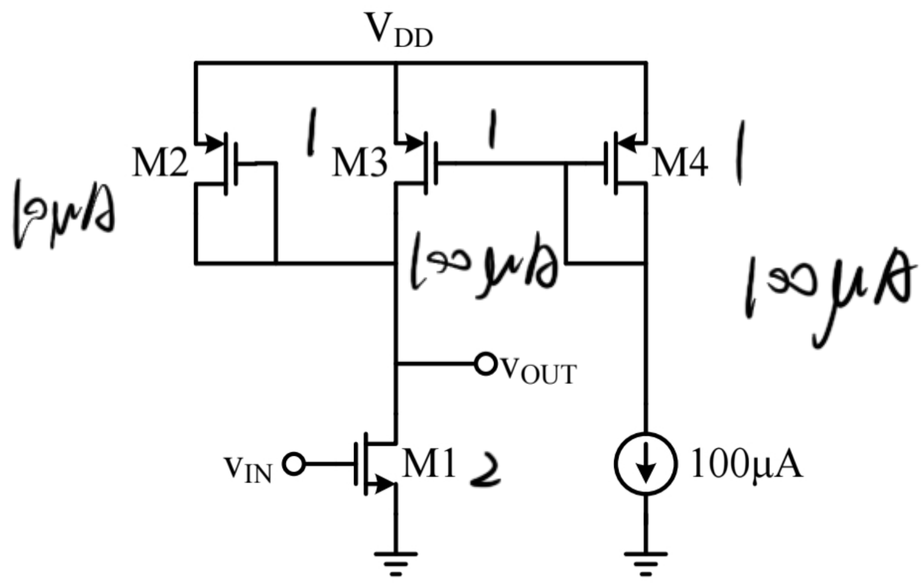

Figure 7.1

$I_{D_1} = \frac{1}{2}k_N\left(\frac{W}{L}\right)_1 (V_{in} - V_{TH})^2$

$\therefore V_{in} = 1.61\,V$

$R_{out} = r_{o_1} // r_{o_3} // \frac{1}{g_{m2}}$

$\approx \frac{1}{g_{m2}}$

而 $I_2 = I_1 - I_3 = I_1 - I_4 = 10\mu A$, $g_{m2} = \sqrt{2\mu_p C_{ox}\left(\frac{W}{L}\right)_2 I_D} = 3.16\times10^{-5}$

$\therefore R_{out} = \frac{1}{g_{m2}} = 3.16\times10^{4}\,\Omega$

$A_v = -g_{m1}\cdot R_{out} = -\frac{g_{m1}}{g_{m2}} = -7.68$ (共源 $A_v = -g_m r_{out}$)

7.2

7.2 Suppose the common-source stage of Fig 7.2 is to provide an output swing from 1V to 2.5V. Assume that $(W/L)_1 = 50/0.5$, $R_D = 2k\Omega$, $V_{DD} = 3V$ and $\lambda = 0$. Use model parameters in Table 7.1.

a) Calculate the input voltages that yield $V_{out} = 1V$ and $V_{out} = 2.5V$.

b) Calculate the drain current and the transconductance of M_1 for both cases.

c) How much does the small-signal gain, g_mR_D, vary as the output goes from 1V to 2.5V?

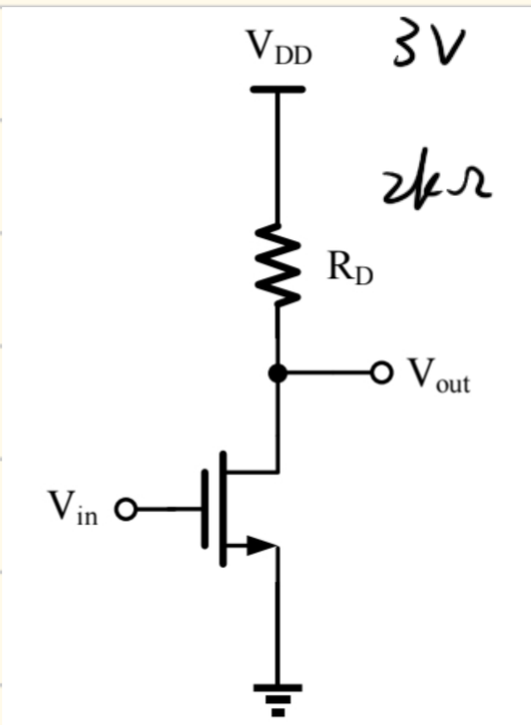

Figure 7.2

a) $V_{out} = V_{DD} - I_D R_D$

① $V_{out} = 1V$ 时, $I_D = 1mA$

而 $V_{in} = V_{TH} + \sqrt{\frac{2I_D}{\mu_n C_{ox}\frac{W}{L}}} = 1.086\,V$

② $V_{out} = 2.5V$ 时, $I_D = 0.25mA$

$V_{in} = V_{TH} + \sqrt{\frac{2I_D}{\mu_n C_{ox}\frac{W}{L}}} = 0.893V$

b) ① $V_{out} = 1V$ 时, $I_D = 1mA$, $g_{m1} = \mu_n C_{ox}\frac{W}{L}(V_{GS} - V_{TH}) = \sqrt{2\mu_n C_{ox}\frac{W}{L} I_D}$

$= 5.18\times10^{-3}\,S$

② $V_{out} = 2.5V$ 时, $I_D = 0.25mA$, $g_{m1} = \sqrt{2\mu_n C_{ox}\frac{W}{L} I_D} = 2.59\times10^{-3}\,S$

c) $\Delta g_m R_D = (\Delta g_m)\times R_D = 5.18$

7.3

无r_o、无体效应.

7.3 Consider the circuit of Fig 7.3 with $(W/L)_1 = 50/0.5$ and $(W/L)_2 = 10/0.5$. Assume that $\lambda = \gamma = 0$, $V_{DD} = 3V$.

a) At what input voltage is M_1 at the edge of the triode region? What is the small-signal gain under this condition?

b) When V_{out} is 0.66 V, what is the small-signal gain under this condition?

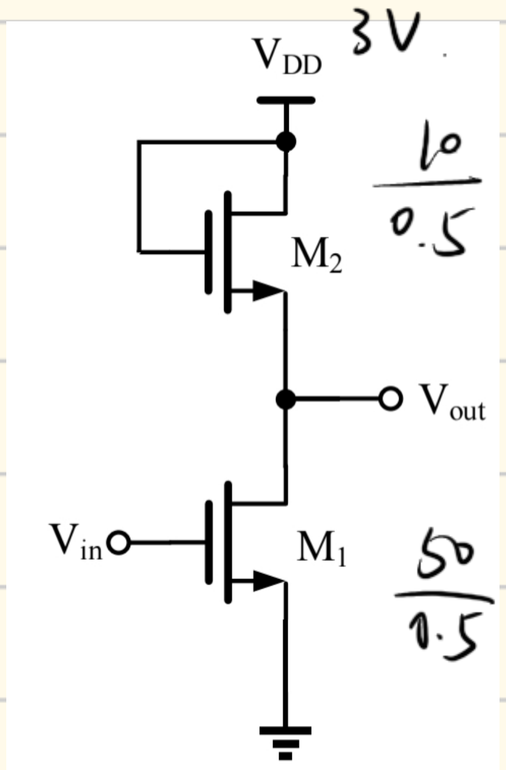

Figure 7.3

a) edge of triode:

$V_{in} - V_{TH_1} = V_{out}$

又 $I_{D_1} = I_{D_2}$, $\therefore \frac{1}{2} K_n \left(\frac{W}{L}\right)_2 (V_{DD} - V_{out} - V_{TH_2})^2 = \frac{1}{2} K_n \left(\frac{W}{L}\right)_1 (V_{in} - V_{TH})^2$.

代入 $V_{out} = V_{in} - V_{TH}$, 有 $\frac{1}{2} \times 134 \times \frac{10}{0.5} \times (3 - V_{in})^2 = \frac{1}{2} \times 134 \times \frac{50}{0.5} \times (V_{in} - 0.7)^2$.

故 $V_{in} = 1.41V$, $V_{out} = 0.71V$.

$$A_V = -\frac{g_{m_1}}{g_{m_2}} = -\sqrt{\frac{K_n \left(\frac{W}{L}\right)_1}{K_n \left(\frac{W}{L}\right)_2}} = -2.24$$

b) $V_{out} = 0.66V < 0.71V$, $\therefore M_1$ 在线性区

$$I_{D_1} = \mu_n C_{ox} \left(\frac{W}{L}\right)_1 \left[(V_{in} - V_{TH}) V_{out} - \frac{1}{2} V_{out}^2\right].$$

$$\therefore g_{m_1} = \frac{\partial I_{D_1}}{\partial V_{GS}} = \mu_n C_{ox} \left(\frac{W}{L}\right)_1 V_{out} = K_n \left(\frac{W}{L}\right)_1 V_{out}.$$

$A_V = -\frac{g_{m_1}}{g_{m_2}}$, 而 $\frac{1}{2} K_n \left(\frac{W}{L}\right)_2 (V_{DD} - V_{out} - V_{TH})^2 = K_n \left(\frac{W}{L}\right)_1 \left[(V_{in} - V_{TH}) V_{out} - \frac{1}{2} V_{out}^2\right]$

$\therefore V_{out} = 1.84V$

$$\therefore A_V = -\frac{g_{m_1}}{g_{m_2}} = \frac{\left(\frac{W}{L}\right)_1 V_{out}}{\left(\frac{W}{L}\right)_2 (V_{DD} - V_{out} - V_{TH})} = -2.02$$

7.4

7.4 In the circuit of Fig 7.4, $(W/L)_1 = 20/0.5$, $I_1 = 1mA$, and $I_S = 0.75mA$. Assuming $\lambda = 0$, $V_{DD} = 3V$, calculate $(W/L)_2$ such that M_1 is at the edge of triode region. What is the small-signal voltage gain under this condition? Use model parameters in Table 7.1.

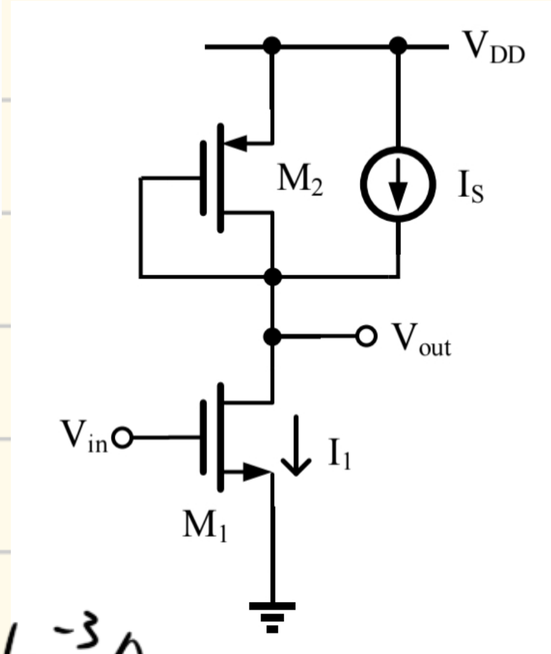

Figure 7.4

$I_2 = I_1 - I_S = 0.25\ mA$

则由线性区: $V_{out} = V_{in} - V_{TH}$

又 $\frac{1}{2}k_n(\frac{W}{L})_1(V_{in}-V_{TH1})^2 = \frac{1}{2}k_p(\frac{W}{L})_2(V_{DD}-V_{out}-|V_{TH2}|)^2 = 10^{-3}A$.

故 $V_{in} = 1.31V$, $(\frac{W}{L})_2 = 3.961$

$\therefore A_v = -\frac{g_{m1}}{g_{m2}} = \sqrt{\frac{k_n(\frac{W}{L})_1 I_1}{k_p(\frac{W}{L})_2 I_2}} = -10.4$

7.5

7.5 Consider the circuit of Fig 7.5 with $(W/L)_1 = 50/0.5$, $R_D = 2k\Omega$, and $R_S = 200\ \Omega$, $V_{DD} = 3V$. Use model parameters in Table 7.1.

a) Calculate the small-signal voltage gain if $I_D = 0.5mA$.

b) Assuming that $\lambda = \gamma = 0$, calculate the input voltage that places M1 at the edge of the triode region. What is the gain under this condition?

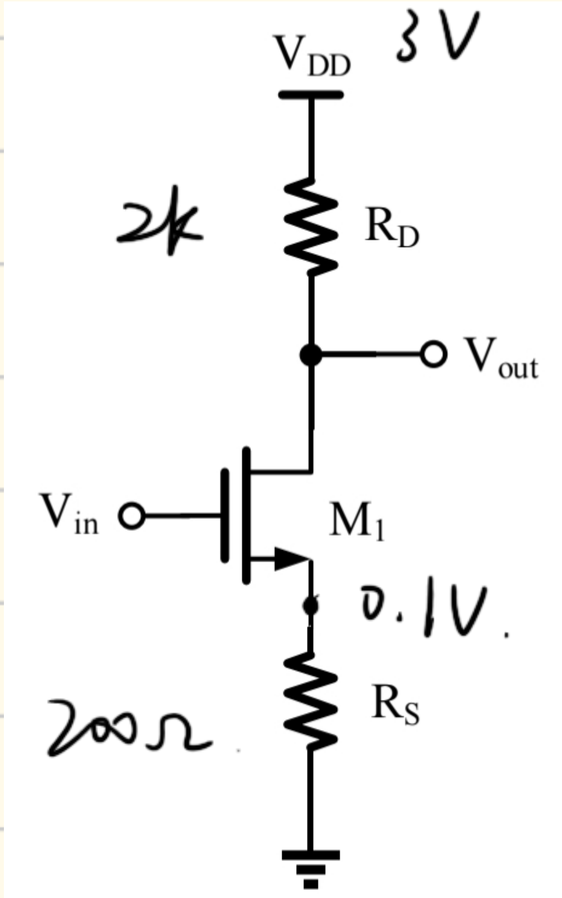

Figure 7.5

a) $A_v = -G_m r_{out}$

$= -G_m \times (r_{oD} // R_D)$, $V_S = I_S R_S = 0.1V$

又 $r_{oD} = r_o + R_S + (g_m + g_{mb}) r_o R_S >> R_D$

$\therefore A_v \approx -G_m R_D$

又 $G_m = \frac{g_m}{1+g_m R_S}$, $\therefore A_v = -\frac{g_m}{1+g_m R_S} R_D$

而 $V_{TH1} = V_{TH0} + \gamma(\sqrt{2|\phi_F| + V_{SB}} - \sqrt{2|\phi_F|}) = 0.723\ V$

$V_{DS} = V_{out} - V_S = 1.9V$

$g_m = \sqrt{2k_n(\frac{W}{L})(1+\lambda V_{DS}) I_D} = 3.993 \times 10^{-3} S$

$\therefore A_v = -\frac{g_m}{1+g_m R_S} R_D = -4.44$

b) 又 M_1 临界线性, $\therefore V_{out} = V_{in} - V_{TH1}$

$V_{in} = V_{GS1} + R_S I_D$, $V_{DD} - I_D R_D = V_{out}$, $\therefore V_{DD} - (R_S + R_D) I_D = V_{GS1} - V_{TH1}$.

$\therefore I_D = \frac{1}{2}k_n(\frac{W}{L})_1(V_{GS1} - V_{TH1})^2 = \frac{1}{2}k_n(\frac{W}{L})[V_{DD} - (R_S+R_D)I_D]^2$.

解得 $I_{D1} = 1.58mA$, $I_{D2} = 1.17mA$

当 $I_D = 1.58mA$ 时，$V_{GS} < V_{TH}$，舍弃

$\therefore I_D = 1.17mA$，$V_{in} = V_{DD} - R_D I_D + V_{TH_1} = 1.36V$.

$$g_{m_1} = \sqrt{2k_n(\frac{W}{L})_1 I_D} = 5.60\times10^{-3}\ S$$

而 $$G_m = \frac{g_{m_1}}{1+g_{m_1}R_S} = 2.642\times10^{-3}$$

$$A_v = -G_m R_D = -5.283$$