Exercise 8

Table 8.1

		Typical Parameter Value		
Parameter Symbol	Parameter Description	n-Channel	p-Channel	Units
V_{T0}	Threshold voltage(V_{BS}=0)	0.7	-0.8	V
K	Transconductance parameter(in saturation)	134	50	$\mu A/V^2$
γ	Bulk threshold parameter	0.45	0.4	$V^{1/2}$
λ	Channel length modulation parameter	0.1	0.2	V^{-1}
$2\lvert\phi_F\rvert$	Surface potential at strong inversion	0.9	0.8	V

$K = \mu C_{OX}$

8.1

8.1 Calculate the differential transconductance g_{md} and the differential voltage gain A_v of an n-channel input differential amplifier shown in Figure 8.1 , with the parameters shown in table 8.1. Consider I_{SS}=100μA (the drain current of M5), and $W_1/L_1=W_2/L_2=W_3/L_3=W_4/L_4=1$. Assuming all the channel lengths are equal to 1μm, and V_{DD}=5V. If $W_1/L_1=W_2/L_2=10W_3/L_3=10W_4/L_4=10$, repeat the calculation

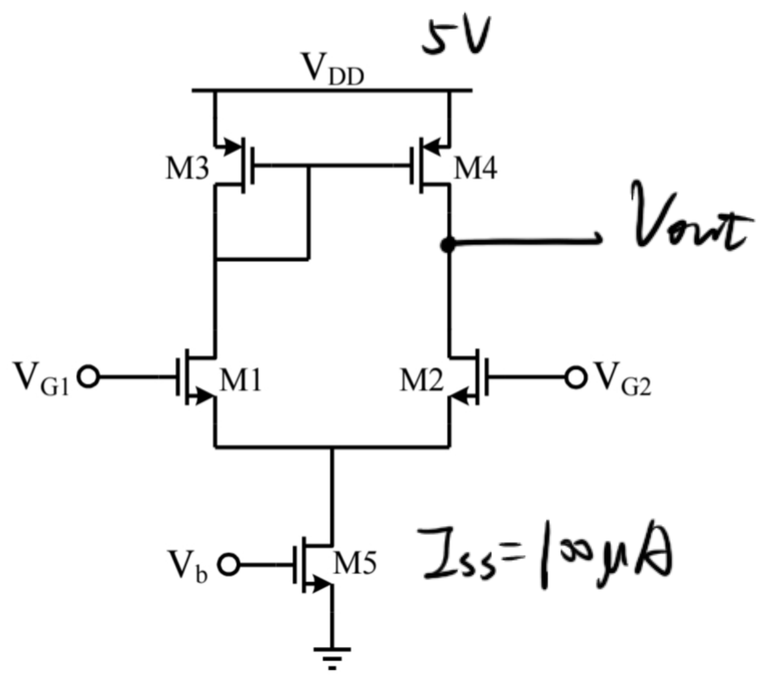

Figure 8.1

① W/L 不变时

$g_{md} = g_{m1} = g_{m2}$

$= \sqrt{2\mu_n C_{ox}\frac{W}{L}\cdot\frac{1}{2}I_{SS}} = 1.158\times10^{-4}\,S$

$r_{out} = r_{o2} // r_{o4}$

$= \frac{1}{\lambda_n I_2} // \frac{1}{\lambda_p I_4}$

$= 6.67\times10^{4}\,\Omega$

$\therefore A_v = g_{md}\, r_{out} = 7.72\ V/V$

② (W/L)变时

$g_{md} = g_{m1} = g_{m2} = \sqrt{2\mu_n C_{ox}\frac{W}{L}\cdot\frac{1}{2}I_{SS}} = 3.661\times10^{-4}\,S$

$r_{out} = r_{o2} // r_{o4}$, $A_v = g_{md}\, r_{out} = 24.4\ V/V$.

8.2

8.2 Calculate the maximum(V_{IC}(max)) and the minimum input common-mode voltages (V_{IC}(min)), and the input common mode voltage range (ICMR) of an n-channel input differential amplifier shown in Figure 8.1, with the parameters shown in table 8.1. Assume all MOSFETs are in saturation, all the $(W/L)_i$ are equal to 10μm/1μm, I_{SS}=10μA, and V_{DD}=5V.

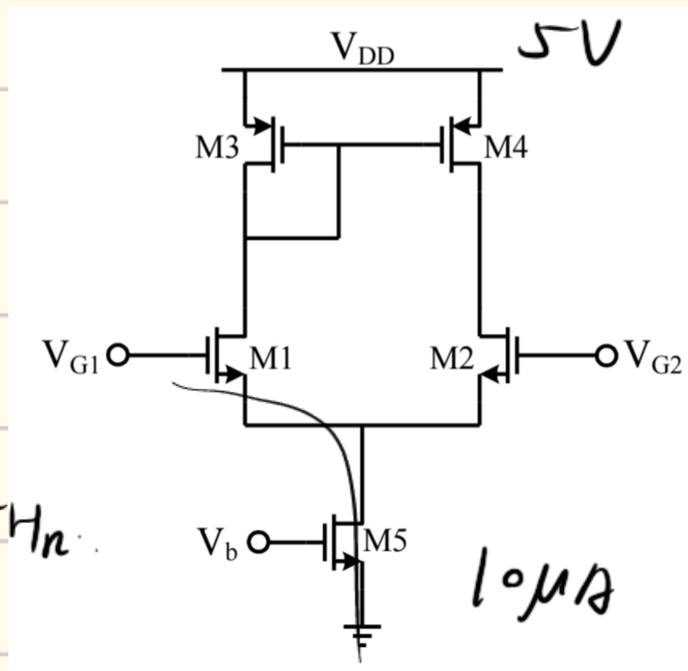

Figure 8.1

$V_{IC}(min) = V_{DS5} + V_{GS1} = V_{GS5} - V_{TH} + V_{GS1}$

$= \left(\sqrt{\frac{2\times I_{SS}}{k_n(\frac{W}{L})_5}} + V_{TH}\right) + \left(\sqrt{\frac{2\times\frac{1}{2}I_{SS}}{k_n(\frac{W}{L})_1}} + V_{TH}\right) - V_{TH} = 0.91V$.

$V_{IC}(max) = V_{out} + V_{THn} = V_F + V_{THn} = V_{DD} - |V_{GS3}| + V_{THn}$

$= 5V - \left|\sqrt{\frac{2\times\frac{1}{2}I_{SS}}{k_p(\frac{W}{L})_3}} - V_{THp}\right| + V_{THn}$

$= 4.76V$

$\therefore ICMR = V_{IC}(max) - V_{IC}(min) = 3.85V$

8.3 Find the value of the unloaded differential-transconductance, g_{md}, and the unloaded differential-voltage gain, A_v, for the p-channel input differential amplifier of Figure 8.2 when I_{SS}=10μA and I_{SS}=1μA. What is the slew rate of the differential amplifier if a 100 pF capacitor is attached to the output? Assuming $W_1/L_1=W_2/L_2=W_3/L_3=W_4/L_4=1$, and all the channel lengths are equal to 1μm. Use the transistor parameters of Table 8.1.

→ 圖里面畫的是 n-channel!

8.3

① $I_{SS}=10\mu A$

$$g_{md}=g_{m1}=g_{m2}=\sqrt{2\mu_p C_{ox}\frac{W}{L}\frac{1}{2}I_{SS}}=2.236\times10^{-5}S$$

$$r_{out}=r_{o2}\,//\,r_{o4},\quad g_{out}=g_2+g_4$$

$$A_v=g_{md}\,r_{out}=\frac{g_{m1}}{g_2+g_4}=\frac{2g_{m1}}{(\lambda_n+\lambda_p)I_{SS}}$$

$$=14.9\,V/V$$

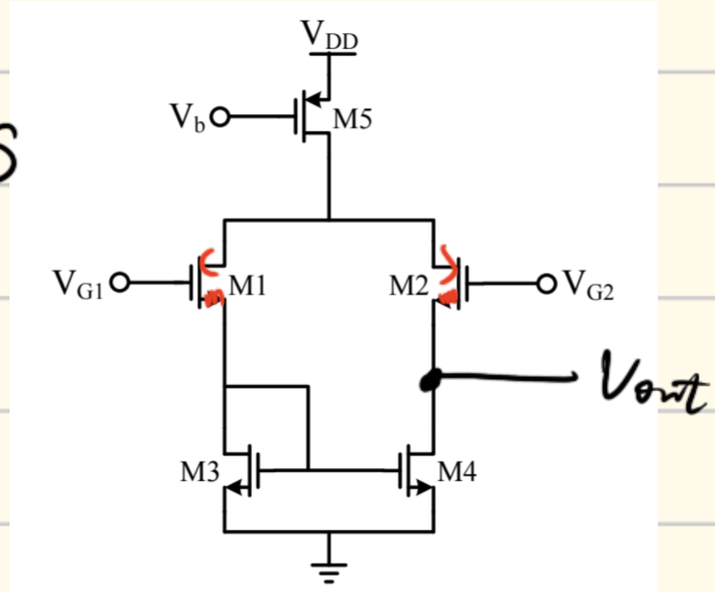

Figure 8.2

② $I_{SS}=1\mu A$

同理, $g_{md}=\sqrt{2\mu_p C_{ox}\frac{W}{L}\frac{1}{2}I_{SS}}=7.07\times10^{-6}S$.

$$A_v=g_{md}\,r_{out}=47.13\,V/V$$

slew rate: (i) $I_{SS}=10\mu A$, $SR=\frac{I_{SS}}{C_L}=0.1V/\mu s$

(ii) $I_{SS}=1\mu A$, $SR=\frac{I_{SS}}{C_L}=0.01\,V/\mu s$.

8.4 In the circuit of Fig 8.3, assume that I_{SS}=1mA, V_{DD}=3V and W/L=50/0.5 for all the transistors. And $I_{D5}=I_{D6}=0.8(I_{SS}/2)$. Assuming $\lambda\neq0$.

(a) Determine the voltage gain.

(b) Calculate V_b.

(c) If I_{SS} requires a minimum voltage of 0.4V, what is the maximum differential output swing?

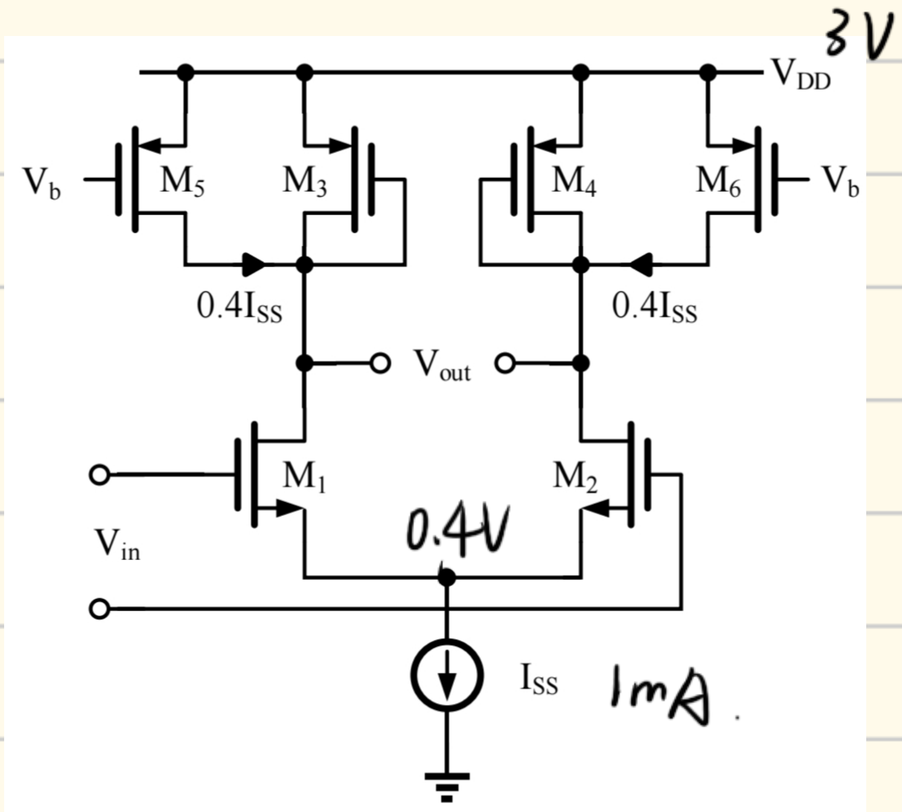

Figure 8.3

(a) $A_v=-\frac{g_{m1}}{g_{m3}}=\sqrt{\frac{\mu_n C_{ox}\frac{W}{L}I_1}{\mu_p C_{ox}\frac{W}{L}I_3}}$

$$=-\sqrt{5\times\frac{134}{50}}=-3.66\,V/V$$

(b)

$$I_5=0.4I_{SS}$$

$$V_b=V_{DD}-|V_{GS5}|$$

$$|V_{GS5}|=\sqrt{\frac{2I_5}{\mu_p C_{ox}\frac{W}{L}}}+|V_{THp}|=1.2V$$

$$\therefore V_b=1.8V$$

(c) $V_{out\,max}=\min(V_{DD}-|V_{THp}|,\ V_b+|V_{THp}|)=2.2V$

$V_{out\,min}=\max(V_{min}+V_{GS1}-V_{THn},\ V_{DD}-|V_{GS3}|)$

$=1.92V$

$\therefore V_{out,swing}=2\times(V_{out\,max}-V_{out\,min})=0.56V$

8.5

8.5 The circuit shown in Figure 8.4 called a folded-current mirror differential amplifier and is useful for low values of power supply. Assume that all W/L values of each transistor is 100. Using the parameters shown in table 8.1,

a) Find the maximum input common mode voltage, $V_{IC}(max)$ and the minimum input common mode voltage, $V_{IC}(min)$. Keep all transistors in saturation for this problem.

b) What is the input common mode voltage range, ICMR?

c) Find the small signal voltage gain, v_{out}/v_{in}, if $v_{in} = v_1 - v_2$.

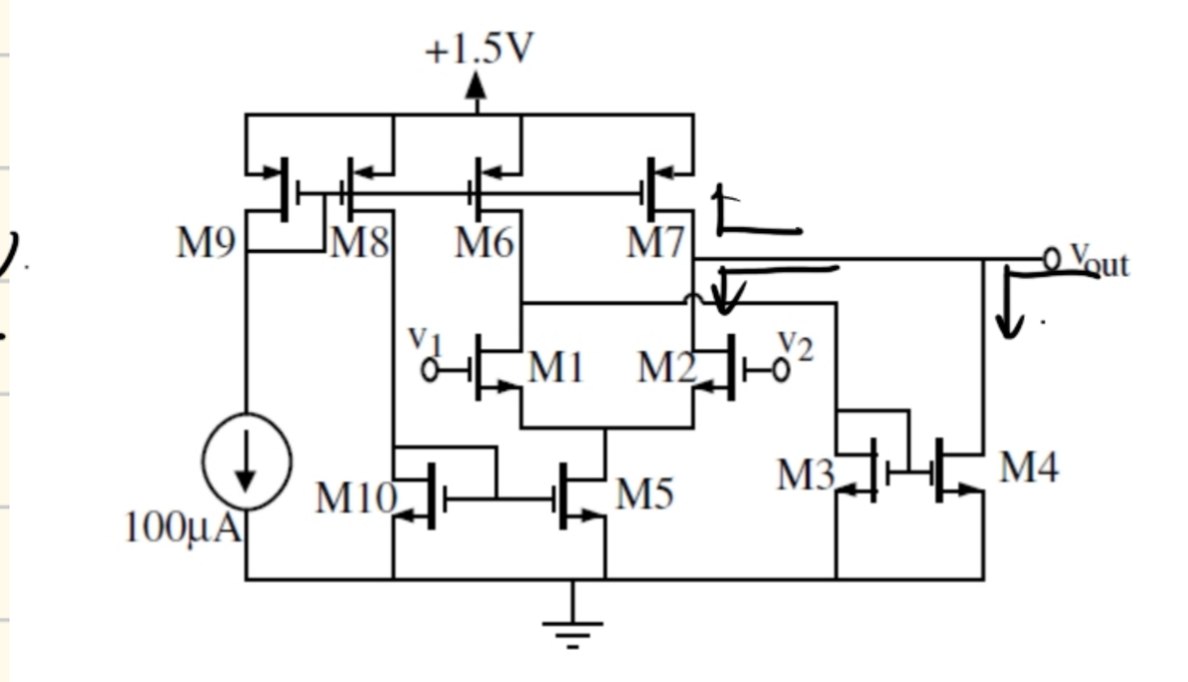

a) $V_{ICmax} = V_{GS3} + 2V_{THN} = 1.486V$

$V_{ICmin} = V_{SS} + V_{GS5} - V_{THN} + V_{GS1} = 0.908V$.

b) $ICMR = V_{max} - V_{min} = 0.578V$

c) $g_{md} = g_{m1} = g_{m2} = \sqrt{2\mu_n C_{ox}\frac{W}{L}\frac{1}{2}I_{SS}} = 1.158\times10^{-3}S$.

$r_{o4} = r_{o2} = \frac{1}{\lambda_n I_{SS}} = 2\times10^5\Omega$. $r_{o7} = \frac{1}{\lambda_p I_{SS}} = 5\times10^4\Omega$.

$\therefore A_v = g_{md}(r_{o2} // r_{o4} // r_{o7}) = 38.36V/V$.

8.6

8.6 In the circuit of Fig 8.5, assume that I_{SS} = 0.5mA, V_{DD} = 3V, $(W/L)_{1,2}$ = 50/0.5 and $(W/L)_{3,4}$ = 10/0.5. I_{SS} current is provided by NMOS, and its W/L = 50/0.5. Assuming $\lambda \neq 0$.

a) Calculate the range of input common mode voltage.

b) If $V_{in,CM}$ = 1.5V, draw a sketch of the small signal differential voltage gain of the circuit when V_{DD} changes from 0 to 3V.

c) If the mismatch threshold voltage of M_1 and M_2 is 1mV, calculate CMRR.

d) If the W_3 = 10μm and W_4 = 11μm, calculate CMRR.

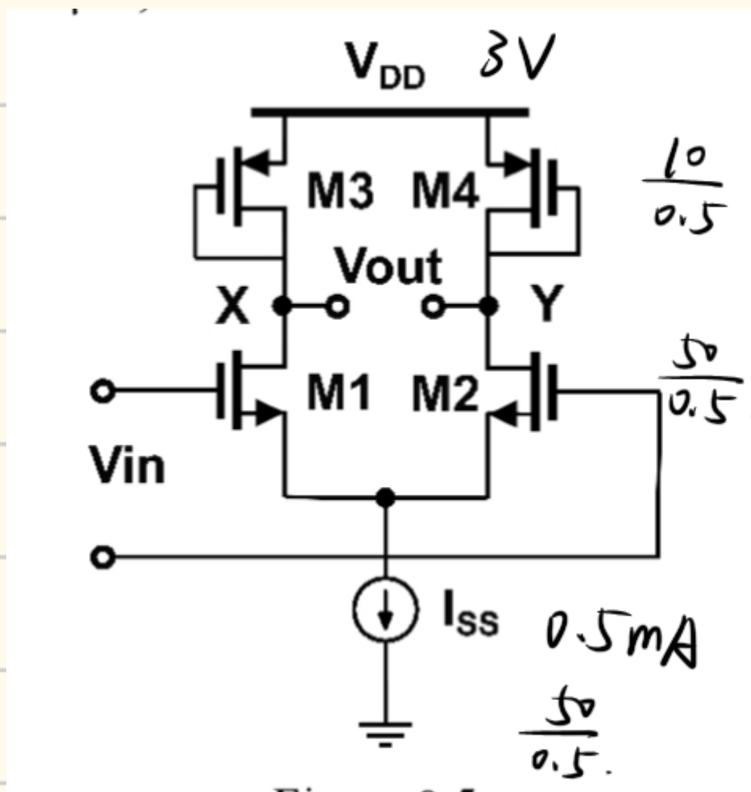

Figure 8.5

a)

$V_{THN} = 0.7V$,

$\therefore V_{in,cm} \geq V_{GS1} + V_{ISS\,min} = V_{TH} + \sqrt{\frac{2\times\frac{1}{2}I_{SS}}{\mu_n C_{ox}(\frac{W}{L})_1}} + \sqrt{\frac{2\times I_{SS}}{\mu_n C_{ox}(\frac{W}{L})_1}}$

$= 1.166V$

又 $V_{in,cm} - V_{TH1} \leq V_{out}$. 而 $V_{out} = V_{DD} - V_{GS3}$

$\therefore V_{in,cm\,max} = V_{TH1} + V_{DD} - V_{GS3} = 2.193V$

$\therefore ICMR = V_{in,cm\,max} - V_{in,cm\,min} = 1.027V$.

b) $\because V_{THP} = -0.8V$, $\therefore$ 开启电压为0.8V

转折点: $V_{DD} = V_{in,cm} - V_{THN} + V_{GS3} = 2.307V$.

而 $A_{v\,max} = -\frac{g_{m3}}{g_{m1}} = -3.66$

$\therefore$ 图为 $\Rightarrow$

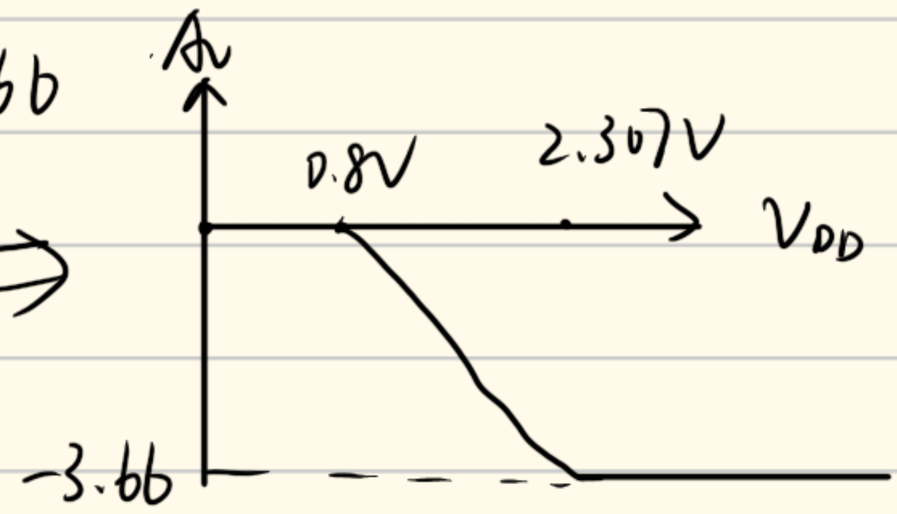

c) 当 M_1 与 M_2 失配，∴ $g_{m1} \neq g_{m2}$. $g_{m3} = g_{m4}$

$i_{D1} = g_{m1}(V_{in,cm} - V_P)$

$i_{D2} = g_{m2}(V_{in,cm} - V_P)$

$V_{out1} = -\frac{1}{g_{m3}} \cdot i_{D1}$, $V_{out2} = -\frac{1}{g_{m4}} \cdot i_{D2}$

$$\frac{g_{m1}}{g_{m3}} = \frac{g_{m2}}{g_{m4}} = \sqrt{\frac{k_n(\frac{W}{L})_{1,2}}{k_n(\frac{W}{L})_{3,4}}}$$

∴ $V_{out1} = V_{out2}$, ∴ $A_{cm\to dm} = 0$. $CMRR = \infty$.

d) $A_{dm\to dm} = -g_m R_D$

$A_{cm\to dm} = -\frac{g_m \Delta R_D}{1+2g_m R_{SS}}$

$$\therefore CMRR = \left|\frac{A_{dm\to dm}}{A_{cm\to dm}}\right| = \frac{1+2g_m R_{SS}}{\frac{\Delta R_D}{R_D}}$$

∵ $R_{D1} = \frac{1}{g_{m3}}$, $R_{D2} = \frac{1}{g_{m4}}$

$$\therefore \frac{\Delta R_D}{R_D} = \frac{R_{D1} - R_{D2}}{R_{D1}} = 1 - \frac{R_{D2}}{R_{D1}} = 1 - \sqrt{\frac{(W/L)_3}{(W/L)_4}} = 0.0465.$$

$g_m = \sqrt{2k_n(\frac{W}{L})_1 i_{D1}} = 2.588 \times 10^{-3} S$

$\lambda = 2 \times 0.1 = 0.2$

$R_{SS} = \frac{1}{\lambda I_{SS}} = 20k\Omega$,

$$\therefore CMRR = \frac{1+2\times 2.588\times 10^{-3} S \times 20k\Omega}{0.0465} = \underline{2270}.$$

8.7

8.7 A two-pole feedback system is designed such that $|\beta H(\omega_{p2})| = 1$ and $|\omega_{p1}| << |\omega_{p2}|$ (Figure 8.6). How much is the phase margin?

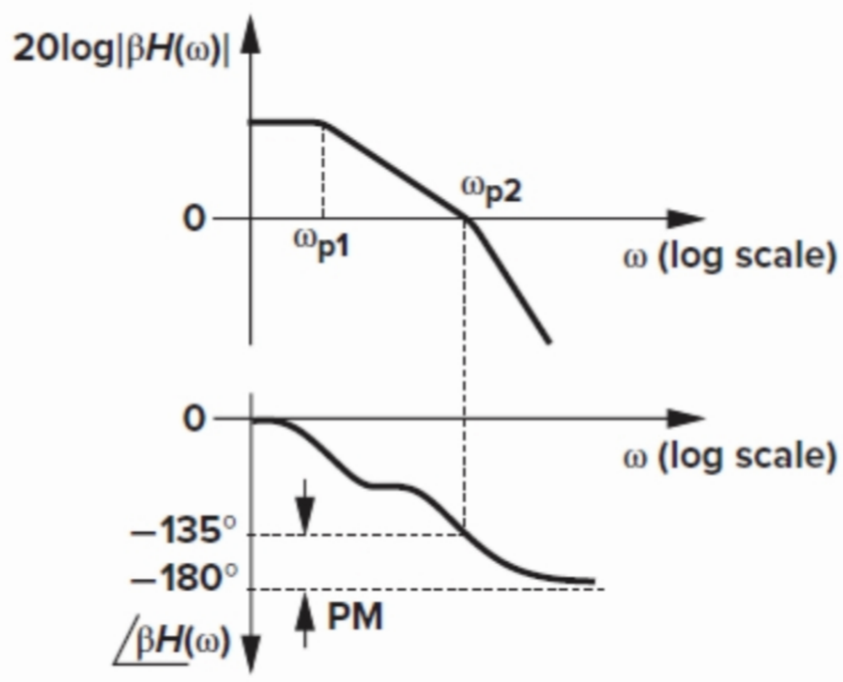

显然为 $180° - 135° = \underline{45°}$