Exercise 2

2-1 The circuit shown in Fig.2.1 illustrates a single-channel MOS resistor with a W/L of 2μm/2μm. Using Table.2.1 model parameters calculate the small-signal on resistance of the MOS transistor at various values for V_S and fill in the table below. (Note that the transistor was in linear region, V_B=0, I_{DS}=0)

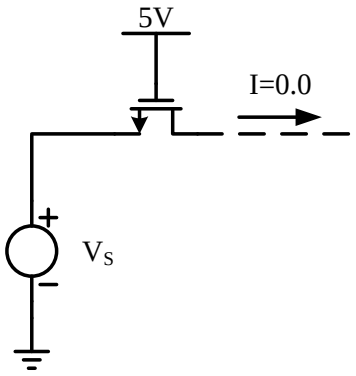

V_S(V)	R(Ω)
0.0	
1.0	
2.0	
3.0	
4.0	
5.0	

Fig.2. 1

2-2 An NMOS with W=50μm and L=0.5μm operates in the saturated region and its layout is folded shown as Fig. 2.2. Calculate the all capacitances by using the parameters in Table2.2 and C_{ox}=3.8×10^{-3} F/m, V_R=0.6V. Assume that the minimum size (lateral) of S/D region is 1.5μm

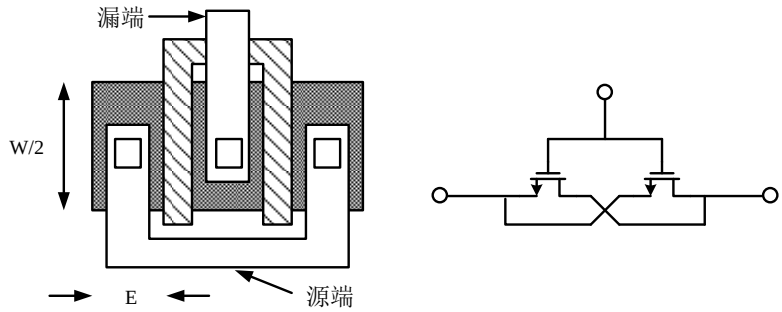

Fig.2. 2

2-3 There is an N-type current source, I_D is 0.5mA, and the drain-source voltage V_{DS} must more than 0.4V when it works as a current source. If the minimum output resistance is 20 KΩ, determine the length and width of the device by using the parameters in Table.2.2.

2-4 A “ring” MOS structure is shown in Fig.2.3. Explain how the device operations and estimate its equivalent aspect ratio. Calculate the drain junction capacitance of the structure. (use Cj and Cjsw)

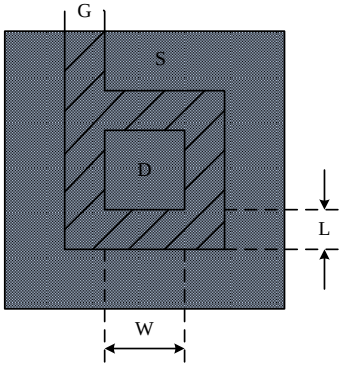

Fig.2. 3

2-5 Find the small-signal model (g_m, g_{mb}, g_{ds}) for an n-channel transistor with the drain at 4 V, gate at 4 V, source at 2 V, and the bulk at 0 V. Assume the model parameters from Table.2.1, and W/L = 10 μm/1 μm.

Table.2. 1

Typical Parameter Value				
Parameter Symbol	Parameter Description	n-Channel	p-Channel	Units
V_{T0}	Threshold voltage(V_{BS}=0)	0.7	-0.8	V
K	Transconductance parameter(in saturation)	134	50	$\mu A/V^2$
γ	Bulk threshold parameter	0.45	0.4	$V^{1/2}$
λ	Channel length modulation parameter	0.1	0.2	V^{-1}
$2\lvert\phi_F\rvert$	Surface potential at strong inversion	0.9	0.8	V

$*K' = \frac{1}{2}\mu C_{ox}$

Table.2.2

NMOS Model			
LEVEL=1	VTO=0.7	GAMMA=0.45	PHI=0.9
PSUB=9e+14	LD=0.08e-6	UO=350	LAMBDA=0.1
TOX=9e-9	PB=0.9	CJ=0.56e-3	CJSW=0.35e-11
MJ=0.45	MJSW=0.2	CGDO=0.4e-9	JS=1.0e-8
PMOS Model			
LEVEL=1	VTO=-0.8	GAMMA=0.4	PHI=0.8
PSUB=5e+14	LD=0.09e-6	UO=100	LAMBDA=0.2
TOX=9e-9	PB=0.9	CJ=0.94e-3	CJSW=0.32e-11
MJ=0.5	MJSW=0.3	CGDO=0.3e-9	JS=0.5e-8

上表给出的是 0.5μm 工艺 level 1 MOS SPICE 模型参数的典型值，其中的参数定义如下：

VTO:	VSB=0 时的阈值电压	（单位：V）
GAMMA:	体效应系数	（单位：$V^{1/2}$）
PHI:	$2\Phi_F$	（单位：V）
TOX:	栅氧厚度	（单位：m）
NSUB:	衬底掺杂浓度	（单位：cm^{-3}）
LD:	源/漏侧扩散长度	（单位：m）
UO:	沟道迁移率	（单位：cm2/(v/s)）
LAMBDA:	沟道长度调制系数	（单位：V^{-1}）
CJ:	单位面积的源/漏结电容	（单位：F/m^2）
CJSW:	单位长度的源/漏侧壁结电容	（单位：F/m）
PB:	源/漏结内建电势	（单位：V）
MJ:	CJ 公式中的幂指数	（无单位）
MJSW:	CJSW 等式中的幂指数	（无单位）
CGDO:	单位宽度的栅/漏交叠电容	（单位：F/m）
CGSO:	单位宽度的栅/源交叠电容	（单位：F/m）
JS:	源/漏结单位面积的漏电流	（单位：A/m^2）