Exercise 3

3-1. Consider the circuit of Fig.3.1.

a) Using the simple model with V_{Don} = 0.7V, solve for I_D;

b) Find I_D and V_D using the ideal diode equation. Use $I_S = 10^{-14}$ A and T=300 K.

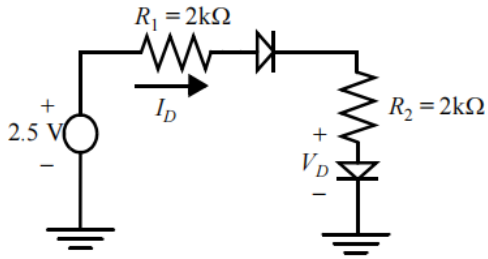

Fig.3.1

3-2. For the circuit in Fig.1.2, V_s=3.3 V. Assume A_D = 12 μm^2, φ_0 = 0.65 V, and m= 0.5, $N_A = 2.5\times10^{16}$ cm^{-3}, $N_D = 5\times10^{15}$ cm^{-3} and $\varepsilon_{si} = 11.7\varepsilon_0$, $\varepsilon_0 = 8.85\times10^{-12} F/m$.

a) Is the diode forward- or reverse-biased?

b) Find I_D and V_D;

c) Find the depletion region width, W_j, of the diode;

d) Use the parallel-plate model to find the junction capacitance, C_j;

e) Set V_s = 1.5 V. Again using the parallel-plate model, explain qualitatively why C_j increases.

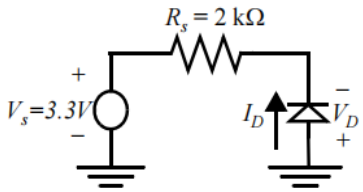

Fig.3.2

3-3. Fig.3.3 shows NMOS and PMOS devices with drains, source, and gate ports annotated. Determine the operation region (saturation, linear, or cutoff) and the drain current I_D for each of the biasing configurations given in table. Assume the model parameters from Table.3.1, V_{BS}=0 and W/L = 1, L=1μm fill the table

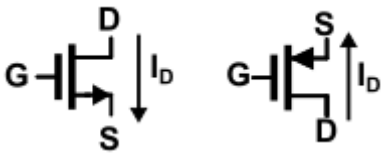

Fig.3.3

	V_{GS}(V)	V_{DS}(V)	Operation region	I_D (μA)
NMOS	2.5	2.5		
	3.3	2.2		
	0.6	0.1		
PMOS	-0.5	-1.25		
	-2.5	-1.8		
	-2.5	-0.7		

3-4. An NMOS device is plugged into the test configuration shown below in Fig .3.4 The input V_{in} is 2V. The current source draws a constant current of 50 μA. R is a variable resistor between 10kΩ and 30 kΩ. Transistor M1 has following transistor parameters: k'= 110μA/V^2, V_T = 0.7V, and V_{DSAT} = 0.6V, and has a W/L = 2.5μ/0.25. For simplicity, the body effect and channel length modulation can be neglected, i.e λ=0, γ=0.

a) When R =10kΩ find the operation region, V_D and V_S.

b) For the case of R = 10kΩ, would V_S increase or decrease if $\lambda \neq 0$. Explain qualitatively.

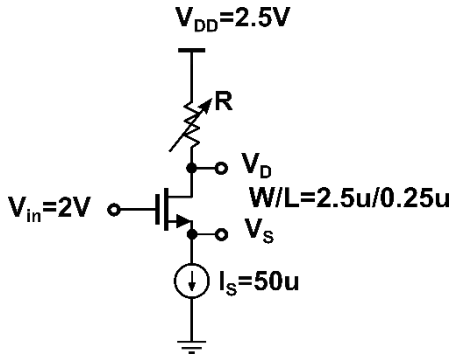

Fig.3.4

Thinking Questions(optional)

3-5. Show that two MOS transistors connected in parallel with channel widths of W_1 and W_2 and identical channel lengths of L can be modeled as one equivalent MOS transistor whose width is W_1+W_2 and whose length is L, as shown in Fig.3.5 Assume the transistors are identical except for their channel widths.

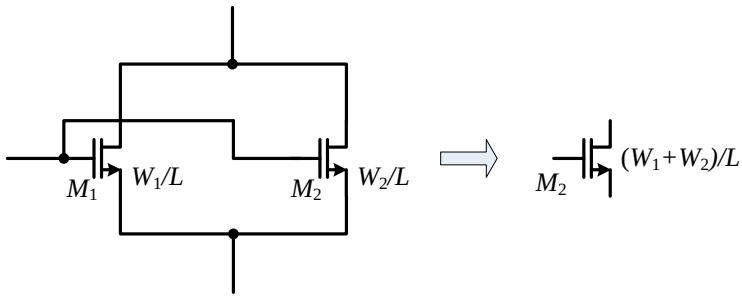

Fig.3.5

3-6. Show that two MOS transistors connected in series with channel lengths of L_1 and L_2 and identical channel widths of W can be modeled as one equivalent MOS transistor whose width is W and whose length is L_1+L_2, as shown in Fig. 3.6. Assume the transistors are identical except for their channel lengths. Ignore the body effect and channel-length modulation.

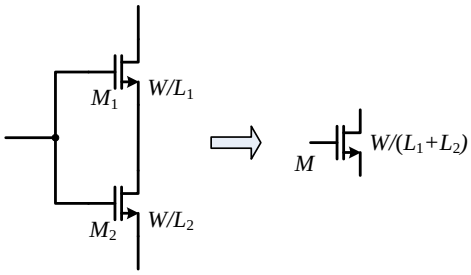

Fig.3.6

Table.3.1

Parameter Symbol	Parameter Description	Typical Parameter Value		Units
		n-Channel	p-Channel	
V_{T0}	Threshold voltage ($V_{BS}=0$)	0.7	−0.7	V
K'	Transconductance parameter (in saturation)	110.0	50.0	$\mu A/V^2$
γ	Bulk threshold parameter	0.4	0.57	$V^{1/2}$
λ	Channel length modulation parameter	0.04 (L=1μm) 0.01 (L=2μm)	0.05 (L=1μm) 0.01 (L=2μm)	V^{-1}
$2\|\Phi_F\|$	Surface potential at strong inversion	0.7	0.8	V

$*K' = \frac{1}{2}\mu C_{ox}$