Exercise 5

Table 5.1

		Typical Parameter Value		
Parameter Symbol	Parameter Description	n-Channel	p-Channel	Units
V_{T0}	Threshold voltage(V_{BS}=0)	0.7	-0.8	V
K	Transconductance parameter(in saturation)	134	50	$\mu A/V^2$
γ	Bulk threshold parameter	0.45	0.4	$V^{1/2}$
λ	Channel length modulation parameter	0.1	0.2	V^{-1}
$2\|\phi_F\|$	Surface potential at strong inversion	0.9	0.8	V

$* K = \mu C_{OX}$

5.1 Calculate the output resistance and the minimum output voltage, while maintaining all devices in saturation, for the circuits shown in Figure 5.1. Assume that i_{OUT} is actually 10μA. Use Table 5.1 for device model information. V_{bs}=0 V.

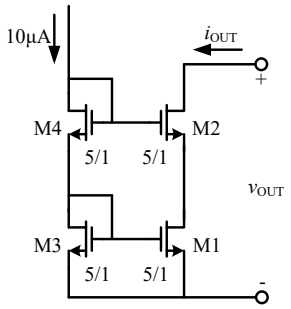

Fig 5.1

5.2 A reference circuit is shown in figure 5.2, assume that $(W/L)_1=(W/L)_2=(W/L)_3=4$, $(W/L)_4=1$, please calculate the symbolic expression of V_{REF}.（已知各管处于饱和区且各管阈值电压为 Vt）

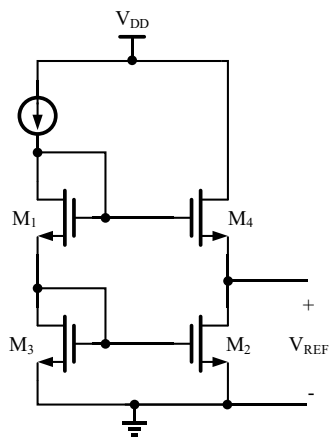

Figure 5.2

5.3 As the circuits shown in Figure 5.3, I_{REF}=0.3mA and γ=0. Using the model parameters in Table 5.1,

(a) Calculate the voltage V_b when V_X=V_Y.

(b) If V_b is 100mV smaller than the value in (a), calculate the deviation of I_{out} from 300 μ A.

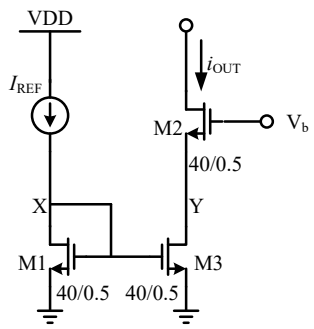

Figure 5.3

5.4 Design M3 and M4 of Figure 5.4(a) so that the output characteristics are identical to the circuit shown in Figure 5.4(b). It is desired that i_{OUT} is ideally 10uA.

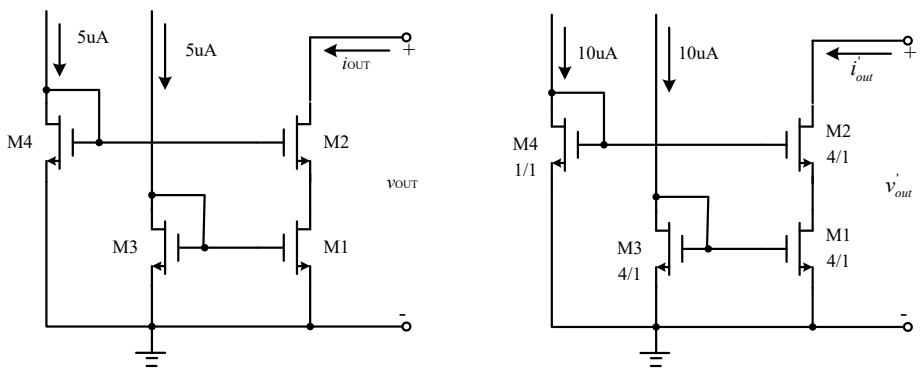

(a) (b)

Figure 5.4