Table 7.1

		Typical Parameter Value		
Parameter Symbol	Parameter Description	n-Channel	p-Channel	Units
V_{T0}	Threshold voltage(V_{BS}=0)	0.7	-0.8	V
K	Transconductance parameter(in saturation)	134	50	$\mu A/V^2$
γ	Bulk threshold parameter	0.45	0.4	$V^{1/2}$
λ	Channel length modulation parameter	0.1	0.2	V^{-1}
$2\|\phi_F\|$	Surface potential at strong inversion	0.9	0.8	V

$K = \mu C_{OX}$

7.1 Assume that W/L ratios of Figure 7.1 are $(W/L)_1$ = 2μm/1μm and $(W/L)_2 = (W/L)_3 = (W/L)_4$ =1μm/1μm. Find the dc value of v_{IN} that will give a dc current in M1 of 110μA. Calculate the small signal voltage gain and output resistance using the parameters of Table 7.1. Assume λ=γ=0.

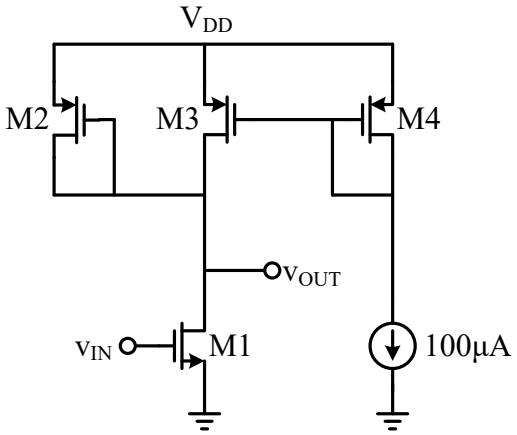

Figure 7.1

7.2 Suppose the common-source stage of Fig 7.2 is to provide an output swing from 1V to 2.5V. Assume that $(W/L)_1$ = 50/0.5, R_D = 2kΩ, V_{DD} = 3V and λ = 0. Use model parameters in Table 7.1.

a) Calculate the input voltages that yield V_{out} = 1V and V_{out} = 2.5V.

b) Calculate the drain current and the transconductance of M_1 for both cases.

c) How much does the small-signal gain, g_mR_D, vary as the output goes from 1V to 2.5V?

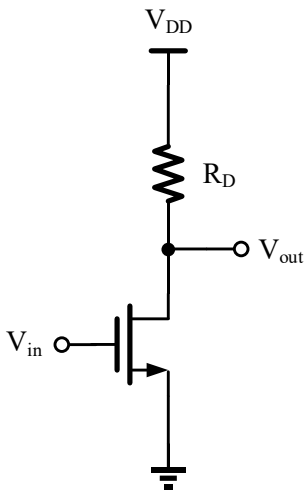

Figure 7.2

7.3 Consider the circuit of Fig 7.3 with $(W/L)_1 = 50/0.5$ and $(W/L)_2 = 10/0.5$. Assume that $\lambda = \gamma = 0$, $V_{DD} = 3V$.

a) At what input voltage is M_1 at the edge of the triode region? What is the small-signal gain under this condition?

b) When V_{out} is 0.66 V, what is the small-signal gain under this condition?

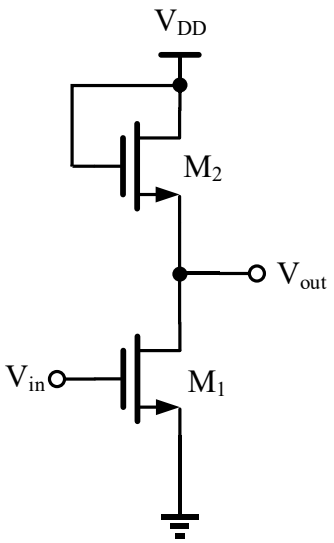

Figure 7.3

7.4 In the circuit of Fig 7.4, $(W/L)_1 = 20/0.5$, $I_1 = 1mA$, and $I_S = 0.75mA$. Assuming $\lambda = 0$, $V_{DD} = 3V$, calculate $(W/L)_2$ such that M_1 is at the edge of triode region. What is the small-signal voltage gain under this condition? Use model parameters in Table 7.1.

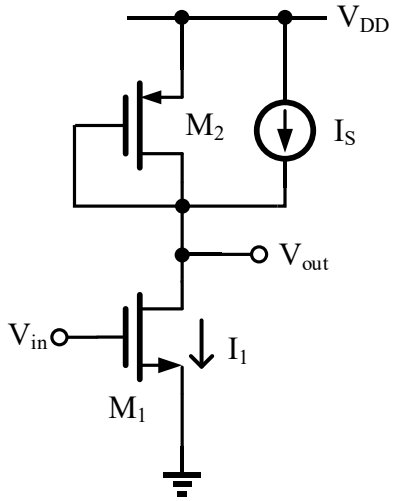

Figure 7.4

7.5 Consider the circuit of Fig 7.5 with $(W/L)_1 = 50/0.5$, $R_D = 2k\Omega$, and $R_S = 200\ \Omega$, $V_{DD} = 3V$. Use model parameters in Table 7.1.

a) Calculate the small-signal voltage gain if $I_D = 0.5mA$.

b) Assuming that $\lambda = \gamma = 0$, calculate the input voltage that places M1 at the edge of the triode region. What is the gain under this condition?

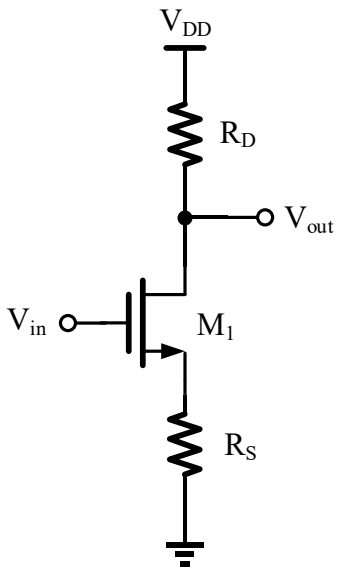

Figure 7.5