Table 8.1

		Typical Parameter Value		
Parameter Symbol	Parameter Description	n-Channel	p-Channel	Units
V_{T0}	Threshold voltage(V_{BS}=0)	0.7	-0.8	V
K	Transconductance parameter(in saturation)	134	50	$\mu A/V^2$
γ	Bulk threshold parameter	0.45	0.4	$V^{1/2}$
λ	Channel length modulation parameter	0.1	0.2	V^{-1}
$2\|\phi_F\|$	Surface potential at strong inversion	0.9	0.8	V

$K = \mu C_{OX}$

8.1 Calculate the differential transconductance g_{md} and the differential voltage gain A_v of an n-channel input differential amplifier shown in Figure 8.1 , with the parameters shown in table 8.1. Consider I_{ss}=100μA (the drain current of M5), and $W_1/L_1=W_2/L_2=W_3/L_3=W_4/L_4=1$. Assuming all the channel lengths are equal to 1μm, and V_{DD}=5V. If $W_1/L_1=W_2/L_2=10W_3/L_3=10W_4/L_4=10$, repeat the calculation

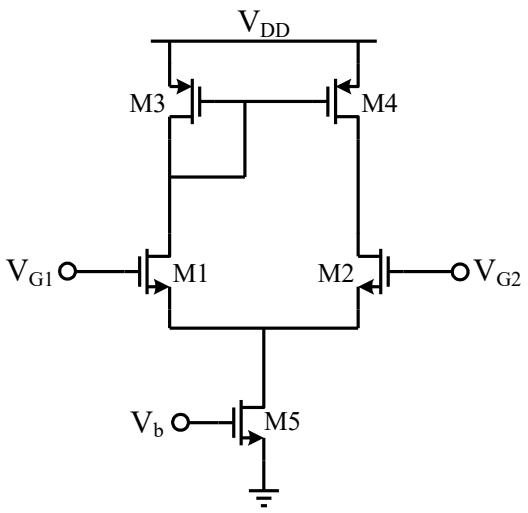

Figure 8.1

8.2 Calculate the maximum(V_{IC}(max)) and the minimum input common-mode voltages (V_{IC}(min)), and the input common mode voltage range (ICMR) of an n-channel input differential amplifier shown in Figure 8.1, with the parameters shown in table 8.1. Assume all MOSFETs are in saturation, all the $(W/L)_i$ are equal to 10μm/1μm, I_{SS}=10μA, and V_{DD}=5V.

8.3 Find the value of the unloaded differential-transconductance, g_{md}, and the unloaded differential-voltage gain, A_v, for the p-channel input differential amplifier of Figure 8.2 when I_{SS}=10μA and I_{SS}=1μA. What is the slew rate of the differential amplifier if a 100 pF capacitor is attached to the output? Assuming $W_1/L_1=W_2/L_2=W_3/L_3=W_4/L_4=1$, and all the channel lengths are equal to 1μm. Use the transistor parameters of Table 8.1.

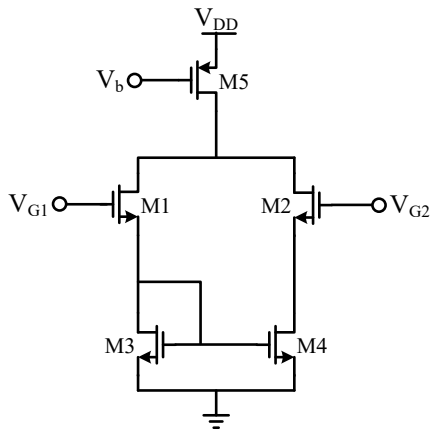

Figure 8.2

8.4 In the circuit of Fig 8.3, assume that I_{SS}=1mA, V_{DD}=3V and W/L=50/0.5 for all the transistors. And $I_{D5}=I_{D6}=0.8(I_{SS}/2)$. Assuming **λ≠0**.

(a) Determine the voltage gain.

(b) Calculate V_b.

(c) If I_{SS} requires a minimum voltage of 0.4V, what is the maximum differential output swing?

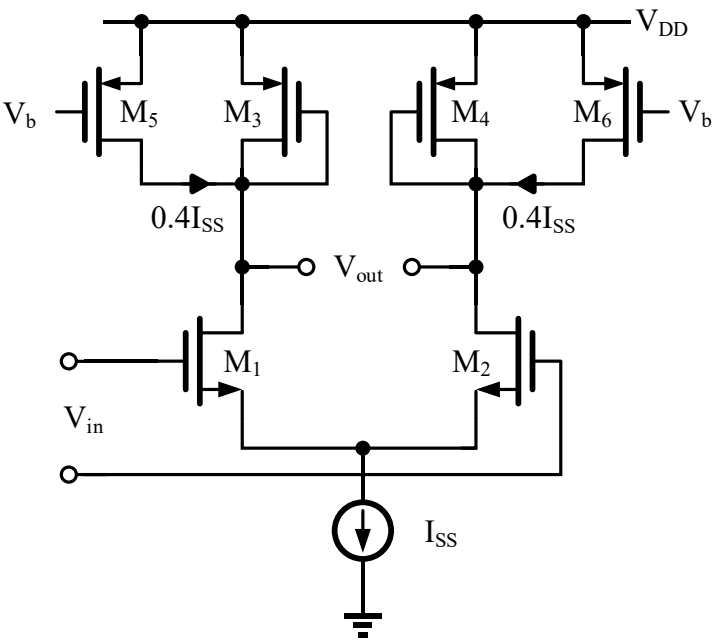

Figure 8.3

8.5 The circuit shown in Figure 8.4 called a folded-current mirror differential amplifier and is useful for low values of power supply. Assume that all W/L values of each transistor is 100. Using the parameters shown in table 8.1,

a) Find the maximum input common mode voltage, V_{IC}(max) and the minimum input common mode voltage, V_{IC}(min). Keep all transistors in saturation for this problem.

b) What is the input common mode voltage range, ICMR?

c) Find the small signal voltage gain, v_{out}/v_{in}, if $v_{in} = v_1 - v_2$.

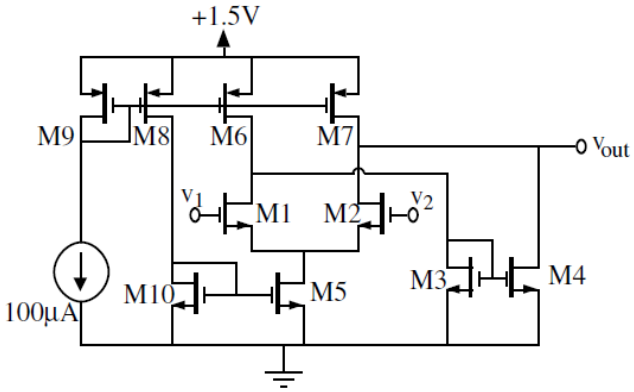

Figure 8.4

8.6 In the circuit of Fig 8.5, assume that I_{SS} = 0.5mA, V_{DD} = 3V, $(W/L)_{1,2}$ = 50/0.5 and $(W/L)_{3,4}$ = 10/0.5. I_{SS} current is provided by NMOS, and its W/L = 50/0.5. Assuming **λ≠0**.

a) Calculate the range of input common mode voltage.

b) If $V_{in,CM}$ = 1.5V, draw a sketch of the small signal differential voltage gain of the circuit when V_{DD} changes from 0 to 3V.

c) If the mismatch threshold voltage of M_1 and M_2 is 1mV, calculate CMRR.

d) If the W_3 = 10µm and W_4 = 11µm, calculate CMRR.

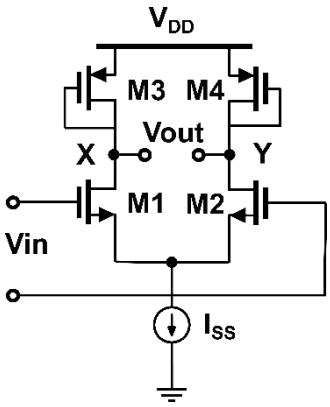

Figure 8.5

8.7 A two-pole feedback system is designed such that $|\beta H(\omega_{p2})| = 1$ and $|\omega_{p1}| << |\omega_{p2}|$ (Figure 8.6). How much is the phase margin?

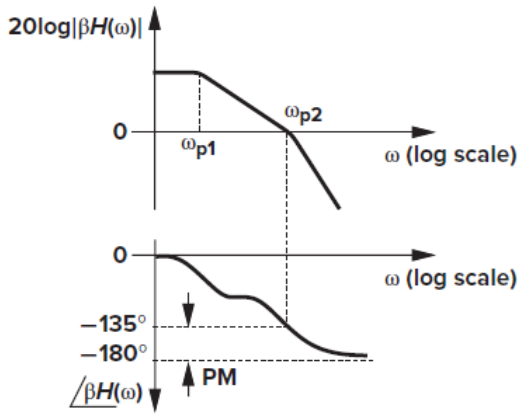

Figure 8.6